ARTICLE 10

TECHNICAL SPECIFICATIONS

for

Section 10 WRP

Blower Buildings Improvements

City of Bullhead City, Arizona
Utility Division

Project No. 27-U-001

April 2026

Volume 2 of 3

Morrison Maierle
engineers ▪ surveyors ▪ planners ▪ scientists

1 Engineering Place
Helena, MT 59602
(406) 442-3050

ARTICLE 10

TECHNICAL SPECIFICATIONS

FOR

SECTION 10 WRP
BLOWER BUILDINGS IMPROVEMENTS

CITY OF BULLHEAD CITY, ARIZONA
UTILITY DIVISION

PROJECT NO. 27-U-001

Prepared by:

Morrison-Maierle, Inc.
1 Engineering Place
Helena, MT 59601
Phone: (406) 442-3050

April 7, 2026

Written By: E. Schmeltzer Checked By: E. Blanksma

Approved by: Jason C. Mercer, P.E.
Project Manager

PROJECT NO: 8519.017 00

TABLE OF CONTENTS
SECTION 10 WRP BLOWER BUILDINGS IMPROVEMENTS
BULLHEAD CITY, ARIZONA

VOLUME 2 – TECHNICAL SPECIFICATIONS

SECTION	TITLE
	DIVISION 01 - GENERAL REQUIREMENTS
01 11 00	Summary of Work
01 14 16	Coordination and Site Conditions
01 19 00	Abbreviations and Reference Standards
01 29 76	Measurement and Payment
01 33 00	Submittals
01 40 00	Quality Control
01 50 00	Construction Facilities and Temporary Controls
01 66 00	Product Handling, Storage, and Protection
01 66 40	Manufacturer's Services
01 77 00	Contract Closeout
	DIVISION 02 – EXISTING CONDITIONS
02 01 90	Move-In and Site Prep
02 41 10	Demolition and Salvage
02 41 20	Removal of Existing Pavement, Concrete, Curb, Sidewalk, Driveway, and/or Structures
	DIVISION 03 – CONCRETE
03 11 00	Concrete Forming and Accessories
03 15 00	Expansion, Construction, and Control Joints
03 20 00	Concrete Reinforcement
03 30 00	Concrete
	DIVISION 04 – MASONRY
04 23 00	Reinforced Hollow Unit Masonry
	DIVISION 05 - METALS
05 12 00	Structural Steel
05 14 00	Structural Aluminum
05 50 00	Miscellaneous Metal Items
	DIVISION 06 – WOOD, PLASTICS, AND COMPOSITS
06 10 00	Rough Carpentry
06 13 00	Metal Plate Connected Wood Trusses

TABLE OF CONTENTS
SECTION 10 WRF BLOWER BUILIDNGS IMPROVEMENTS
BULLHEAD CITY, ARIZONA

DIVISION 07 – THERMAL AND MOISTURE PROTECTION

07 11 13 Bituminous Dampproofing
07 21 00 Building Insulation
07 32 13 Clay Tile Roofing
07 62 00 Flashing and Sheet Metal
07 90 00 Caulking and Sealants

DIVISION 08 – OPENINGS

08 11 13 Standard Steel Doors and Frames
08 33 23 Overhead Coiling Doors
08 71 00 Finish Hardware
08 80 00 Glass and Glazing

DIVISION 09 – FINISHES

09 90 00 Painting
09 29 00 Gypsum Board

DIVISION 10 – SPECIALTIES

10 14 00 Identifying Devices
10 43 52 Portable Fire and Safety Equipment

DIVISION 22 – PLUMBING

22 01 00 General Requirements of Plumbing

DIVISION 23 – HEATING, VENTILATION, AND AIR CONDITIONING (HVAC)

23 05 93 Testing, Adjusting, and Balancing for HVAC
23 07 13 Duct Insulation
23 31 13 Metal Ducts
23 33 00 Air Duct Accessories
23 33 30 Louvers
23 37 13 Grilles, Registers, and Diffusers
23 81 19 Packaged Air Handling Units

DIVISION 26 – ELECTRICAL

26 00 10 General Electrical Requirements
26 00 50 Basic Materials and Methods
26 05 19 Low Voltage Electrical Power Conductors and Cables
26 05 26 Grounding and Bonding
26 05 29 Hangers and Supports
26 05 33 Raceways and Boxes
26 05 44 Sleeves and Sleeve Seals for Electrical Systems
26 05 48.16 Seismic Controls for Electrical Systems
26 05 53 Identification for Electrical Systems
26 05 74 Overcurrent Protective Device Coordination

TABLE OF CONTENTS
SECTION 10 WRF BLOWER BUILIDNGS IMPROVEMENTS
BULLHEAD CITY, ARIZONA

26 09 23	Lighting Control Devices
26 22 13	Low Voltage Distribution Transformers
26 24 13	Switchboards
26 24 16	Panelboards
26 24 19	Motor Control Centers
26 27 26	Wiring Devices
26 28 13	Fuses
26 28 16	Enclosed Switches
26 29 13.03	Manual and Magnetic Motor Controllers
26 43 13	Surge Protection
26 51 00	LED Lighting

DIVISION 31 - EARTHWORK

31 11 00	Clearing and Grubbing
31 23 00	Earthwork for Structures
	Appendix – Geotechnical Information
31 23 23	Flowable Fill
31 23 33	Trench Excavation and Backfill for Pipelines and Appurtenant Structures

DIVISION 32 – EXTERIOR IMPROVEMENTS

32 10 10	Street Excavation, Backfill, and Compaction
32 12 16	Asphalt Concrete Pavement
32 40 00	Surface Restoration

DIVISION 40 – PROCESS INTERCONNECTIONS

40 02 05	Piping Schedule
40 05 10	Piping – General
40 05 10.04	DPS: Mill Type Steel Pipe and Fittings
40 05 10.09	DPS: Stainless Steel Pipe and Fittings
40 05 53	Manual Valves
40 60 10	Process Instrumentation and Control System – General
40 60 10.01	PICS: Loop Descriptions
40 60 10.02	PICS: Equipment

DIVISION 43 – PROCESS LIQUID AND GAS HANDLING EQUIPMENT

43 05 50	Relocation of Existing Turbo Blowers
43 11 20	Air Foil Bearing Turbo Blower
43 11 33	Rotary Lobe Blowers

DRAWINGS

Bound under separate cover – Volume 3

END OF TABLE OF CONTENTS

PART 1 GENERAL

1.01 GENERAL

A. This section describes the project and the work to be performed under this Contract in a general summary. Detailed requirements and extent of work are stated in applicable Specification sections and are shown on the Drawings.

B. These requirements supplement and are in addition to the requirements in Volume 1 Article 8.43 and 8.50.

1.02 ORGANIZATION AND INTERPRETATION OF CONTRACT DOCUMENTS

A. Specifications and Drawings included in these Contract Documents establish the performance, quality requirements, location and general arrangement of materials and equipment, and establish the minimum standards for quality of workmanship and appearance.

B. Specification sections have not been divided into groups for work of subcontractors or various trades. Should there be questions concerning the applicability or interpretation of a particular section or part of a section or Drawing, direct questions to the Engineer.

C. Piping work and electrical work shown on the Drawings is intended to be depictive and may not be an exact and complete representation of the actual finished work. Include fittings, joints, supports, nuts, bolts, and other accessories required to provide complete and satisfactory piping and electrical systems, as specified even though some items may not be specifically shown on the Drawings.

D. Any part of the work that is necessary or required to make each installation satisfactory and operable for its intended purpose, even though it is not specifically included in the Specifications or on the Drawings, shall be performed as incidental work as if it were described in the Specifications and shown on the Drawings.

1.03 STANDARD SPECIFICATIONS

A. The Uniform Standard Specifications and Details for Public Works Construction, Maricopa Association of Governments (MAG), 2023 Revision to the 2020 Edition, January 2023, are referred to elsewhere in this document as MAG Standard Specifications.

B. Where a specification section from MAG Standard Specifications is referenced, it shall be understood that the section is thereby made a part of

these Contract Documents even though the section is not printed in this Project Manual. Special provisions or technical specification provisions that supplement or supersede referenced MAG Standard Specifications sections are included within this Project Manual and take precedence over any conflicts with the MAG Standard Specifications.

1.04 WORK BY OTHERS

A. Normal wastewater system operations by Owner's personnel. Also see Section 01 14 16, COORDINATION AND SITE CONDITIONS. Coordinate Work with utilities of the Owner and other pertinent public or private agencies.

1.05 DESCRIPTION OF PROJECT

A. The Contractor shall, except as otherwise specifically stated in applicable parts of these Contract Documents, provide and pay for all labor, materials, equipment, tools, construction equipment, bypass equipment, temporary equipment, facilities, and services necessary for the proper execution, testing, and completion of the work.

B. This project will provide the Owner with two new blower buildings equipped with air piping, HVAC systems, electrical power and controls and connections to an on-site emergency generator and generally consists of the following major items of work:

1. Construction of two new blower buildings consisting of site excavation, building construction, mechanical, electrical, and control systems, installation of new yard piping, and providing connections to existing systems.

2. Relocation of existing blower equipment for the Aeration Basin Blower Building, furnishing and installation of new blower equipment in the Aeration Basin Blower Building.

3. Furnishing and installation of new blower equipment for the Digester Blower Building.

4. Grading and site work associated with the improvements in and around the new buildings.

5. Protecting the existing process air system during construction and until the new buildings are constructed and the equipment is installed/relocated and operational. This may include temporary air piping if deemed necessary to aid in construction sequencing.

6. Connect the new and existing equipment to existing plant power, SCADA, and plant control systems. Coordinate with the City's SCADA provider for programming and startup of the equipment.

7. Other miscellaneous work, including demolition, as shown on the Drawings.

1.06 OWNER-FURNISHED PRODUCTS

A. The following major equipment is currently in operation and will be relocated by the Contractor as shown on the Drawings and as specified further in these Contract Documents:

1. Two (2) Aerzen Turbo Blowers and accessories

2. Owner's responsibilities include:

a. Arrange for and deliver Owner-reviewed shop drawings, product data to Contractor.
b. Arrange for manufacturer's warranties, inspections, and service.

3. Contractor's responsibilities include:

a. Review Owner-supplied shop drawings and product data.
b. Inspect the existing installation for completeness and any existing damage jointly with the Owner.
c. Handle, store, install and finish products as specified in other sections of these Contract Documents.
d. Repair or replace items damaged after moving the equipment to its new location.

1.07 PROVISIONS FOR FUTURE CONSTRUCTION

A. The work shall make provisions for future construction as shown on the Drawings. Coordinate this work as specified on the Drawings and/or in Section 01 14 16, COORDINATION AND SITE CONDITIONS.

B. Installation of future blowers in both buildings.

1.08 LOCATION AND INSPECTION OF SITE

A. The work shall occur in the areas as shown on the Drawings which are within the site of the Section 10 Water Reclamation Plant (WRP). The plant is located west of Highway 95, at the end of Richardo Avenue in Bullhead City, Arizona.

1.09 TIME FOR COMPLETION AND LIQUIDATED DAMAGES

A. Time for completion shall be as specified in Volume 1.

B. Liquidated damages shall be as specified in Volume 1.

1.10 ENGINEERING SERVICES

A. The Owner has established control points for horizontal and vertical control. Existing facilities are located with respect to this control. The Contractor shall be responsible for maintaining the established control points. The Contractor shall be responsible to provide all other horizontal and vertical control to complete the work.

B. The control points have been established at the project site. The cost of replacing survey stakes, markers, etc. damaged or destroyed after the initial staking will be done by the Contractor at his own expense.

C. The Owner or Engineer may perform independent and separate compaction density tests, concrete sampling and testing, bacteriological testing, or other testing as he (they) may decide.

1.11 BOUNDARIES OF WORK

A. The Owner shall make suitable provisions for ingress and egress, and the Owner shall not cause the Contractor to enter or occupy with workers, tools, equipment or material, any ground outside the property of the Owner without the written consent of the owner of such ground. The final location and extent of the areas to be used shall be coordinated with the Owner. Other contractors and employees or agents of the Owner may for all necessary purposes enter upon the premise used by the Contractor, providing the operations of other contractors do not interfere with the actual scheduled operations. The Contractor shall conduct his work so as not to impede unnecessarily any work being done by others on or adjacent to the site.

B. It shall be understood that the responsibility for protection and safekeeping of equipment and materials on or near the site will be entirely that of the Contractor and that no claim shall be made against the Owner or the Engineer by reason of any act of an employee or trespasser. It shall be further understood that should any occasion arise necessitating access by the Owner to the sites occupied by these stored materials and equipment, the Contractor owning or responsible for the stored materials or equipment shall immediately remove same. No materials or equipment may be placed upon the property of the Owner until the Owner has agreed to the location contemplated by the Contractor to be used for storage.

C. The Contractor shall be solely responsible for obtaining and shall pay all costs in connection with any additional work area, storage sites, access to the site, or temporary right-of-way, which may be required for proper completion of the work.

1.12 PROTECTION OF SITE

A. Except as otherwise provided herein, the Contractor shall take all necessary precautions and provide all material and equipment to protect, shore, brace, support and maintain all public and private property in the proximity or otherwise affected by the construction work performed by him. The Contractor shall remove from the site all unused materials.

B. Existing underground installations such as water mains, gas mains, sewers, telephone lines, power lines, and buried structures in the vicinity of the Work to be done hereunder are indicated on the Drawings only to the extent such information has been made available to or discovered by the Engineer in preparing the Drawings. There is no guarantee as to the accuracy or completeness of such information, and all responsibility for the accuracy and completeness thereof is expressly disclaimed.

C. The Contractor shall be solely responsible for locating all existing underground installations, including service connections, in advance of excavating or trenching, by contracting the owners thereof and prospecting. The Contractor shall use his own information and shall not rely solely upon information shown on the Drawings concerning existing underground installations.

D. The Contractor shall protect utilities during excavation that are to remain in place. Contractor shall repair all damage to existing utilities or property to the satisfaction of the utility owner or property owner at his own expense.

E. Should uncharted, or incorrectly charted, piping or other utilities be encountered during excavation, consult utility owner immediately for directions. If any existing underground utility or facility not shown on the Drawings is located so that it interferes with the Work in either alignment or grade and has to be moved or otherwise modified, such work shall be done by the Contractor, and adjustment in payment will be made according to the General Conditions. Except as stated above, any delay, additional work or extra cost to the Contractor caused by existing underground installation shall not constitute a claim for extra work, additional payment, or damages.

F. Privately owned utilities, such as gas mains, underground electrical and telephone cables, telephone poles, light poles, etc., required to be moved to make way for new construction will be moved by others unless designated otherwise on the Drawings. However, the Contractor shall be

responsible for contacting all utility companies associated with this project to determine additional costs that may be associated with these utilities. These costs shall be incidental to the bid price.

G. Temporary service shall be provided by the Contractor during any period when utility lines are disturbed unless the Contractor makes other arrangements with the utility users. Existing utility lines, if interrupted, shall be restored as quickly as possible. Do not interrupt existing utility services without written permission from Engineer and Owner and utility service owner. Planned interruptions must be scheduled with the Owner and utility service owner a minimum of 7 calendar days prior to the interruption, and as further specified in Section 01 14 16, COORDINATION AND SITE CONDITIONS.

H. Contractor shall exercise special care to maintain all existing surroundings in an undamaged condition, such as buildings, fences, structures, etc., unless noted to be removed on the Drawings. Contractor shall not use the existing features as anchors to fasten ropes, chains, or guys without written approval. All damages to existing structures and features shall be restored to the original condition, or better condition, at no additional expense to the Owner.

I. Where excavation will be required adjacent to existing structures, utilities, sidewalks, pavements or other facilities, the Contractor shall be solely responsible to protect and maintain the structural integrity of the existing structures. The Contractor shall take whatever means necessary to ensure that the existing structure is not damaged by settlement, lateral movement, undermining, washout and other hazards created by earthwork operations. Any delay, additional work, or extra cost to the Contractor caused by existing underground installations shall not constitute a claim for extra work, additional payment or damages.

J. Any fences destroyed during construction shall be repaired to the original condition, or better condition, than the condition prior to construction. Unless otherwise noted on the Drawings, all existing ditches and drainage swales disturbed by construction shall be restored to their original size, alignment, and grade.

K. The dimensions and elevations of existing structures and locations of existing fences, pipelines, conduits, cables, and equipment shown on the Drawings were taken for the most part from available records and survey data and are not guaranteed for accuracy. It shall be the responsibility of the Contractor to check all dimensions and elevations of existing structures, pipelines, conduits, cables, equipment, or other existing items, both above and below ground, affected by or affecting the Work under this contract, prior to the start of construction or ordering materials and equipment

affected thereby. The Contractor's attention is directed to the additional bidding information which encourages that each bidder visits the site of the Work to become familiar with the arrangement and condition of existing construction that is to be connected to or that is to remain in place.

L. Also see Section 01 14 16, COORDINATION AND SITE CONDITIONS.

1.13 TEMPORARY FACILITIES

A. The Contractor shall be responsible for supplying his own office, toilet and storage facilities at the site. The Contractor shall also be responsible for providing potable water and water needed for construction and testing purposes. All expenses for connection of electrical service, telephone or other temporary services shall be the responsibility of the Contractor. The Contractor shall remove all traces of these facilities prior to completion of the project.

B. Also see Volume 1 for additional temporary facility requirements.

1.14 SUBSURFACE CONDITIONS AND SITE DRAINAGE

A. The Contractor shall satisfy himself as to the groundwater and subsurface conditions at the site of the Work. Soil moisture contents and groundwater levels will fluctuate due to seasonal changes, weather, irrigation, and other variations in conditions. Soils with natural moisture contents in excess of optimum are anticipated at some locations on this project. The bidders shall make independent investigations as they believe are necessary to prepare their bid. The Contractor is responsible to determine construction methods and include these costs in the bid price. Methods and procedures related to wet soils could include adjusting the moisture of the material or removal of the wet material and replacement with another suitable material.

B. The Contractor is advised that groundwater may be present at the project site. The Contractor is responsible for providing dewatering equipment and methods for this project. Groundwater shall be removed from the project area to satisfactorily prevent the rising of water into or around the new or any existing piping and/or structures that may be exposed during the Work. The Contractor shall be responsible for arrangements of permits and obtaining of sites for groundwater discharge or flushing discharge. This shall include all cleanup, restoration, etc., of any discharge areas. The above-related Work shall be included as part of the total bid price. No separate measurement or payment will be made for dewatering.

C. Water from such sources as surface runoff, dewatering, and flushing of pipelines during project construction shall not be allowed to enter into

drainage ways or open areas that will cause flooding of existing structures, roads, equipment storage areas, agricultural areas, or lawn areas.

D. Also Volume 1 for environmental quality control requirements.

1.15 SITE ACCESS

A. The Contractor shall be responsible for determining the adequacy of all roads and bridges used in moving equipment and materials to the construction site. The Contractor shall provide alternative methods of access, such as temporary crossings, for any equipment that exceeds the capacity of existing access facilities.

1.16 SAFETY

A. The Contractor shall be solely responsible for all project personnel on the jobsite. No acts or comments by the Engineer or Owner shall be interpreted as a transfer of responsibility for safety.

B. See Volume 1 for additional jobsite safety requirements.

1.17 WORK SEQUENCE

A. Construct Work in phases to accommodate Owner's operation of the Section 10 WRP during construction. Coordinate construction schedule with Engineer, Owner and also see Section 01 14 16, COORDINATION AND SITE CONDITIONS:

1. Construct new blower buildings.

2. Make connections to existing air piping and install valving to control air flow from the existing blowers.

3. Install one of the Owner supplied turbo blowers along with Contractor procured materials and equipment, test and confirm function in the aeration blower building.

4. Move second existing turbo blower into the aeration blower building, test and confirm function.

5. Test and complete startup of contractor supplied blower equipment in the new digester blower building.

6. Isolate and disconnect the existing digester blowers from the system and operate the new digester blowers.

PART 2 PRODUCTS (NOT USED)

PART 3 EXECUTION (NOT USED)

END OF SECTION 01 11 00

(This page intentionally left blank)

PART 1 GENERAL

1.01 SECTION INCLUDES

A. Requirements for coordinating and sequencing the work under the Contract, and requirements regarding existing site conditions. These requirements supplement and are in addition to requirements in Article 8 and Article 9 of Volume 1.

B. Requirements for cutting and patching of new and existing work.

C. Specific requirements regarding coordination of mechanical equipment and electrical work are specified in Division 23, Division 26, and Divisions 46.

1.02 RELATED SECTIONS

A. Volume 1 temporary construction facilities.

B. Section 02 01 90, MOVE IN AND SITE PREPARATION.

1.03 JOBSITE COORDINATION

A. Project Site Coordination: All project site coordination (i.e. equipment staging, storage, site access, wastewater reclamation plant operation, etc.) should be discussed and coordinated with Tim Fontenot, Utility Manager, 901 Richardo Avenue, (928) 763-7299.

B. Owner may perform additional work related to this project himself, or he may let other direct contracts therefore which shall contain General Conditions and General Requirements similar to these. Contractor shall afford the other contractors who are parties to such direct contracts, (or Owner if he is performing the additional work himself), reasonable opportunity for the introduction and storage of materials and equipment and execution of work and shall properly connect and coordinate his work with theirs.

C. If any part of Contractor's work depends on proper execution or results from the work of any such other contractor (or Owner), Contractor shall inspect and promptly report to Owner and Engineer in writing any defects or deficiencies in such work that renders it unsuitable for such proper execution and results. Contractor’s failure to so report shall constitute an acceptance of the other work as fit and proper for the relationship of his work except as to defects and deficiencies which may appear in the other work after the execution of his work.

D. Contractor shall do all cutting, fitting, and patching of their work that may be required to make its several parts come together properly and fit it to receive or be received by such other work. Contractor shall not endanger any work of others by cutting, excavating, or otherwise altering their work and will only cut or alter their work with the written consent of the Engineer and of the other contractors whose work will be affected.

E. If the performance of additional work by other contractors or Owner is not noted in the Contract Documents prior to the execution of the Contract, written notice thereof shall be given to Contractor prior to starting any such additional work. If Contractor believes that the performance of such additional work by Owner or others involves them in additional expense or entitles them to an extension of the contract time, Contractor may make a claim therefore.

F. Contractor shall be responsible for all areas of the site used by them and all Subcontractors in performance of the work. Contractor shall exert full control over the actions of all employees and other persons with respect to the use and preservation of property and existing facilities, except such controls as may be specifically reserved to Owner or others.

G. Contractor and all Subcontractors shall cooperate in the coordination of their separate activities in a manner that will provide the least interference with the Owner's operations and utility companies working in the area, and in the interfacing and connection of the separate elements of the overall project work. If any difficulty or dispute should arise in the accomplishment of the above, the problem shall be brought immediately to the attention of the Owner and Engineer. All Contractors working on this site are subject to this requirement for cooperation, and all shall abide by the Engineer's decision in resolving project coordination problems without additional cost to the Owner.

1.04 SUBMITTALS

A. Contractor shall submit the following information as applicable to coordination activities:

1. Subsurface Information and Utilities:

a. Records or logs of borings or test holes made by Contractor, if any.
b. Results of exploratory excavations made to verify locations and nature, shape, dimensions, etc., of existing utilities and facilities; where possible, indicate this information on clean copy of Contract Drawings.

2. Field Relocation: Clearly show proposed relocations of new or existing facilities, or related work affected by the relocation, on clean copy of the Contract Drawings submitted prior to performing the relocation.

3. Easements: Copy of easements and other agreements obtained from utilities and property owners as required to carry out the work.

4. Connecting Work: Proposed methods of connecting new work to existing facilities, where not shown or specified.

5. Cutting and Patching:

   a. Written notice requesting consent to perform cutting which may affect structural safety or normal functioning of existing facilities.
   b. Recommendations indicating changed conditions, alternative materials or methods, time when uncovered work may be observed, and other information necessary to evaluate substitutions when work conditions necessitate change of materials or methods.

6. Detailed schedule of proposed sequence of work meeting the requirements of this section and Section 01 33 00, SUBMITTALS. Schedule shall clearly identify all interfacing work and dates that existing facilities must be modified, connected to, and/or taken out of service.

1.05 SITE CONDITIONS

A. Information on Site Conditions:

1. General: Information obtained by the Owner regarding site conditions, topography, subsurface information, groundwater elevations, existing construction of site facilities as applicable, and similar data is included in the Contract Documents or will be available for inspection at the office of the Engineer or Owner upon request. Such information is offered as supplementary information only. Neither the Engineer nor the Owner assumes any responsibility for its accuracy or completeness or for the Contractor's interpretation of such information.

2. Subsurface Information: Subsurface investigations at the site have not been performed. It shall be the responsibility of the Contractor to verify subsurface conditions prior to bidding on the work.

3. Control Points: Contractor shall check existing and establish new (if desired) vertical and horizontal survey control points on structures and improvements located in the vicinity of the work prior to beginning work. Contractor shall check the points for movements when directed by the Engineer. Furnish Engineer with copies of survey notes for each survey and a copy of the layout of survey control points.

B. Existing Utilities:

1. Location:

a. Known utilities and facilities adjacent to or within the work area are shown on the Drawings. The locations shown are taken from existing records and the best information available from existing utility plans; however, it is expected that there may be some discrepancies and omissions in the locations and quantities shown. Contractor's request for additional compensation or Contract time resulting from encountering utilities not shown will be considered as set forth in the General Conditions.

b. Contractor shall exercise reasonable care to verify locations of utilities and facilities shown on the Drawings and to determine the presence of those not shown. Immediate and adjacent areas where excavations are to be made shall be thoroughly checked by visual examination for indications of underground facilities and also checked with electronic metal and pipe detection equipment. Where there is reasonable cause to verify the presence or absence of an underground facility, make exploratory excavations prior to proceeding with major excavation in the area. Where information on buried facilities is required to verify their nature, shape, configuration, dimensions, materials, or other properties, make exploratory excavations as acceptable to the Owner and Engineer.

c. The Contractor is advised that there is a one-call utility locate number in use for utility location requests within the State of Arizona.

2. Contractor's Responsibilities:

a. Where Contractor's operations could cause damage or inconvenience to telephone, television, power, oil, gas, water, sewer, irrigation systems, or other similar utilities, the Contractor shall make arrangements necessary for the protection of these utilities and services. Replace existing

utilities removed or damaged during construction with equal or better materials, unless otherwise provided for in these Contract Documents.

b. Notify utility offices that are affected by construction operations at least 48 hours in advance. Under no circumstances shall Contractor expose any utility without first obtaining permission from the appropriate agency and utility owner. Once permission has been granted, locate, expose, and provide temporary support for the utilities.

c. Protect all utility poles from damage. If interfering utility poles will be encountered, notify the utility company at least 3 days in advance of construction operations to permit necessary arrangements with the utility company for protection. If relocation of the interfering pole is needed, this must be coordinated with the utility company such that the schedule allows the utility company to perform this work.

d. Contractor shall be solely and directly responsible to owner and operator of such properties for damage, injury, expense, loss, inconvenience, delay, suits, actions, or claims of any character brought because of injuries or damage which may result from construction operations under this Contract.

e. Neither Owner nor its officers or agents shall be responsible to Contractor for damages as a result of Contractor's failure to protect utilities or associated facilities encountered in the work.

f. In event of interruption to domestic water, sewer, storm drain, or other utility services as a result of accidental damage due to construction operations, promptly notify the Owner and/or proper authority. Cooperate with Owner and said authority in restoration as promptly as possible and pay for repair. Prevent interruption of utility service unless granted by the utility owner.

g. Drainage culverts removed by the Contractor during the course of the Work shall be replaced in kind.

C. Interfering Structures:

1. Take necessary precautions to prevent damage to existing structures whether on the surface, above ground, or underground. An attempt has been made to show major structures on the Drawings. While the information has been compiled from the best available sources, its completeness and accuracy cannot be guaranteed.

2. Protect existing structures from damage, whether or not they lie within limits of easements obtained by the Owner. Where existing fences, gates, sheds, buildings, or other structures must be removed to properly carry out work, or are damaged during work, restore them to original, or better, condition than present prior to construction.

3. Contractor may remove and replace in equal or better than original condition, small structures such as fences, mailboxes, and signposts that interfere with Contractor's operations.

D. Field Relocation:

1. During construction, it is expected that relocations of proposed facilities will be necessary. Make such relocations only by direction of the Owner or Engineer. If existing structures are encountered that prevent construction as shown, notify the Engineer before continuing with work so Engineer may make necessary field revisions.

2. Where shown or directed by and acceptable to the Engineer and Owner, provide relocation of existing facilities to include piping, utilities, equipment, structures, electrical conduit wiring, electrical duct bank, and other miscellaneous items. Use only new materials for relocation of existing facilities. Match materials of existing facilities unless otherwise shown or specified. Perform relocations to minimize downtime of existing facilities. Install new portions of existing facilities in their relocated position prior to removing existing facilities, unless otherwise accepted by Engineer.

E. Monuments and Markers:

1. Preserve and protect survey monuments and markers throughout construction. If damage occurs or removal becomes necessary, immediately notify Engineer and restore monument or marker to original condition.

2. Preserve private and public monuments that are found. If monument must be removed, replace at original locations using registered land surveyor. Notify Engineer when monuments are encountered. If government monuments are encountered, reference the monument for later replacement and provide 10-day advance notification to Engineer who will notify the proper authority.

F. Connecting to Existing Facilities: Unless otherwise shown or specified, determine methods of connecting new work to existing facilities, and obtain Engineer's review and acceptance of connections:

1. Determine location, elevation, nature, materials, dimensions, and configurations of existing facilities where necessary for connecting new work.

2. Inspect existing record drawings and shop drawings, conduct exploratory excavations and field inspections, and conduct similar activities as needed.

3. Shutdown of Owner's existing facility prior to connection, if necessary, shall be by Owner as specified hereinafter. Provide notice to Owner of a planned shutdown as specified hereinafter.

G. Erosion and Dust Control On-Site:

1. The Contractor shall be responsible for reducing soil erosion and dust due to wind or water to a level meeting federal, state, and local regulations at the construction site. Control measures that may be required include, but may not be necessarily limited to, the following:

a. Suspending excavation during high winds or rain.
b. Minimizing land exposure in area and time.
c. Covering erodible areas as quickly as possible with gravel landscaping or by compaction.
d. Retaining existing vegetation where possible.
e. Prohibiting clearing or grubbing until a firm construction schedule is known.
f. Stabilizing construction site soils.
g. Controlling dust during construction by use of water spray.

2. Also see Volume 1.

H. Salvage of Materials:

1. Contractor shall salvage materials for Owner’s and/or Contractor’s use where shown on the Drawings. Store salvaged materials for Owner where instructed by Owner on the jobsite.

1.06 PROJECT MEETINGS OR REPORTS

A. Preconstruction Conference: A preconstruction conference will be scheduled after the Notice of Award. The Contractor and their major Subcontractors shall attend the meeting.

B. Progress Meetings: The Owner or Engineer may schedule regular progress meetings approximately every two (2) weeks to review work progress, schedules, and other matters needing discussion and resolution.

C. Progress Reports: A monthly progress report shall be provided with an updated schedule by the Contractor prior to the submission of the application for progress payment. If the work falls behind schedule, Contractor shall submit progress reports at such intervals as the Owner or Engineer may request. Each progress report shall include sufficient narrative to describe current and anticipated delaying factors, their effect on the construction schedule, and proposed corrective actions. Any work reported complete, but which is not readily apparent to the Engineer must be substantiated with satisfactory evidence.

D. Purpose of Meetings and Reports: The purpose of the meetings or reports will be to review the general progress of work, maintain coordination of efforts, discuss changes in scheduling, and resolve other problems which develop. At a minimum, each meeting must be attended by the Contractor's Project Manager, Resident Project Superintendent and representatives of major Subcontractors.

1.07 SEQUENCE OF WORK

A. Operation and Shutdown of Existing Facilities:

1. Continuous operation of Owner's facilities is of critical importance. Schedule and conduct activities to enable existing facilities to operate continuously, unless otherwise specified. Conduct work outside normal working hours as may be necessary to meet project schedule and avoid undesirable conditions within limits specified in the Owner's contract documents.

2. Provide at least 21 days advance notice to Owner of need to shut down a process, pipeline, or facility unless specified otherwise hereinafter. Do not proceed with work affecting a facility's operation without obtaining Owner's advance approval of the need for, and duration of, such work.

3. It must be stressed that wastewater must continue to flow throughout the treatment plant and must and shall continue to receive treatment in accordance with the State of Arizona Aquifer Protection Permit (APP) and Arizona Pollutant Discharge Elimination System (AZPDES) permit. At no time shall non-compliant wastewater be allowed to be discharged. The Contractor will be afforded the opportunity to select the appropriate means and methods of construction to accomplish the construction and continue providing treatment, within the specific constraints specified hereinafter.

4. Provide temporary devices, pumps, piping, equipment, electric service, and other similar items as may be required to accomplish the work and maintain continuous and efficient plant operation.

B. Modifications to Existing Facilities:

1. Where existing facilities are to be modified during the course of work, obtain Owner's and Engineer's review and acceptance of submittals for temporary shutdown, demolition, modification, connections between new and existing work, and other related work. Conform to other sections as applicable.

2. Connections to existing services or utilities, or other work that requires the temporary shutdown of any existing operations of utilities shall be planned in detail with appropriate scheduling of the work and coordinated with the Owner and Engineer. The schedule for shutdown or restart shall be given by written advance notice in order that the Owner or Engineer may witness the shutdown, tie-in, and startup.

3. All materials and equipment (including emergency equipment) necessary to expedite the tie-in shall be on hand prior to the shutdown of existing services or utilities. Where bypass pumping is required, the Contractor shall have equipment of adequate capacity to meet maximum anticipated flow rates with one “unit” in standby mode.

4. Unless otherwise specified or indicated, Contractor shall make all necessary connections to existing facilities including structures, pipelines, and utilities such as water, telephone, gas, and electric. In each case, Contractor shall obtain permission from the Owner or the owning utility prior to undertaking connections. Contractor shall protect facilities against deleterious substances and damage.

5. Connections to existing facilities which are in service shall be thoroughly planned in advance, and all required equipment, materials, and labor shall be on hand at the time of undertaking the connections. All equipment, materials, and labor that the Contractor plans to have available shall be coordinated with the Owner and Engineer in order to ensure the work is done in the minimum amount of time.

6. Work shall proceed continuously (around the clock) if necessary to complete connections in the minimum time. Operation of valves or

other appurtenances on existing facilities, when required, shall be by or under the direct supervision of the Owner.

7. Existing valves or gates used to isolate certain structures may not be watertight and some leakage may occur. The Contractor shall provide the necessary temporary plugs and/or pumping facilities to handle any leakage.

8. Temporary dams, stop logs, stop gates, valves, wall or other devices shall be designed and installed by the Contractor as needed for installation of the work.

9. The Contractor shall design and install shoring and support of existing and new structures and piping to prevent damage during the work and to maintain functional use of the Owner's facilities.

C. The following major existing facilities will need to be modified as part of the work, as shown on the Drawings and as necessary to accomplish the work. This work must be carefully planned and coordinated with the Owner and Engineer as specified herein. This work shall also be performed as specified in other appropriate detail specifications.

1. Process Air Piping: Connections to the existing process air piping will be necessary for both buildings. This will require coordination with City staff on downtime for process air to the aeration basin or existing digesters. Downtime must be limited to three (3) hours within one 24-hour period, so as not to cause an upset in the treatment processes. In general, the Contractor shall work to make these connections and construct all necessary thrust restraints in the minimum time. Temporary thrust restraints shall be provided by the Contractor for all connections required by the Owner to be placed back into service immediately.

2. Electrical and Control: Various connections or modifications to the electrical distribution system and process control system will be required in order to accommodate the new/expanded facilities. See Electrical (E) Drawings. The Owner will be providing SCADA programming services to modify the existing SCADA system to operate the new headworks equipment. The Contractor will provide the necessary conduits, wiring and equipment to connect the new equipment into the existing SCADA system.

D. Sequence of Major Activities: To meet the overall objectives of the project, certain elements of work must be accomplished within the following sequence and/or constraints. The following is meant to be a guideline for

the Contractor which presents one method of accomplishing the desired results and includes major items of work. Exact means and methods of accomplishing the Work within these constraints is the responsibility of the Contractor. It is the responsibility of the Contractor to review these items and the work to be done and determine the methods that will be used to accomplish the tasks. The Contractor shall also submit proposed methods to the Owner and Engineer for review prior to commencing work. The Contractor is still responsible for the methods used to accomplish the project objectives and all safety requirements.

1. Construct new electrical service and buildings, including mechanical and electrical systems, while protecting the existing process air and existing blowers maintaining their operation. Install new turbo blower in the Aeration Basin Blower Building and fully connect to electrical. Install new digester blowers in the Digester Blower Building and fully connect to electrical.

2. Test new piping and valving and blowers for function and operation within new buildings and new piping for process air outside of buildings.

3. Install temporary fittings and appurtenances as needed to allow for connection of new buildings to existing process piping until new blowers are installed and tested.

4. Commission new blowers and take into service to provide process air the aeration basin and digester basins.

5. Relocation of existing turbo blowers into new aeration basin blower building. The blower shall be installed and tested for function and operation prior to moving the next turbo blower.

6. Sever connections to existing blower building.

7. Disconnect existing digester blowers from process air system.

E. Miscellaneous Piping Connections: All piping connection work shall be planned and coordinated with the Owner and Engineer as specified hereinbefore and shall be performed during a time of the day when influent wastewater flows are expected to be at a minimum. In general, the Contractor shall work continuously to make these connections and construct all necessary thrust blocks in the minimum time. Temporary thrust restraints shall be provided by the Contractor and high early strength concrete shall be used for all connections required by the Owner to be

placed back in service immediately. The temporary thrust restraints shall be left in place until the thrust block concrete has reached its design strength.

F. Time of Work:

1. All provisions of the Contract shall remain in effect except Article 8.62 shall allow for the maintenance or emergency work may be done without prior permission.

1.08 REQUESTS FOR INTERPRETATIONS (RFI)

A. Procedure: Immediately on discovery of the need for interpretation of the Contract Documents, and if not possible to request interpretation at a Project meeting, prepare and submit an RFI in the form specified.

1. RFIs shall originate with Contractor. RFIs submitted by entities other than Contractor will be returned with no response.

2. Coordinate and submit RFIs in a prompt manner so as to avoid delays in Contractor's work or work of subcontractors.

B. Content of the RFI: Include a detailed, legible description of item needing interpretation and the following:

1. Project name.

2. Date.

3. Name of Contractor.

4. Name of Engineer.

5. RFI number, numbered sequentially.

6. Specification Section number and title and related paragraphs, as appropriate.

7. Drawing number and detail references, as appropriate.

8. Field dimensions and conditions, as appropriate.

9. Contractor's suggested solution(s). If Contractor's solution(s) impact the Contract Time or the Contract Sum, Contractor shall state impact in the RFI.

10. Contractor's signature.

11. Attachments: Include drawings, descriptions, measurements, photos, Product Data, Shop Drawings, and other information necessary to fully describe items needing interpretation.

    a. Supplementary drawings prepared by Contractor shall include dimensions, thicknesses, structural grid references, and details of affected materials, assemblies, and attachments.

C. Engineer's Action: Engineer will review each RFI, determine action required, and return it. Allow seven working days for Engineer's response for each RFI. RFIs received after 1:00 p.m. will be considered as received the following working day.

1. The following RFIs will be returned without action:

    a. Requests for approval of submittals.
    b. Requests for approval of substitutions not provided within the normal submittal process.
    c. Requests for coordination information already indicated in the Contract Documents.
    d. Requests for adjustments in the Contract Time or the Contract Sum.
    e. Requests for interpretation of Engineer's actions or submittals.
    f. Incomplete RFIs or RFIs with numerous errors.

2. Engineer's action may include a request for additional information, in which case Engineer's time for response will start again.

3. Engineer's action on RFIs that may result in a change to the Contract Time or the Contract Sum may be eligible for Contractor to submit Change Proposal according to the General Conditions.

    a. If Contractor believes the RFI response warrants change in the Contract Time or the Contract Sum, notify Engineer in writing within seven working days of receipt of the RFI response.

D. On receipt of Engineer's action, update the RFI log and immediately distribute the RFI response to affected parties. Review response and notify Engineer within seven working days if Contractor disagrees with response.

E. RFI Log: Prepare, maintain, and submit a tabular log of RFIs organized by the RFI number. Submit log monthly, include the following:

1. Project name.

2. Name and address of Contractor.

3. Name and address of Engineer.

4. RFI number including RFIs that were dropped and not submitted.

5. RFI description.

6. Date the RFI was submitted.

7. Date Engineer's response was received.

8. Identification of related Minor Change in the Work, Construction Change Directive, and Proposal Request, as appropriate.

9. Identification of related Field Order, Work Change Directive, and Proposal Request, as appropriate.

PART 2 PRODUCTS (NOT USED)

PART 3 EXECUTION

3.01 CUTTING AND PATCHING

A. General:

1. Execute cutting (including excavating), fitting, or patching of work, required to:

   a. Make the several parts fit properly.
   b. Uncover work to provide for installation of specified work.
   c. Remove and replace defective work or work not conforming to requirements of Contract Documents.
   d. Install specified work in existing construction.

2. Perform the following upon written instruction of Engineer:

   a. Uncover work to provide for Engineer's observation of covered work.
   b. Remove work to provide for alteration of existing work.

3. Contractor shall not, without written consent of Owner or Engineer:

   a. Cut or alter work of another contractor.
   b. Cut structural or reinforcing steel.
   c. Endanger existing or new structures or facilities.

d. Shut down or disrupt existing operations.

4. Materials for replacement of work removed shall comply with applicable sections of these Specifications for corresponding type of work to be done.

5. Provide all tools and equipment required to accomplish cutting and patching.

B. Inspection and Preparation:

1. Inspect existing conditions of work, including elements subject to movement or damage during cutting, patching, excavating, and backfilling.

2. After uncovering work, inspect conditions affecting installation of new products.

3. Prior to cutting, provide safety protection.

C. Procedures:

1. Execute fitting and adjustment of products to provide finished installation to comply with specified tolerances and finishes.

2. Execute excavating and backfilling as specified in Section 31 23 33, TRENCH EXCAVATION AND BACKFILL FOR PIPELINES AND APPURTENANT STRUCTURES.

3. Restore work which has been cut or removed; install new products and provide completed work in accordance with specified requirements.

4. Restore structures and surfaces damaged that are to remain in the completed work including concrete- embedded piping, conduit, and other utilities.

5. Make restorations with new materials and appropriate methods as specified for new work of similar nature; if not specified, use best recommended practice of manufacturer or appropriate trade association.

6. Restore damaged work so there is a secure and intimate bond or fastening between new and old work. Finish restored surfaces to such planes, shapes, and textures that no transition between new and old work is evident in finished surfaces.

3.02 ELECTRICAL AND CONTROLS GENERAL COORDINATION

A. All modifications to the electrical distribution system and control system must be completed prior to placing new/modified facilities into service. Service continuity must be maintained except for brief outages for cut-overs.

B. The standby power system's service continuity must be continuously maintained, except for brief cut-over periods. Provide temporary standby generation for any other required shutdown periods. Any temporary standard generation system shall include automatic transfer capability.

END OF SECTION 01 14 16

PART 1 GENERAL

1.01 SUMMARY

A. This section lists many of the construction industry organizations, professional and technical associations, societies and institutes, and government agencies issuing, promoting, or enforcing standards to which references may be made in the Contract Documents along with the abbreviations commonly used for those references. Also included are certain general requirements for the use of industry standards specified, and for application of the standards in quality control.

1.02 USE OF REFERENCE STANDARDS

A. Work specified by reference to the published standard or specification of a government agency, technical association, trade association, professional society or institute, testing agency, or other organization shall conform to or surpass the minimum standards of quality for materials and workmanship established by the designated standard or specification.

B. Where so specified, products or workmanship shall also conform to the additional prescriptive or performance requirements included within the Contract Documents to establish a higher or more stringent standard of quality than that required by the referenced standard.

C. Where the specific date or issue of the standard is not included with the reference to the standard, the edition, including all amendments published and available on the first published date of the Invitation to Bid, shall apply, except where the specific date is established by code.

D. Where two or more standards are specified to establish quality, the product and workmanship shall conform to or surpass the requirements of both.

E. In case of conflict between referenced standards, the more stringent shall apply.

F. Where both a standard and a brand name are specified for a product in the Contract Documents the proprietary product names shall conform to or surpass the requirements of the specified reference standard. The listing of a trade name in a Contract Document shall not be construed as warranting that such product conforms to the respective reference standard.

G. Copies of standards:

1. Copies of applicable referenced standards have not been bound in this Contract Document.

2. Where copies of standards are needed by the Contractor for superintendence and quality control of the work, obtain a copy or copies directly from the publication sources and maintain in an orderly manner at the job site, available to the Contractor personnel, Sub-Contractors, Owner, and Engineer.

3. Submittals: Submit for approval the requests to use products conforming to printed standards or publications with a different publication date from that effective under the Contract. Clearly indicate the changes in product or workmanship quality involved in the proposed change, if any, and reasons for the request.

1.03 ABBREVIATIONS

A. Abbreviations for Trade Organizations and Government Agencies: Following is a list of construction industry organizations and government agencies to which references may be made in the Contract Documents, with abbreviations used. Not all abbreviations may be used on this project.

AA	Aluminum Association
AAMA	Architectural Aluminum Manufacturers' Association
AASHTO	American Association of State Highway and Transportation Officials
ACI	American Concrete Institute
AFBMA	Anti-Friction Bearing Manufacturers' Association
AGA	American Gas Association
AGMA	American Gear Manufacturers' Association
AISC	American Institute of Steel Construction
AISI	American Iron and Steel Institute
AITC	American Institute of Timber Construction
ALS	American Lumber Standards
AMCA	Air Moving and Conditioning Association
ANSI	American National Standards Institute
APA	American Plywood Association
API	American Petroleum Institute
AREA	American Railway Engineering Association
ARI	Air Conditioning and Refrigeration Institute
ASAE	American Society of Agricultural Engineers
ASCE	American Society of Civil Engineers
ASHRAE	American Society of Heating, Refrigerating and Air Conditioning Engineers, Inc.
ASME	American Society of Mechanical Engineers
ASSE	American Society of Sanitary Engineers
ASTM	American Society for Testing and Materials
AWI	Architectural Woodwork Institute

AWPA	American Wood Preservers' Association
AWPB	American Wood Preservers' Bureau
AWPI	American Wood Preservers' Institute
AWS	American Welding Society
AWWA	American Water Works Association
BHMA	Builders Hardware Manufacturers' Association
CBMA	Certified Ballast Manufacturers' Association
CDA	Copper Development Association
CGA	Compressed Gas Association
CISPI	Cast Iron Soil Pipe Institute
CMAA	Crane Manufacturers' Association of America
CRSI	Concrete Reinforcing Steel Institute
FGMA	Flat Glass Marketing Association
FM	Factory Mutual
Fed Spec.	Federal Specifications
FS	Federal Specification
GA	Gypsum Association
HI	Hydraulic Institute
HMI	Hoist Manufacturers' Institute
IBC	International Building Code
ICBO	International Conference of Building Officials
ICEA	Insulated Cable Engineers' Association
IEEE	Institute of Electrical and Electronics Engineers, Inc.
IES	Illuminating Engineering Society of North America
ISA	Instrument Society of America
JIC	Joint Industry Conferences of Hydraulic Manufacturers
MIA	Marble Institute of America
Mil.Sp.	Military Specification
MS	Military Specifications
MMA	Monorail Manufacturers' Association
NAAMM	National Association of Architectural Metal Manufacturers
NBHA	National Builders' Hardware Association
NEC	National Electrical Code
NEMA	National Electrical Manufacturers' Association
NESC	National Electrical Safety Code
NFPA	National Fire Protection Association
NHLA	National Hardwood Lumber Association
NLMA	National Lumber Manufacturers' Association
NSF	National Sanitation Foundation
NTMA	National Terrazzo and Mosaic Association
NWMA	National Woodwork Manufacturers' Association
OECI	Overhead Electrical Crane Institute
OSHA	Occupational Safety and Health Act (Federal and State)
PEI	Porcelain Enamel Institute

PS	Product Standards Section-U.S. Department of Commerce
RLM	RLM Standards Institute, Inc.
RMA	Rubber Manufacturers' Association
SAE	Society of Automotive Engineers
SDI	Steel Deck Institute
SDI	Steel Door Institute
SIGMA	Sealed Insulating Glass Manufacturing Association
SJI	Steel Joist Institute
SMACNA	Sheet Metal and Air Conditioning Contractors National Association
SSPC	Steel Structures Painting Council
SWI	Steel Window Institute
TEMA	Tubular Exchanger Manufacturers' Association
TCA	Tile Council of America
UBC	Uniform Building Code
UFC	Uniform Fire Code
UL	Underwriters' Laboratories, Inc.
WCLIB	West Coast Lumber Inspection Bureau
WWPA	Western Wood Products Association

PART 2 PRODUCTS (NOT USED)

PART 3 EXECUTION (NOT USED)

END OF SECTION 01 19 00

PART 1 GENERAL

1.01 SCOPE

A. This section describes the method of measurements and basis of payment for all work covered by the Contract Documents.

B. For the purposes of this Contract, this Measurement and Payment Section shall govern and take precedence over all other references to measurement and payment (with exception to the Supplementary Provisions and any addenda) referenced in these specifications or the MAG Uniform Standard Specifications.

1.02 GENERAL REQUIREMENTS REGARDING BID PRICES

A. The bid price for each item of the Contract in the Bid Form shall cover all work shown on the Drawings and required by the specifications and other Contract Documents. All costs in connection with the work, including furnishing all materials, equipment, supplies and appurtenances; providing all required construction support plants, equipment, and tools; and performing all necessary labor, testing, and supervision to fully complete the work, shall be included in the unit and/or lump sum bid prices in the Bid Form. The amounts shown on the Bid Form shall be the Contract Price.

B. No item that is required by the Contract Documents for the proper and successful completion of the work will be paid for outside of, or in addition to, the prices submitted in the bid. All work not specifically set forth as a pay item in the Bid Form shall be considered a subsidiary obligation of the Contractor and all costs in connection therewith shall be included in the prices bid.

1.03 OWNER CONTINGENCY ALLOWANCE

A. The Bid Form includes a stipulated price for use upon Owner’s concurrence and instruction as a contingency allowance. Contractor’s cost for products, delivery, installation, labor, insurance, payroll, taxes, bonding, equipment rental, overhead, and profit will be included in Change Orders authorizing expenditure of funds from this contingency allowance.

B. Funds will be withdrawn from contingency allowance only by Change Order. At closeout of Contract, funds remaining in the contingency allowance will be credited to Owner by a final Change Order.

1.04 ESTIMATED QUANTITIES

A. All estimated quantities stipulated in the Bid Form or other Contract Documents are approximate and are to be used; (1) only as a basis for estimating the probable cost of the work and (2) for the purpose of comparing the bids submitted for the work.

B. The actual amounts of work done and materials furnished under unit price items may differ from the estimated quantities. The basis of payment for work and materials will be the actual amount of work done and materials furnished to the pay lines defined in this section. The Contractor agrees that they will make no claim for damages, anticipated profits, or otherwise on account of any difference between the amount of work actually performed and materials actually furnished and the estimated amounts herein except as allowed in the Contract Documents.

1.05 SURVEYS AND MEASUREMENTS

A. All quantity measurements shall be the responsibility of the Contractor, and will be checked by the Owner and Engineer.

1.06 METHOD OF MEASUREMENT

A. No measurement of lump sum bid items contained in this Contract will be made.

B. Measurement of unit price items contained in this Contract will be made in the field by the Contractor and will be verified by the Owner or Engineer.

1.07 BASIS OF PAYMENT

A. Base Bid: The bid for the work in this Contract is a lump sum bid for all construction activities and material required to complete the work described in the Contract Documents. The lump sum bid price is broken down into the following items for the purpose of progress payments and for the information of the Owner. Payment shall be at the lump sum price bid for each item. Payment for the items shall include all labor, materials, equipment, and incidentals required to complete the item. Lump sum bid items will be paid on a periodic basis in an amount equal to the percentage of the total work deemed complete by the Engineer. The work included in each item is more completely described below:

Item 1 - Mobilization/Demobilization shall include moving equipment and other necessary work items to and from the project site. This item shall also include a temporary project sign. Payment will be at the lump sum contract price with 60 percent to be paid on the first progress payment and 40 percent paid on the final progress payment following completion and acceptance of the work.

Item 2 - Taxes, Bonds, and Insurance. This item shall include any and all taxes, bonds, and insurance costs in relation to this project together with any fees, permits, licenses, and/or other incidental regulatory costs assessed by local, state or Federal agencies as required for successful completion of this project. Payment shall be at the contract lump sum price and will be paid 100 percent upon mobilizing to the begin construction.

Item 3 - General Requirements. This item includes project coordination; scheduling; submittals; quality control; construction facilities and temporary controls; safety at the site; environmental quality control; stormwater and other permits; product shipment, handling, storage, and protection; manufacturer's services; operation and maintenance manuals; completed Record Drawings; final cleanup and contract closeout; complete. Progress payments for the work in this item will be made according to the following schedule:

Amount of Construction *Time Expended*	For Payment, the Cumulative Percentage of the Amount in the Bidder's Breakdown for the Work under *This Section Will Equal*
30 days 60 days Remainder of Project	15 percent 30 percent Equal monthly disbursements for the remainder of the project.

Items 4 to 20. All of these items are lump sum bid items with payment to be at the lump sum contract price. The price shall include all labor, materials, equipment, sitework, concrete, masonry, metals, wood, plastics, and composites, thermal and moisture protection, openings, finishes, specialties, plumbing, HVAC, electrical, earthwork, exterior improvements, process interconnections, process liquid and gas handling, demolishing, removal and abandonment of items, and etc. as applicable to complete the Work. A partial payment of up to no more than 90 percent will be allowed for work completed, but not yet tested (i.e. earthwork, concrete, concrete basins, pipelines, equipment, electrical, etc.).

Item 21 – Digester Blower Equipment. This lump sum item includes the cost for procurement of the digester blower equipment, including shipping, testing, and manufacturer services.

Item 22 – Owner Contingency. This item includes the provisions for work as outlined in Section 9.33 of Volume 1

PART 2 PRODUCTS (NOT USED)

PART 3 EXECUTION (NOT USED)

END OF SECTION 01 29 7

PART 1 GENERAL

1.01 SECTION INCLUDES

A. Submittal procedures.

B. Substitutions.

C. Construction progress schedules.

D. Proposed products list.

E. Shop drawings.

F. Product data.

G. Samples and test specimens.

H. Quality control submittals.

I. Manufacturers' instructions.

J. Manufacturers' certificates.

1.02 RELATED SECTIONS

A. Article 8 – General Conditions of Volume 1

B. Section 01 40 00, QUALITY CONTROL: Manufacturer’s field services and reports.

C. Section 01 77 00, CONTRACT CLOSEOUT: Contract closeout submittals.

D. Individual specification sections in these Contract Documents contain additional and special submittal requirements. Individual sections shall take precedence in the event of a conflict with this section.

1.03 SUBMITTAL PROCEDURES

A. These requirements supplement and are in addition to requirements in Article 8.51 and Article 9.11, Volume 1.

B. Submittal Register: The Contractor shall submit to the Engineer a register indicating the required submittal data and Contractor’s proposed submittal dates for all equipment and materials for which a submittal is required by individual specifications. It is the Contractor’s responsibility to ensure that the register is complete. The completed register shall be submitted to the

Engineer by the Contractor within fifteen (15) working days after the date of the Notice of Award.

C. General Procedures:

1. Procedures and requirements for submittals are specified herein. Owner reserves the right to modify the procedures and requirements for submittals, as necessary to accomplish the specific purpose of each submittal. Direct all inquiries to Engineer regarding the procedure, purpose, or extent of any submittal.

2. Review, acceptance, or approval of substitutions, schedules, shop drawings, lists of materials, and procedures submitted or requested by Contractor shall not add to the Contract Price amount, and additional costs which may result therefrom shall be solely the obligation of Contractor. Where Contractor suggests use of a substitution, he must demonstrate why the substitution is in the Owner's best interest and pay all associated costs for re-engineering, as required.

3. Owner is not precluded, by virtue of review, acceptance, or approval, from obtaining a credit for construction savings resulting from allowed concessions in the work or materials, therefore.

4. Owner is not responsible to provide Engineering or other services to protect Contractor from additional costs accruing from submittals.

5. Submittals processed by Engineer do not become Contract Documents and are not Change Orders; the purpose of submittal review is to establish a reporting procedure and is intended for Contractor's convenience in organizing the work and to permit Engineer to monitor Contractor's progress and understanding of the design.

6. Submittals will be acted on by the Engineer as promptly as possible and returned to the Contractor not later than the time allowed for review in the Paragraph entitled SPECIFIC SUBMITTAL PROCEDURES. Delays caused by the need for resubmittal shall not constitute basis for claim or for an extension of contract time.

7. After checking and verifying all field measurements, make submittals to Engineer, in accordance with the submittal register for review.

   a. Submittals shall bear a stamp or specific written indication that Contractor has satisfied its responsibilities under the Contract Documents with respect to the review of the submittal.

b. Data shown shall be complete with respect to quantities, dimensions, specified performance and redesign criteria, materials, and similar data to enable Engineer to review the information.
c. Submitted data shall be fully sufficient in detail for determination of compliance with the Contract Documents.

8. Before submission of each submittal, determine and verify quantities, dimensions, specified performance criteria, installation requirements, materials, catalog numbers, and similar data with respect thereto; review and coordinate each submittal with other submittals, requirements of the work, and Contract Documents.

9. At the time of each submission, provide mark-ups of the technical specification indicating each variation that the submittal may have from the requirements of the Contract Documents; if variations are not listed, it is assumed that the submitted equipment meets the specification. In addition, make specific notation on each shop drawing submitted to Engineer for review and approval of each such variation.

10. Engineer's review will be only for conformance with the design concept of the project and for compliance with the information given in the Contract Documents, not extending to means, methods, techniques, sequences, or procedures of construction (except where a specific means, method, technique, sequence, or procedure of construction is indicated in or required by the Contract Documents) nor to safety precautions or programs incident thereto. The review of a separate item as such will not indicate review of the assembly in which the item functions.

11. Engineer's review of submittals shall not relieve Contractor from responsibility for any variation from the requirements of the Contract Documents unless Contractor has in writing called Engineer's attention to each such variation at the time of submission, and Engineer has given written approval of each such variation by a specific written notation thereof incorporated in or accompanying the shop drawing or sample approval; nor will any approval by Engineer relieve Contractor from responsibility for errors or omissions in the shop drawings or from responsibility for having complied with the provisions therein.

12. Where a shop drawing or sample is required by the Specifications, related work performed prior to Engineer's review and approval of the pertinent submission shall be the sole expense and responsibility of Contractor.

13. Should the Contractor propose any item on his shop drawings, or incorporate an item into the work, and that item should subsequently prove to be defective or otherwise unsatisfactory, (regardless of the Engineer's preliminary review), the Contractor shall, at his own expense, replace the item with another item that will perform satisfactorily.

14. Review of first submittal and one resubmittal will be performed by the Engineer at no cost to the Contractor. Subsequent submittals will be reviewed by the Engineer; however, the Engineer will document the work-hours and other expenses required for such review(s) and the Contractor shall reimburse the Owner for the charges of the Engineer with a deduction from the Contractor's monthly pay estimate.

D. Specific Submittal Procedures:

1. Contractor may choose to use an Internet-based submittal service such as Procore or ConDoc. Use of such a service shall not relieve the Contractor from complying with the submittal procedures specified herein.

2. Submittals by Contractor shall be transmitted as a PDF file (as defined below).

   a. If an Internet-based submittal service is not used, for large shop drawing files greater than 20MB, submittals shall be made to an FTP site.
   b. Review comments and resubmittals are to be provided electronically, after which a minimum of two hard copies of the final and approved shop drawings are submitted for distribution. Distribution would be to the Engineer and Owner.
   c. Submittals shall be an electronic file in Adobe Acrobat Portable Document File (PDF) format created directly to PDF (preferred) or via scans of the hard copy. Scans must be legible.
   d. Electronic files that contain more than 10 pages in PDF format shall contain internal bookmarks linked from an index page to major sections of the document.
   e. General submittal information shall be added to each PDF file, including project, subject, submittal number, supplier, and keywords.
   f. PDF files shall be set up to print legibly at 8.5-inch by 11-inch, 11-inch by 17-inch, or 22-inch by 34-inch. No other paper sizes will be accepted.

g. New electronic files shall be submitted for each resubmittal, i.e., resubmit entire submittal when individual pages or portions thereof are modified.

3. Combine submittals specified in each Specification section into a single package. Partial packages will not be reviewed until all submittals required for the section have been received. If Contractor requests review of a partial submittal and Engineer accepts to assist the Contractor, all subsequent submittals shall be treated as re-submittals and the Contractor will be charged for review of the second and any subsequent re-submittals.

4. The shop drawings shall be accurate, distinct, and complete, and shall contain all required information, including satisfactory identification of items, units, and assemblies in relation to the Contract Drawings and Specifications, and as specified further hereinafter.

5. Transmit each submittal with an Engineer accepted form signed and dated by the Contractor.

6. Number the transmittal forms by specification number with a sequential suffix for each resubmittal.

7. Identify project, Contractor, subcontractor or supplier; pertinent Drawing sheet and detail number(s), and Specification section number, as appropriate.

8. Apply Contractor's stamp, signed or initialed certifying that review, verification of products required, field dimensions, adjacent construction work, and coordination of information is in accordance with the requirements of the work and Contract Documents.

9. Deliver hard copy submittals to Morrison-Maierle, Jason C. Mercer, P.E., 1 Engineering Place, Helena, Montana 59602. Coordinate submission of related items.

10. Identify variations from Contract Documents and product or system limitations which may be detrimental to successful performance of the completed work.

11. Revise and resubmit submittals as required, identify all changes made since previous submittal.

12. Distribute copies of reviewed submittals to concerned parties. Instruct parties to promptly report any inability to comply with provisions.

13. Submittals will be acted upon by Engineer and transmitted to Contractor not later than 21 regular working days after receipt by Engineer. Shop drawings shall be submitted in sufficient time to allow the Engineer not less than 21 regular working days for examining the shop drawings.

14. When shop drawings have been reviewed by the Engineer, one PDF copy will be returned to the Contractor appropriately annotated.

    a. If major changes or corrections are necessary, shop drawing may be rejected and PDF will be returned to the Contractor with such changes or corrections indicated.
    b. Correct and resubmit the shop drawings in the same manner and quantity as specified for the original submittal, unless otherwise directed by the Engineer. If changes are made by the Contractor (in addition to those requested by the Engineer) on the resubmitted shop drawings, such changes shall be clearly explained in a transmittal letter accompanying the resubmitted shop drawings.

1.04 SUBSTITUTIONS

A. Where items of equipment and materials are identified herein by a manufacturer's name, model, or catalog number followed by the words "or equal" or "or approved equal," Contractor must obtain Engineer's approval as required by the General Conditions.

B. Note that use of an "or equal" item shall not increase the cost to the Owner or increase contract times.

C. If using a "substitute," note that Contractor shall be responsible for any costs resulting from a change in Contract Documents, design change, Engineer's review and evaluation in accordance with the General Conditions**.**

1.05 CONSTRUCTION PROGRESS SCHEDULES

A. Submit initial progress schedule in duplicate within 15 days after date of Owner's Notice of Award for the Engineer's review.

B. Submit revised schedules with each Application for Payment, identifying changes since previous version.

C. Submit a Critical Path Method (CPM) chart with separate line for each major section of work or operation, identifying first work day of each week.

D. Show complete sequence of construction by activity, identifying work of separate stages and other logically grouped activities. Indicate the early and late start, early and late finish, float dates, critical path, and duration.

E. Indicate estimated percentage of completion for each item of work at each submission.

F. Indicate submittal dates required for shop drawings, product data, samples, and product delivery dates.

1.06 PROPOSED PRODUCTS LIST

A. Within 14 calendar days after date of Owners Notice of Award, submit complete list of major products proposed for use, with name of manufacturer, trade name, and model number of each product.

B. For products specified only by reference standards, give manufacturer, trade name, model or catalog designation, and reference standards.

C. Should the Contractor elect to substitute a proposed equivalent material to an “or equal” or "or approved equal" specification, the Contractor shall submit to the Engineer adequate documentation allowing the Engineer to determine the equivalency of the material. Contractor shall pay Engineer for costs incurred by Engineer in reviewing the proposed substitution for any substitutions that do not meet the specifications.

1.07 SHOP DRAWINGS

These requirements supplement and are in addition to requirements in Article 8.51, Volume 1.

A. General:

1. The Contractor shall submit shop drawings, equipment and materials data as required in the Technical Provisions of these specifications concerning the specific item as soon as practical. The Contractor may proceed, only at his own risk, with manufacture or installation of any equipment or work covered by said drawings, etc. until they are approved, and no claim, by the Contractor, for extension of the contract time will be granted by reason of his failure in this respect.

2. Shop drawings, as defined herein, consist of all drawings, diagrams, illustrations, schedules, and other data which are specifically prepared by or for Contractor to illustrate some portion of the work; and all illustrations, brochures, standard schedules, performance charts, instructions, diagrams, and other information prepared by a

manufacturer and submitted by Contractor to illustrate material or equipment for distinct portions of the work.

3. Submittal of incomplete or unchecked shop drawings will not be acceptable. Shop drawing submittals which do not clearly show Contractor's review stamp or specific written indication of Contractor review will be returned to Contractor for resubmission.

4. Submittal of shop drawings not required under these Contract Documents and not shown on the Submittal Register will be returned to the Contractor unreviewed and unstamped by the Engineer.

B. Stamp of Approval: All drawings, equipment, materials, and other submitted data shall be carefully reviewed by an authorized representative of the Contractor prior to submission to the Engineer. Each submittal shall be dated, signed, and certified by the Contractor, as being correct and in strict conformance with the Contract Documents. No consideration for review by the Engineer of any Contractor submittals will be made for any items which have not been so certified by the Contractor. All non-certified submittals will be returned to the Contractor without action taken by the Engineer, and any delays caused thereby shall be the total responsibility of the Contractor.

C. Shop Drawing Contents:

1. Shop drawings referred to herein shall include shop drawings and other submittals for both shop and field-fabricated items. The Contractor shall submit, as applicable, the following for all prefabricated or manufactured structural, mechanical, electrical, plumbing, process systems, and equipment:

   a. Shop drawings or equipment drawings, including dimensions, size and location of connections to other work, and weight of equipment.
   b. Catalog information and cuts.
   c. Installation and/or placing drawings for equipment, drives, and bases.
   d. Supporting calculations for equipment and associated supports specified to be designed by equipment manufacturers or suppliers.
   e. Wiring and control diagrams of systems and equipment.
   f. Complete manufacturer's specifications, including materials description and paint systems.
   g. Complete motor rating for all motors 5 horsepower and larger, including motor no-load, starting, and full-load current at rated voltage; full-load speed and current at 110 percent voltage; motor efficiency and power factor at 1/2, 3/4, and full-load at rated voltage.

h. List of special motor features being provided (i.e. space heater, altitude corrections, thermal protectors, etc.).
i. Performance data and pump or mixer performance curves.
j. Suggested spare parts list with current price information.
k. List of special tools required for checking, testing, parts replacement, and maintenance (special tools are those which have been specially designed or adapted for use on parts of the equipment, and which are not customarily and routinely carried by maintenance mechanics).
l. List of special tools furnished with the equipment.
m. List of materials and supplies required for the equipment prior to, and during startup.
n. List of materials and supplies furnished with the equipment.
o. Samples of finish colors for selection.
p. Special handling instructions.
q. Requirements for storage and protection prior to installation.
r. Requirements for routine maintenance prior to startup.
s. List of all requested exceptions to the Contract Documents.

D. Where the Drawings or individual specifications require that the shop drawings or specific design calculations be certified by an Engineer, the shop drawings or design calculations shall be stamped, signed, and dated by a Professional Engineer registered in the State of Arizona, or the state where the specific item is to be manufactured. Submittals missing the stamp, signature and/or date will be rejected and must be re-submitted.

E. Interfacing Work: Where called for in the Specifications, and as determined necessary by Engineer to provide proper correlation with other work, complete interface information shall be submitted. This interface information shall be accurate and contain all information necessary to allow for manufacturing and construction of the interfacing or connecting work.

1.08 PRODUCT DATA

A. Where required in the Specifications and as determined necessary by Engineer, submit product data for review for assessing conformance with the information given and design concept expressed in the Project Manual.

B. Product data may be catalog cuts, sheets, or other similar information provided from the manufacturer. Mark each copy to identify the applicable products, models, options, reference standards, and other data. Supplement manufacturer's standard data to provide information specific to the project. Indicate product utility and electrical characteristics, utility and electrical connection locations and requirements, and other similar information for functional equipment and appliances.

C. For products specified only by reference standards, indicate the manufacturer, trade name, model or catalog designation, and applicable standard(s).

1.09 SAMPLES AND TEST SPECIMENS

A. Where required in the Specifications and as determined necessary by Engineer, submit test specimens or samples of materials, appliances, and fittings to be used or offered for use in connection with the work. Include information as to their sources, prepay cartage charges, and submit such quantities and sizes for proper examination and tests to establish the quality or equality thereof, as applicable.

B. Submit samples and test specimens in ample time to enable Engineer to make tests or examinations necessary, without delay to the work.

C. Submit additional samples as required by Engineer to ensure equality with the original approved sample and/or for determination of Specification compliance.

D. Approved sample items (fixtures, hardware, etc.) may be incorporated into the work upon approval and when no longer needed by Engineer for reference.

1.10 QUALITY CONTROL SUBMITTALS

A. Quality control submittals shall be made in accordance with Section 01 40 00, QUALITY CONTROL and the following requirements in this article.

B. Manufacturer Certificates: When specified in individual specification Sections, submit manufacturer’s certificate to the Engineer for review.

1. Indicate that the material or product conforms to or exceeds specified requirements. Submit supporting reference data, affidavits, and certifications as appropriate.

2. Certificates may be recent or previous test results on the material or product, but must be acceptable to Engineer.

3. Wherever an item is specified as per industry standard, provide manufacturer’s certification of compliance regardless of whether or not specifically called for.

C. Manufacturer’s Certification of Proper Installation: Where manufacturer's certification of proper installation is required in the Specifications, the manufacturer shall provide certification stating the following:

1. The product or system has been installed in accordance with the manufacturer's recommendations.

2. The product or system has been inspected by a manufacturer's authorized representative.

3. Applicable safety equipment has been properly installed.

4. Proper electrical and mechanical connections have been made.

5. The product or system has been serviced with the proper lubricants.

6. Proper adjustments have been made and the product or system is ready for functional testing, startup, and operation.

7. Compliance with all specified standards.

D. Functional Test Certification: Where a certification of functional testing is specified for certain facilities or equipment, Contractor (as applicable to the facilities or equipment furnished) shall state in writing that:

1. Necessary hydraulic structures, piping systems, valves, and similar facilities have been successfully tested.

2. Necessary equipment systems and subsystems have been checked for proper installation, started, and successfully tested to indicate they are operational.

3. Adjustments and calibrations have been made.

4. The systems and subsystems are capable of performing their intended functions.

5. The facilities are ready for performance testing, or for startup and intended operation, as applicable.

6. The manufacturer has reviewed and acknowledged this certification. Where several manufacturers have furnished equipment in a system, obtain each manufacturer's review and acknowledgment of its respective equipment as part of a functional test for the overall system.

E. Performance Test Reports: Prepare and submit performance test reports where specified for equipment and systems.

F. Certification of Compliance:

1. Where specified, furnish certification of compliance for products specified to a recognized standard or code prior to the use of such products in the work.

    a. Engineer may permit use of certain materials or assemblies prior to sampling and testing if accompanied by a certification of compliance.
    b. Certifications shall be signed by the manufacturer of the product; state that the components involved comply in all respects with the requirements of the Specifications.
    c. Furnish certification of compliance with each lot delivered to the jobsite and clearly identify the lot so certified.

2. Products used on the basis of a certification of compliance may be sampled and tested at any time. The fact that a product is used on the basis of a certification of compliance shall not relieve Contractor of responsibility for incorporating products in the work which conforms to requirements of the Contract Documents. Products not conforming to such requirements will be subject to rejection whether in-place or not.

3. Engineer reserves the right to refuse permission for use of products on the basis of a lack of a certification of compliance.

1.11 MANUFACTURER'S INSTRUCTIONS

A. Refer to Section 01 77 00, CONTRACT CLOSEOUT for detailed instructions regarding installation, operation, and maintenance manuals.

B. Submit manufacturer’s printed instructions for delivery, storage, assembly, installation, start-up, adjusting, and finishing prior to, or with, the shipment of all equipment and other major construction items (piping, valves, gates, tanks, mechanical and electrical panels, etc.).

C. Identify conflicts between manufacturer’s instructions and Contract Documents.

D. Indicate special procedures, perimeter conditions requiring special attention, and special environmental criteria required for application or installation.

PART 2 PRODUCTS (NOT USED)

PART 3 EXECUTION (NOT USED)

END OF SECTION 01 33 00

(This page intentionally left blank)

PART 1 GENERAL

1.01 SECTION INCLUDES

A. Quality assurance and control of installation.

B. Tolerances.

C. References.

D. Testing and Special Inspections.

E. Product standardization and installation.

F. Cleaning during construction.

1.02 RELATED SECTIONS

A. SECTION 01 33 00, Submittals. See information regarding Manufacturer's Instructions and Certificates.

B. Individual specifications.

1.03 GENERAL

A. Provide all testing and Special Inspections in accordance with the General Conditions and other technical specifications in the Contract Documents.

1.04 QUALITY ASSURANCE/CONTROL OF INSTALLATION

A. Monitor quality control over suppliers, manufacturers, products, services, site conditions, and workmanship, to produce work of specified quality.

B. Comply fully with manufacturers' instructions, including each step in installation or construction sequence.

C. Should the manufacturers' instructions conflict with the Contract Documents, request a clarification from the Engineer before proceeding.

D. Comply with all specified standards as a minimum quality for the work except when more stringent tolerances, codes, or specified requirements indicate higher standards or more precise workmanship.

E. Perform work by person qualified to produce workmanship of specified quality.

F. Supervise performance of all work in such manner and by such means to ensure that the work, whether completed or in progress, will not be

subjected to harmful, dangerous, damaging, or otherwise deleterious exposure during construction period.

G. Products, materials, and equipment may be subject to inspection by Engineer and Owner at place of manufacture or fabrication. Such inspection shall not relieve Contractor of complying with the requirements of the Contract Documents.

H. Secure products in place as recommended by manufacturer with proper anchorage devices designed and sized to withstand pressures, vibration, physical distortion or disfigurement.

1.05 TOLERANCES

A. Monitor fabrication and installation tolerance control of products to produce acceptable work. Do not permit tolerances to accumulate.

B. Comply with manufacturers' recommended tolerances and tolerance requirements in reference standards. When such tolerances conflict with the Contract Documents, request clarification from Engineer before proceeding.

C. Adjust products to appropriate dimensions; position before securing products in place.

1.06 REFERENCES

A. Conform to reference standards by the date of current issue as of the date for receiving Bids except where a specific date is established by code or as specially noted in these Specifications or the Drawings.

B. Obtain copies of standards and maintain on site when required by the Contract Documents.

C. For products or workmanship specified by association, trade, or other consensus standards, comply with the requirements of the standards except when more stringent requirements are specified in the Contract Documents or are required by code.

D. Should the re requirements of specified reference standards conflict with the Contract Documents, request clarification from the Engineer before proceeding.

E. The contractual relationship, duties, or responsibilities of the parties to the Contract, nor those of the Engineer, shall not be altered from the Contract Documents by mention or inference in any reference documents.

1.07 TESTING AND SPECIAL INSPECTIONS

A. General:

1. Testing and inspections shall be provided as required by the Drawings and Specifications and in accordance with the General Conditions. The following summarizes testing and inspection responsibilities and requirements, but the General Conditions, individual materials and equipment specifications, and the Drawings must be consulted for complete and detailed testing and inspection requirements.

B. Owner Provided Quality Assurance Testing and Special Inspections:

1. The Owner will retain a qualified inspector or testing agency to perform the specified Special Inspections or quality assurance testing. If not explicitly stated in the Drawings or Specifications that the Owner is providing quality assurance testing, it shall be the Contractor's responsibility to provide this testing.

2. The Contractor shall be responsible for coordinating with the Engineer and Owner and scheduling the testing and Special Inspections to ensure that inspections are completed as required by the Drawings and Specifications and in accordance with the General Conditions.

3. Assure that Owner and Engineer and their quality assurance agency have access to all work areas at all times work is in progress.

C. Contractor Provided Testing:

1. With the exception of the explicitly specified Owner provided Special Inspections and quality assurance testing, the Contractor shall be responsible for and pay for all testing required to control contractor production and construction processes and as required by the Drawings and Specifications. The Contractor shall notify the Engineer when the Work is ready for quality control testing to allow Engineer's representative to witness the testing.

2. All Contractor testing, except leakage testing, pressure testing, and most equipment startup testing, shall be performed by an independent, certified testing laboratory paid for by the Contractor and approved by the Owner and Engineer. All test results shall be provided to the Engineer and the Contractor shall provide written authorization to the testing laboratory to release test results to the Engineer. A copy of this authorization shall be submitted to the

Engineer prior to construction startup. The Engineer shall have the authority to select when and where tests are taken (i.e. select concrete truck(s), areas of backfill for density, etc.). However, this does not relieve the Contractor from the requirement of giving reasonable notice that Work is ready for inspection.

3. The Contractor shall be responsible for all labor and materials associated with the filling, flushing, and hydrostatic and leakage testing of all pipelines**,** structures, tanks, and other appurtenances. Hydrostatic and leakage testing shall be conducted in the presence of the Engineer/Owner.

D. The Engineer reserves the right to conduct additional testing to assure compliance with the specifications.

E. Tests made by the Owner or the Engineer will not relieve the Contractor from his obligation to perform the work in accordance with the Technical Specifications.

F. All laboratory and material test results shall be submitted to the Owner and Engineer for review and approval prior to incorporation into the work, or covering of the tested material or work.

G. Testing and Work results not meeting requirements or found to be defective shall be re-tested, repaired, or replaced at the Contractor's expense.

H. The Contractor shall be responsible for material mix designs and testing including, but not necessarily limited to:

1. Gradation, liquid limit, plasticity index and moisture/ density tests for native soil backfill, imported soil backfill, imported bedding, and aggregate base and sub-base courses.

2. In-place density tests of compacted soil backfill.

3. Gradation and fracture tests for base and surfacing aggregates.

4. Portland Cement concrete and asphaltic concrete pavement mix designs.

5. Concrete strength cylinder tests.

6. Marshall field stability tests and core sample density tests of asphalt concrete.

7. Masonry material tests.

8. Test failure as provided hereinbefore.

9. Pressure tests of water and other pipelines including cleaning and flushing.

10. Equipment performance and/or functional tests.

11. Concrete water holding structure leakage tests.

12. Disinfection bacteriological tests.

1.08 PRODUCT STANDARDIZATION AND INSTALLATION

A. Like items of products furnished and installed throughout the project shall be end products of one manufacturer to achieve standardization for appearance, operation and maintenance, spare parts and replacement, and manufacturers' services.

B. Obtain manufacturers' services for installation and testing of products as specified in each product or equipment specification, and in accordance with Section 01 66 40, MANUFACTURER'S SERVICES.

C. Installation of materials and equipment shall be as specified in the Contract Documents and as follows:

1. In conformance with the manufacturer's written instructions.

2. On concrete bases of proper size determined by equipment dimensions and at least 3 inches wider and longer than equipment baseplate, unless specified otherwise.

3. With anchor bolts accurately placed using templates.

PART 2 PRODUCTS (NOT USED)

PART 3 EXECUTION

3.01 MINIMUM CONTRACTOR PROVIDED TESTING REQUIREMENTS

A. Minimum quality control testing provided by the Contractor shall include but not be limited to:

1. Subgrade and Crushed Base Course Materials and Compaction Testing: Unless specified otherwise, provide at least one field density test for each 1000 square feet of subgrade prior to placing any fill and provide at least one field density test for each 1000

square feet of every compacted backfill layer prior to placing another level of fill.

2. One moisture density curve for each type of backfill material used, with sieve analysis and plasticity index.

3. Process Equipment Factory and Functional Testing: As specified in specific Division 46 00 00 equipment Sections.

4. Supervisory Control And Data Acquisition (SCADA) System Component and System Testing.

5. Pipeline Leakage/Pressure Testing: Provide for all new pipes as specified in Section 40 05 10, PIPING – GENERAL.

3.02 CLEANING DURING CONSTRUCTION

A. During execution of work, clean site and public properties and dispose of waste materials, debris, and rubbish to assure that buildings, grounds, roads, and public properties are maintained free from accumulations of waste materials.

B. Wet down dry materials and rubbish to prevent blowing dust.

C. Provide approved containers for collection and disposal of waste material, debris, and rubbish.

D. Remove grease, dust, dirt, stains, labels, fingerprints, and other foreign materials from exposed and partially exposed surfaces.

E. Repair, patch, and touch up marred surfaces to specified finish and to match adjacent surfaces.

F. Vacuum clean interior building areas when ready to receive finish painting, and continue vacuum cleaning as needed until building is ready for substantial completion or occupancy.

G. Vacuum clean all interior spaces, including inside cabinets. Broom clean paved surfaces and rake clean other surfaces of grounds.

H. Handle materials in a controlled manner with as few handlings as possible; do not drop or throw materials from heights.

I. Schedule cleaning operations so that dust and other contaminants resulting from cleaning process will not fall on wet, newly painted surfaces.

J. Use only cleaning materials recommended by manufacturer of surfaces to be cleaned. Use cleaning materials only on surfaces recommended by cleaning material manufacturer.

END OF SECTION 01 40 00

(This page intentionally left blank)

PART 1 GENERAL

1.01 SECTION INCLUDES

A. Temporary utilities required during construction.

B. Temporary construction facilities, including access roads, field offices, and storage facilities.

C. Requirements for security and protection of facilities and property.

D. Requirements for traffic regulation and access to the work.

1.02 RELATED WORK SPECIFIED UNDER OTHER SECTIONS

A. See the Volume 1 for jobsite safety requirements.

B. See Section 01 11 00, SUMMARY OF WORK and Section 01 14 16, COORDINATION AND SITE CONDITIONS for site protection requirements.

C. See Volume 1 for temporary controls for protection of the environment during construction.

D. See Section 01 40 00, QUALITY CONTROL for cleaning during construction.

E. See Section 02 01 90, MOVE IN AND SITE PREPARATION for additional information pertaining to the coordination and work necessary to move in personnel and equipment; set up all temporary offices, buildings, facilities, storage areas, and utilities; and prepare the site for construction.

1.03 MOBILIZATION AND STAGING

A. Use area designated for Contractor's temporary facilities as shown as the staging area on Drawings. Arrange and pay for additional area if needed for construction operations, as acceptable to Owner, Engineer, and adjacent property owners.

B. Notify Owner of obstructions not shown or not readily apparent by visual inspection of the staging area. If such obstructions adversely affect Contractor's operations, proper adjustment to Contract will be considered. Do not remove obstructions without Owner's prior consent.

1.04 TEMPORARY UTILITIES

A. Costs After Substantial Completion: Contractor shall pay for all temporary utility costs during construction. Upon acceptance of the work or a portion of the work defined and certified as substantially complete by Engineer, and Owner commences full-time successful operation of the facility or portion thereof, the Owner will bear the cost for utilities used for Owner's operation.

B. Electric Power:

1. Electric power is available at or near the project site. Determine the type and amount available and make arrangements for obtaining temporary electric power service, metering equipment, and pay all costs for the electric power used during the Contract period, except as specifically provided for utilities used by the Owner on portions of the work designated in writing by the Engineer as substantially complete.

2. Temporary electric power installations shall meet construction safety requirements of OSHA, state, and other governing agencies.

3. Cost of electric power used in performance and acceptance testing shall be borne by Contractor.

C. Water for Contractor’s Use:

1. The Contractor shall provide an adequate supply of water of a quality suitable for all domestic and construction purposes.

2. All drinking water on the site during construction shall be furnished by the Contractor and shall be bottled water or water furnished in approved metal or plastic dispensers. Notices shall be posted conspicuously throughout the site warning the Contractor’s, Owner’s, Engineer’s, and other personnel that piped water may be contaminated or non-potable.

3. The Contractor shall not make connection to or draw water from any fire hydrant or pipeline without first obtaining permission of the authority having jurisdiction over the use of said fire hydrant or pipeline and from the agency owning the affected water system. For each such connection made, the Contractor shall first attach to the fire hydrant or pipeline a valve and a meter, if required by the said authority, of a size and type acceptable to said authority and agency.

4. The site shall be graded to drain. Excavations shall be maintained free of water. Provide, maintain, and operate groundwater pumping

equipment as needed. Contractor shall make provisions for disposal of groundwater compatible with adjacent property owners and federal, state and local agencies.

5. Before final acceptance of the work on the project, all temporary connections and piping installed by the Contractor shall be entirely removed and all affected improvements shall be restored to their original condition, or better, to the satisfaction of the Engineer and to the agency owning the affected utility.

6. Fire Protection: Construction facilities and all parts of the work shall be adequately protected against damage by fire. Contractor shall not block access to fire hydrants and shall coordinate with the local fire department during road closures. Hose connections and hose, water casks, chemical equipment, or other sufficient means shall be provided for fighting fires in the temporary structures and other portions of the work, and a responsible person shall be designated and instructed in the operation of such fire apparatus so as to prevent or minimize the hazard of fire. The Contractor's fire protection program shall conform to the requirements of Subpart F of the OSHA Standards for Construction.

7. Plant Water: The Contractor will be allowed to connect to the existing non-potable plant water system during the construction period, but coordination of flow and duration will need to occur with the Utility Manager due to the limited capacity of the existing system. Plant water for leak tests and other similar uses may be used by the Contractor. The Contractor shall obtain permission from the Owner before using any plant water from the treatment plant and shall be solely responsible for the adequate functioning of his pumping system and any discharge or waste of water therefrom.

D. Sewage:

1. Provide and maintain sanitary facilities for Contractor's employees and subcontractors' employees that comply with regulations of local and state health departments. Provide chemical toilets of suitable types and maintain them in a sanitary condition at all times, conforming to code requirements and acceptable to the health authorities. They shall be watertight construction so that no contamination of the area can result from their use. Make arrangements for frequent emptying of toilets. Upon completion of the work, remove toilets and restore area to original condition. Location of portable toilets shall be approved by Owner and adjacent property owners prior to placement.

2. Use of Owner's existing sanitary facilities by construction personnel will not be allowed.

E. Heat:

1. Definitions:

a. Heating required after enclosure of building is classified as "temporary heat". Building shall be considered as enclosed when it is roofed and is protected at doorways, windows, and other openings to provide reasonable heat retention.
b. Heating required before buildings are enclosed is classified as "cold weather protection."

2. Use warm air heat from electric, oil or gas indirect-fired portable unit heaters suitably vented to outside as required for protection of health and property. Open salamander type heaters will not be permitted.

3. Parts of buildings or products that become damaged because of insufficient or excessive heat shall be repaired or replaced to original condition by the Contractor at no additional cost to the Owner.

4. Except as otherwise specified, maintain temperatures in all parts of new buildings above 50 degrees F and no higher than 75 degrees F during the heating season.

5. Upon acceptance or occupancy of building by Owner, Contractor's responsibility for temporary heating shall terminate for that building.

6. If permanent system is used for temporary ventilation, provide temporary throwaway filters.

7. If permanent natural gas piping is used for temporary heating units, do not modify or reroute gas piping without approval of gas utility company and Engineer. Provide separate gas metering as required by gas utility company.

PART 2 PRODUCTS (NOT USED)

PART 3 EXECUTION

3.01 TEMPORARY CONSTRUCTION

A. Access Roads and Parking:

1. Construct temporary construction access roads and detours as necessary to execute the work and as approved by the Owner and Engineer. Maintain in good condition until no longer needed, then remove the temporary roads, revegetate the disturbance or otherwise leave the disturbed area in a preconstruction condition satisfactory to the Owner and Engineer.

2. Use area designated as staging area on Drawings or other area as designated by the Owner for parking of Contractor's employees' vehicles.

B. Storage Yards and Buildings:

1. Construct temporary storage yards for the storage of products that are not subject to damage by weather conditions. Materials such as pipe, and reinforcing and structural steel shall be stored on pallets or racks, off the ground, and in a manner to allow ready access for inspection and inventory. Temporary gravel surfacing of storage yards must be approved by the Owner and Engineer.

2. Erect or provide temporary storage buildings of various sizes needed to protect mechanical and electrical equipment and other materials, as recommended by manufacturers of such equipment and materials:

   a. Provide environmental control systems that meet recommendations of manufacturers of equipment and materials stored in the building.
   b. Buildings shall be of sufficient size.
   c. Arrange or partition buildings to provide security for their contents and ready access for inspection and inventory.
   d. At or near completion of the work, temporary storage buildings shall be dismantled, removed from the site, and remain the property of the Contractor.

3. Store combustible materials (paints, solvents, fuels, etc.) in a well-ventilated building remote from other buildings and in accordance with OSHA CFR 1910, 1926, and NFPA 30 requirements.

C. Fencing and Barricades:

1. Security Fence: If considered necessary by Contractor, erect a temporary security fence with gates and locks around the construction storage site, located and as approved by Owner and Engineer.

2. Barricades: Provide barricades as necessary to prevent unauthorized entry to construction areas, both inside and outside of fenced areas. Also provide barricades to protect existing facilities and adjacent properties from potential damage. Locate barriers to enable access by facility operators and property owners.

3.02 SAFETY AND PROTECTION

A. General Safety Requirements:

1. Contractor shall be solely responsible for initiating, maintaining, and supervising all safety precautions and programs per Volume 1.

2. Contractor shall do whatever work is necessary for safety and be solely and completely responsible for conditions of the jobsite, including safety of all persons (including employees) and property during the Contract period. This requirement shall apply continuously and not be limited to normal working hours.

3. Safety provisions shall conform to Federal and State Departments of Labor Occupational Safety and Health Act (OSHA), and other applicable federal, state, county, and local laws, ordinances, codes, requirements set forth herein, and regulations that may be specified in other parts of these Contract Documents. Where these are in conflict, the more stringent requirement shall be followed. Contractor shall become thoroughly familiar with governing safety provisions and shall comply with the obligations set forth therein.

4. Contractor shall develop and maintain for the duration of the Contract, a safety program that will effectively incorporate and implement required safety provisions including those of the Owner’s safety program. Contractor shall appoint a qualified employee who is authorized to enforce compliance with the safety program.

5. Engineer's duty to conduct construction review of the Contractor's performance is not intended to include a review or approval of the adequacy of Contractor's safety supervisor, safety program, or safety measures.

6. Construct and maintain satisfactory and substantial temporary chain link fencing, solid fencing, railing, barricades or steel plates, as applicable, at all openings, obstructions, or other hazards in roads, streets, sidewalks, floors, roofs, and walkways. Such barriers shall have adequate warning lights as necessary or required for safety.

7. As part of safety program, Contractor shall maintain at its office or other well-known place at the jobsite, safety equipment applicable to the work as prescribed by the governing safety authorities, and articles necessary for giving first-aid to the injured. Establish procedures for the immediate removal to a hospital or a doctor's care of any person who may be injured on the jobsite.

8. If death or serious injuries or damages are caused, the accident shall be reported immediately by telephone or messenger to the Engineer and Owner. In addition, Contractor shall promptly report in writing all accidents whatsoever arising out of, or in connection with, the performance of the work whether on or adjacent to the site, giving full details and statements of witnesses.

9. If claim is made by anyone against Contractor or any subcontractor on account of accident, Contractor shall promptly report the facts in writing, giving full details of the claim.

10. All of the Contractor’s jobsite personnel must be trained in the hazards associated with Confined Space Entry. All personnel (including subcontractors) entering a confined space must be certified for Confined Space Entry.

B. Protection of Work and Property:

1. Refer to Section 01 11 00, SUMMARY OF WORK and/or Section 01 14 16, COORDINATION AND SITE CONDITIONS for additional requirements for protection of the site.

2. General:

a. Contractor shall employ such means and methods necessary to adequately protect public property and property of the Owner against damage. In the event of damage to such property, immediately restore the property to a condition equal to its original condition and to the satisfaction of the Engineer and the owner of said property, and bear all costs therefore.
b. Protect stored materials, cultivated trees and crops, and other items located adjacent to the proposed work. Notify property owners affected by the construction at least 48 hours in advance of beginning of construction in different areas.

3. Examination of Existing Facilities:

a. After the Contract is awarded, but before the commencement of work, at the Contractor's request, Contractor and Engineer

shall make a thorough examination of all existing buildings, structures, and other facilities in the vicinity of the work and for which permission for entry has been granted, as applicable, which might be damaged by construction operations.

b. Records in triplicate of all observations shall be prepared by the Contractor and each copy of every document shall be signed by the authorized representative of the Owner and of the Contractor.

c. Photographs, as requested by the Owner, shall be made by the Contractor and signed in the manner specified above. One signed copy of every document and photograph will be kept on file in the office of the Engineer.

d. These records and photographs are intended for use as indisputable evidence in ascertaining whether and to what extent damage occurred as a result of the Contractor's operations, and are for the protection of the adjacent property owners, the Contractor, and the Owner.

4. Finished Construction:

a. Contractor shall assume the responsibility for protection of finished construction and shall repair and restore any and all damage to finished work to its original or better condition.

b. Prevent wheeling of loads over finished floors, either with or without plank protection, except in rubber-tired wheelbarrows, buggies, or dollies. Protect finished floors and concrete floors exposed as well as those covered with composition tile or other applied surfacing.

c. At such time temporary facilities and utilities are no longer required for the work, notify Engineer of intent and schedule for their removal. Remove temporary facilities and utilities from the site as Contractor's property and leave the site in such condition as specified, as shown on the Drawings or as directed by the Owner.

d. In unfinished areas, leave the site evenly graded, seeded, or planted as necessary, in a condition that will restore original drainage, and with an appearance equal to or better than original.

C. Fire Prevention: Perform all work in a fire safe manner. Furnish and maintain on the site adequate firefighting equipment capable of extinguishing incipient fire. Comply with applicable federal, local, and state fire prevention regulations. Where these regulations do not apply, follow

applicable parts of the National Fire Prevention Standard of Safeguarding Building Construction Operations (NFPA No. 241).

D. Use of Explosives: No blasting or use of explosives will be allowed on the jobsite.

3.03 OSHA REGULATIONS

A. General: Contractor shall develop a safety plan and perform all work in a manner to comply with all current requirements of the Amendment to the Occupational Safety and Health Administration Construction Standards for Excavations, 29 CFR Part 1926, Subpart P printed Tuesday October 31, 1989 and effective January 2, 1990.

B. Any conflicting information between the OSHA document and these Contract Documents shall be revised so that the OSHA document requirements supersede and take precedence over all other conflicting information. Contractor shall be required to obtain copies of the OSHA document and to complete review of the same to avoid misinterpretation of their regulations.

C. Trench Shoring:

1. TYPE 1 TRENCH EXCAVATION: Excavation performed as Type 1 may not need to have protective support. The sides of all trenches shall be sloped back according to the soil type and in accordance with other criteria as defined in OSHA STANDARDS, 29 CFR, PART 1926, SUBPART P. Contractor shall solely be responsible for determination of soil type and full compliance.

2. TYPE 2 TRENCH EXCAVATION: Excavation performed as Type 2 shall provide a support system, shielded system or other system, if required, which adequately protects employees against cave-in and which is designed in accordance with OSHA STANDARDS as defined in 29 CFR, PART 1926, SUBPART P.

Note: OSHA regulations require that all trenches which are deeper than 20 feet are to have the side slopes and/or the protective systems designed by a registered professional engineer.

3.04 SECURITY REQUIREMENTS

A. Contractor’s Materials: Contractor shall be responsible for the security of all materials, equipment, tools, etc. used on the job. All materials which can

be easily removed shall be stored in a locked building provided by the Contractor.

END OF SECTION 01 50 00

PART 1 GENERAL

1.01 SECTION INCLUDES

A. Requirements and procedures for work necessary for shipment, handling, storage, and protection of material and equipment products.

1.02 RELATED WORK SPECIFIED UNDER OTHER SECTIONS

A. See Section 01 66 40, MANUFACTURERS' SERVICES for requirements for products purchased from manufacturers by the Contractor.

B. See appropriate detail equipment sections for installation of Owner-furnished products for Contractor’s responsibilities for such items.

1.03 GENERAL REQUIREMENTS PRIOR TO SHIPMENT

A. At minimum, provide products meeting specified requirements and reference standards.

B. Specified products define the standard of quality, type, function, dimension, appearance, and performance required. Furnish products of qualified manufacturers that are suitable for intended use. Furnish products of each type from single manufacturer unless specified otherwise.

C. Domestic Products: Except where specified otherwise, domestic products are required and interpreted to mean products mined, manufactured, fabricated, or produced in the United States or its territories.

D. Do not use materials and equipment removed from existing premises except as specifically permitted by the Contract Documents and/or as shown on the Drawings.

1.04 PREPARATION FOR SHIPMENT

A. When practical, products shall be factory assembled.

1. Furnish assembly instructions for parts and assemblies that are shipped unassembled.

2. Mark or tag the separate parts and assemblies for field assembly.

3. Cover machined and unpainted parts that may be damaged by the elements with a strippable protective coating.

B. Package or crate products to provide protection from damage during shipping, handling, and storage.

1. Mark or tag the outside of each package or crate to indicate its purchase order number, bill of lading number, contents by name, name of project and Contractor, equipment number, and approximate weight.

C. Mark special tools to identify the associated products by name, equipment, and part number. Package tools for protection against damage from the elements during shipping, handling, and storage. Ship in boxes or containers marked to indicate the contents and as stated above. Deliver special tools before the associated equipment is scheduled for the initial test run.

D. Contractor shall request a minimum 7-day advance notice of shipment from manufacturers.

E. Where specified for specific product, factory test results shall be reviewed and accepted before such product is shipped.

F. Transport and handle products according to manufacturer's instructions.

1.05 RECEIVING, INSPECTION, AND UNLOADING

A. Contractor shall record the receipt of products at the jobsite.

B. Upon receipt of products at the jobsite, Contractor shall inspect for completeness and evidence of damage during shipment.

1. Owner or Engineer and manufacturer's representative may be present for inspection.

2. Should there appear to be damage, notify the Engineer immediately and inform the manufacturers and the transportation company.

3. Expedite replacement of damaged, incomplete, or lost items.

C. After completion of inspection, unload products in accordance with manufacturer's instructions for unloading, or as specified. Do not unload damaged or incomplete products to be returned to manufacturer for replacement, except as necessary to expedite return shipment.

D. Provide proper equipment and number of personnel to handle products; use methods to prevent soiling, damage, or disfigurement.

1.06 HANDLING, STORAGE, AND MAINTENANCE

A. Handle products in accordance with the manufacturer's written recommendations, and in a manner to prevent damage.

B. Store and protect products prior to installation as recommended by the manufacturer.

1. Store products such as pipe and reinforcing steel off the ground in approved storage yards, leased, owned, or otherwise controlled by the Contractor.

2. Store items subject to damage by the elements, vandalism, or theft in secure buildings.

3. Provide environmentally controlled storage facilities for items requiring environmental control for protection.

4. Storage yards and storage buildings shall also conform to requirements of Section 01 50 00, CONSTRUCTION FACILITIES AND TEMPORARY CONTROLS.

C. Provide manufacturer's recommended maintenance during storage, installation, and until products are accepted for use by Owner.

D. Store products to provide access for inspection and inventory control. Contractor shall document products in storage to facilitate inspection and to estimate progress payments for products delivered, but not installed in the work.

E. Do not store products on private property without written permission of property owner or lessee.

F. Cover products subject to deterioration with impervious sheet covering. Provide ventilation to prevent condensation and degradation of products.

G. Store loose and/or granular materials on solid flat surfaces in well drained areas. Prevent mixing with foreign matter.

H. Provide bonded off-site storage and protection when Project site does not permit or cannot handle on-site storage or protection.

I. Also see Division 26 00 00, ELECTRICAL for handling, storage, and maintenance requirements for electrical equipment and motors.

J. Where specific security measures are needed to protect stored equipment and materials at the jobsite, Contractor shall provide lockable security fencing, lockable enclosed buildings or trailers, or other similar and appropriate measures. Contractor shall be solely responsible for proper security measures and the costs for such measures shall be incidental to the work.

PART 2 PRODUCTS (NOT USED)

PART 3 EXECUTION (NOT USED)

END OF SECTION 01 66 00

PART 1 GENERAL

1.01 SECTION INCLUDES

A. Contractor's requirements to provide services of the manufacturers' representatives, and special coordinating services required of the Contractor that apply during construction, facilities testing and startup, and training of the Owner's personnel for facilities operation.

B. Where manufacturers' services are specified, Contractor shall furnish a qualified representative of the manufacturer to provide these services. Where time is necessary in excess of that stated in the Specifications for manufacturers' services, additional time required to perform the specified services shall be considered incidental work. Where repeat visits are required at no fault of the Owner, they shall be provided at no additional cost to the Owner.

C. For those products purchased by the Owner, manufacturer's services shall be coordinated by the Owner with input and guidance from the Contractor regarding scheduling for those services.

1.02 DEFINITIONS

A. For purposes of furnishing manufacturer's services, the following definitions shall apply:

1. Manufacturer's Representative: Employee of manufacturer who is factory trained and knowledgeable in technical aspects of their products and systems.

2. Construction Period: The time period from the Contractor's purchase order date to the date of certification by the manufacturer that the material or equipment is properly installed and that functional and performance tests, as applicable to the equipment specified, have been successfully demonstrated.

3. Person-day or Man-day: One person for 8 hours straight time, exclusive of Saturdays, Sundays, or holidays.

1.03 FULFILLMENT OF SPECIFIED MINIMUM SERVICES

A. Only those manufacturers' services, including trips to the jobsite for installation assistance or training in the classroom, receiving prior written acceptance by the Owner and Engineer shall act to fulfill the specified services. Submit requests for prior acceptance:

1. In writing.

2. Ten calendar days prior to providing the services.

3. Stating the service to be provided.

4. Stating the reason(s) why the timing of the service is appropriate.

B. Requests made less than 10 calendar days prior to the providing of manufacturers' services may not receive written response prior to the times the services are requested to be provided.

C. If manufacturer's representative is found deficient in training or experience by the Owner or Engineer, furnish other acceptable representatives after acceptance of resumes and other documentation of proposed representatives.

D. Furnish manufacturers' representatives of products and systems as needed with appropriate levels of experience and expertise. Representatives shall resolve assembly or installation problems attributed to, or associated with, their products and systems, whether or not specifically required in the specifications, at no extra cost if the needed time on-site is more than the specified minimum time.

E. Installation Completion Schedule: Required for scheduling equipment installation assistance, testing, start-up, and the training of Owner's operating personnel by equipment manufacturers.

1. List estimated installation completion dates for the equipment and systems requiring services of manufacturers' representatives.

2. Submit the installation completion schedule for each equipment item or system not less than 21 calendar days prior to the time that associated equipment is installed and in a suitable condition for training the Owner's personnel.

3. Revise the schedule to facilitate training of appropriate personnel, as deemed necessary by Owner, and to ensure full participation by manufacturers' representatives.

F. The phased construction of the project may require phased manufacturer's services for startup of equipment.

1.04 FUNCTIONAL TESTING

A. Where functional (or run) testing at the job site is required in the Specifications, furnish manufacturer's representative to assist with the test. Refer to individual equipment or component specifications for specific testing requirements. Testing shall generally include checking for proper

alignment, speed, quiet operation, proper connection, and satisfactory performance.

B. Perform initial equipment and system adjustment and calibrations in the presence and with the assistance of the manufacturer's representative.

C. Obtain manufacturer's review and acceptance of Contractor's certification of functional testing, where such certification is specified.

D. The phased construction of the project will require phased testing for specified items and the facility constructed by their applicable manufacturer's representative during the construction and testing of the additional phases.

1.05 PERFORMANCE TESTING

A. Where performance testing is specified, furnish manufacturer's representative to assist or conduct the test as specified for the particular equipment, and to correct malfunction of equipment. Follow specified test procedures.

B. Manufacturer's services shall continue until equipment or systems have been successfully tested for performance, have been accepted by the Owner for startup, and the performance test has been reviewed and accepted by the manufacturer.

C. Unless otherwise specified, performance testing shall use plant fluid or material that the equipment or system is designed to handle during normal service conditions.

D. Prior to actual startup, performance testing shall use plant effluent water with suitable quality to simulate actual operating conditions for the following operations:

1. All pipeline leak tests.

2. All pumping equipment functional and performance tests as specified in the detail equipment specifications.

3. All other equipment functional and performance tests as specified in the detail equipment specifications.

1.06 STARTUP

A. Prior to start-up of the facilities, the manufacturer shall have prepared and pre-tested all equipment insofar as possible to check its ability for sustained operation, including inspections and adjustments by manufacturer's servicemen.

B. After the facilities are sufficiently complete to permit start-up, the Contractor shall furnish competent personnel to start up the facilities as required. The Contractor will be responsible for start-up of all facilities constructed under the construction contract. During the initial start-up period for equipment and controls, the manufacturer shall check and provide for satisfactory mechanical operation of the facilities. Insofar as possible, the manufacturer's representatives shall be present during this period to instruct the operators in the care, operation, and maintenance of the equipment. Process considerations will be given secondary consideration during this period, but any process information or assistance required will be furnished by the Engineer or the Owner.

C. Contractor shall conduct, with assistance of manufacturer's representative, startup and field test on equipment, systems, and subsystems, as specified in other sections.

1. Contractor shall designate and provide personnel to be responsible for coordinating and expediting the startup of equipment and systems. The person(s) shall be present during pre-startup meetings and shall be available to Owner's personnel and Engineer during the startup period.

2. Where startup services are required in the Specifications, furnish and coordinate the specified manufacturer's services for the startup period. When startup has commenced, schedule remaining work to not interfere with or delay completion of the project.

3. Startup staff shall include, but not be limited to, major equipment and system manufacturers' representatives, subcontractors, electricians, instrumentation personnel, millwrights, pipefitters, and plumbers in addition to Contractor's startup coordinator(s).

1.07 TRAINING OF OWNER'S PERSONNEL

A. Contractor's Personnel: Designate and provide Contractor's personnel to be responsible for coordinating and expediting training duties. The person(s) shall be present during training coordination meetings with the Owner and shall be familiar with the Operation and Maintenance (O&M) Manual information specified in Section 01 77 00, CONTRACT CLOSEOUT.

B. Manufacturer's Representative: Where training of Owner's personnel is required in the Specifications, furnish manufacturer's representative to provide detailed instructions to Owner's personnel for operation and maintenance of the specified equipment.

1. Training services include pre-startup classroom instruction, post-startup classroom instruction, and onsite equipment instruction, as stated in the Specifications.

2. Manufacturer's representative shall be intimately familiar with O&M requirements of the specified equipment.

C. Instruction Lesson Plan:

1. Manufacturer's proposed Lesson Plan shall include the elements presented in the Outline of Instruction Lesson Plan. Specific components and procedures shall be identified in the proposed Lesson Plan including the following topics:

a. Equipment Operation.
b. Detailed Component Descriptions.
c. Equipment Preventive Maintenance (PM).
d. Equipment Troubleshooting.
e. Equipment Corrective Maintenance.

1.08 TRAINING AIDS

A. The manufacturer's instructor shall incorporate training aids as appropriate to assist in the instruction. At a minimum, the training aids shall include text and figure handouts. Other appropriate training aids are:

1. Audio-visual aids such as films, slides, videotapes, overhead transparencies, posters, blueprints, diagrams, and catalogue sheets.

2. Equipment cutaways and samples such as parts, damaged equipment, etc.

3. Tools such as repair tools, customized tools, measuring and calibrating instruments.

B. The manufacturer's instructor shall use descriptive class handouts during the instruction. Photocopied class handouts shall be good quality reproductions. Class handouts should accompany the instruction with frequent reference made to them. Customized handouts developed especially for the instruction are encouraged. Handouts planned for the instruction shall be attached with the manufacturer's proposed Lesson Plan.

1.09 "HANDS ON" DEMONSTRATIONS

A. The manufacturer's instructor shall present at least two "hands-on" demonstrations of common corrective maintenance repairs so that all operation and maintenance personnel have the opportunity to witness the demonstration. The manufacturer shall provide the tools and equipment to

conduct the demonstrations. Requests for supplemental assistance and facilities should be submitted with the manufacturer's proposed Lesson Plan. The proposed "hands-on" demonstrations should be described in the manufacturer's proposed Lesson Plan.

B. In any "hands-on" training situation where Owner's operation or maintenance personnel participate in disassembly or assembly of equipment components, the manufacturer shall be responsible for such disassembly or assembly and shall provide written certification of proper equipment operation to the Engineer.

1.10 PERMISSION TO VIDEO TAPE TRAINING

A. The suppliers, manufacturers and contractors shall provide any necessary releases to permit the Owner to video tape any or all training sessions for exclusive use by the Owner for continuing training efforts.

1.11 OTHER SERVICES DURING CONSTRUCTION

A. Furnish Manufacturers' representatives of products and systems for other services, when required by the Contractor for assistance during installation or testing. Representatives shall resolve assembly or installation problems attributable to, or associated with, their products and systems, whether or not specifically required in the Specifications at no additional cost.

PART 2 PRODUCTS (NOT USED)

PART 3 EXECUTION (NOT USED)

END OF SECTION 01 66 40

PART 1 GENERAL

1.01 SECTION INCLUDES

A. Damage to Existing Structures

B. Closeout Procedures.

C. Final Cleaning.

D. Project Record Documents.

E. Operation and Maintenance Data.

F. Warranties, Bonds and Affidavits.

G. Final Inspection.

H. Spare Parts and Maintenance Materials.

1.02 DAMAGE TO EXISTING STRUCTURES

A. Prior to final acceptance by the Owner, the Contractor shall repair or otherwise return to original condition any parts of the existing facilities which have been damaged during construction.

1.03 CLOSEOUT PROCEDURES

A. These requirements supplement and are in addition to requirements, in Article 8.52, 8.68 and 9.7, of Volume 1.

B. The Contractor shall submit written certification that the Contract Documents have been reviewed, the work has been inspected, and that the work is complete in accordance with the Contract Documents and is ready for the Engineer's final inspection.

C. The Contractor shall provide any submittals to the Engineer and/or the Owner that are required by governing or other authorities.

D. The Contractor shall submit the final Application for Payment identifying the total adjusted Contract Sum, previous payments, and the sum remaining due.

1.04 FINAL CLEANING

A. The Contractor shall keep the premises free of the accumulation of surplus materials and rubbish resulting from his construction operations and the operations of his subcontractors. The Contractor shall remove all waste and surplus materials, rubbish, and construction facilities from the site.

B. The Contractor shall execute final cleaning prior to the final inspection according to the following provisions:

1. Clean, sweep, wash, and polish work and equipment provided under the Contract, including finishes. Leave the site in a complete and finished condition to the satisfaction of the Engineer and Owner.

2. Remove debris including dirt, sand, and gravel from pipelines, channels, and any water holding structures.

3. Should Contractor not remove rubbish or debris or not clean the facilities and site as specified above, the Owner reserves the right to have final cleaning done at the sole expense of the Contractor.

C. The Contractor shall also provide for the following:

1. Employ experienced workers or professional cleaners for final cleaning.

2. Conduct final inspection of exposed interior and exterior surfaces and of concealed spaces in preparation for substantial completion or occupancy.

3. Remove grease, dust, dirt, stains, labels, fingerprints, and other foreign materials from exposed interior and exterior finished surfaces.

4. Repair, patch, and touch up marred surfaces to specified finish, and match adjacent surfaces.

5. Broom clean paved surfaces; rake clean other surfaces.

6. Remove from the Owner's property temporary structures and materials, equipment, and appurtenances not required as part of, or appurtenant to, the completed work.

7. Leave water courses, gutters, and ditches open and in condition satisfactory to Engineer and Owner.

8. Remove all construction survey stakes and other construction markers from the site.

D. Owner will assume responsibility for cleaning as of the date of Substantial Completion. Substantial completion date for the Contract shall be established as stated in the General Conditions.

1.05 PROJECT RECORD DOCUMENTS

A. The Contractor shall maintain on site, one set of the following record documents to record actual revisions to the work, to be submitted in their entirety at the completion of construction.

1. Contract Drawings, Specifications, and Addenda.

2. Change Orders and other Contract Modifications.

3. Reviewed shop drawings, product data, and samples.

B. The Contractor shall store Record Documents separate from the documents used for construction.

C. The Contractor shall record information concurrent with the construction progress, not less than once every week.

D. The Contractor shall legibly mark and record in the Construction Documents at each product section, the description of actual products installed, including the following:

1. Manufacturer's name and product model and number.

2. Product substitutions or alternates utilized.

3. Changes made by Addenda and Modifications.

E. The Contractor shall legibly record all Documents and Shop Drawings to record actual construction characteristics including:

1. Measured horizontal and vertical locations of any underground utilities and appurtenances, referenced to permanent surface improvements.

2. Measured depths of foundations in relation to project datum.

3. Field changes of dimension and detail.

4. Details not on the original Contract Drawings.

5. Measured locations of internal utilities and appurtenances concealed in construction, referenced to visible and accessible features of the work.

F. Additional Record Drawing Requirements:

1. Record drawings refer to those documents maintained and annotated by the Contractor during construction and are defined as (1) a neatly and legibly marked set of contract drawings knowing the final location of piping, equipment, and electrical conduits, outlet boxes and cables; (2) additional documents such as diagrams included in the Specifications; and (3) Contractor layout and installation drawings.

2. Unless otherwise specified, record drawings shall be full size and maintained in a clean, dry, and legible condition. Record documents shall not be used for construction purposes and shall be available for review by the Engineer during normal working hours at the Contractor's field office. Record drawings shall be reviewed for completeness by the Engineer each month as part of the progress payment review process. Record drawings shall be up to date prior to the Engineer approving monthly payment requests. At the completion of the work, prior to final payment, complete record drawings shall be submitted to the Engineer.

3. Marking of the drawings shall be kept current and shall be done at the time the material and equipment are installed. Annotations to the record documents shall be made with an erasable colored pencil conforming to the following color code:

Additions:	Red
Deletions:	Green
Comments:	Blue
Dimensions:	Graphite*

*Legibly mark to record actual depths, horizontal and vertical location of underground raceways, cables, and appurtenances referenced to permanent surface improvements.

G. The Contractor shall submit the required documents to Engineer with claim for Final Application for Payment.

1.06 OPERATION AND MAINTENANCE (O&M) DATA

A. The Contractor shall prepare binder covers with the printed title "OPERATION AND MAINTENANCE DATA", the title of project, and all subject matter contained in the binder when multiple binders are required. Engineer will determine adequacy of each O&M Manual as to content, organization, quality, and adequacy. Furnish acceptable manuals as reviewed by the Engineer.

B. Procedures:

1. Unless specified otherwise, furnish one hard copy and one electronic copy of complete instruction manuals for installation, operation, maintenance, and lubrication requirements for each unit or common units of mechanical and electrical equipment or system. Contractor shall assemble the O & M Manuals into complete sets for the entire project.

2. Furnish manufacturer's data and installation instructions prior to installation of the respective equipment. Furnish initial manual a minimum of 30 days prior to field test or equipment startup of the respective equipment. In all cases, the manuals shall be furnished at least 30 calendar days prior to the scheduled completion of the work. In no case shall submission of the manuals be delayed beyond 75 percent completion of the work. Submission of the manuals shall precede any payment to the Contractor for work completed in excess of the 75 percent completion level. Correct deficiencies found in the submitted manuals within 30 calendar days following notification of the deficiencies.

3. Manuals shall be customized to describe the equipment actually furnished, and shall not include extraneous data for models, options, or sizes not furnished.

   a. Where more than one model, option, or size of an equipment type is furnished, clearly indicate the information pertaining to each model, option, or size furnished.
   b. Manufacturer's preprinted literature may be accepted provided it has been customized to clearly indicate the models, options, and sizes actually furnished, and that equipment models not furnished have been clearly crossed out or deleted.

4. Assemble each hard copy of the manual in one or more three-ring, hardback type binders.

   a. Clearly label each binder to designate the system or equipment for which it is intended with reference to the building and equipment number, and the Specification section where the equipment is specified.
   b. Provide each binder with title page, typed table of contents with page numbers, and heavy section dividers with numbered plastic index tabs.
   c. Divide each manual into sections paralleling the equipment Specifications.

d. Where more than one binder is required, they shall be labeled “Vol. 1", “Vol. 2", and so on. Place the table of contents for the entire set, identified by volume number, in each binder.
e. Submit manual organization and format to Engineer for approval prior to manual preparation.
f. Punch all data for binding and composition; arrange printing so that punching holes do not obliterate data.

5. Material in manuals shall be suitable for photographic reproduction. Where copies of identical material are included, clarity and quality of copies shall equal the original.

6. Assemble each electronic copy of the manual on one or more compact discs (CD), digital video discs (DVD), USB drives, or another file storage device approved by the Owner’s Representative.

a. When electronic O&M manuals are provided, hard copies must also be provided.
b. Electronic files are to be provided in the latest version of Adobe Acrobat and the files are to be created directly to PDF if at all possible.
c. Organization of the electronic manual must correspond to the hard copy organization, and contain internal bookmarks linked from an index page to major sections of the manual.
d. The electronic files must be searchable. Scanned documents must be processed by optical character recognition so that all text is recognized and searchable.

C. Contents: Each manual shall be complete in all respects for equipment, controls, accessories, and associated appurtenances, and shall include the following:

1. Diagrams and illustrations.

2. Detailed description of the function of each principal component of the system.

3. Performance and nameplate data.

4. Installation instructions.

5. Procedure for starting.

6. Proper adjustment.

7. Test procedures and results of factory tests where required.

8. Procedure for operating.

9. Shutdown instructions for both short and extended durations.

10. Emergency operating instructions and trouble-shooting guide.

11. Safety precautions.

12. Maintenance and overhaul instructions illustrated with detailed assembly drawings showing each part with part numbers and sequentially numbered parts list. Include instructions for ordering spare parts, and complete preventive maintenance and overhaul instructions required to ensure satisfactory performance and longevity of the equipment.

13. Lubrication instructions and diagrams showing points to be greased or oiled; recommend type, grade, and temperature range of lubricants and frequency of lubrication; see paragraph Equipment Maintenance Summary Sheets.

14. List of electrical relay settings and control and alarm contact settings.

15. Electrical interconnection wiring diagram for equipment furnished, including all control and lighting systems.

16. Results of field functional and performance tests as required under Article CONTRACT CLOSEOUT SUBMITTALS.

17. Results of any factory tests.

18. See Divisions 43 00 00 and 46 00 00, with individual equipment specifications, and Division 26 00 00, ELECTRICAL**,** for additional specific O & M Manual requirements.

D. Equipment Maintenance Summary Sheets:

1. In addition to the O & M Manuals, provide completed Equipment Maintenance Summary Sheets as provided at the end of this specification; submit at the same time as prescribed above for the O & M Manuals.

2. Compile individual Equipment Maintenance Summary Sheets for each equipment item. Submit a complete set of Equipment Maintenance Summary Sheets with each hard copy O&M Manual; provide electronic copies of the Equipment Maintenance Summary Sheets with each electronic O&M Manual.

3. Provide a “Recommended Preventive Maintenance Schedule” as part of the Equipment Maintenance Summary Sheet. This schedule for preventative maintenance items is defined to mean any routine operation required to ensure the satisfactory performance and longevity of the equipment. Examples of typical preventative maintenance operations are lubrication, belt tensioning, adjustment of pump packing glands, and routine adjustments.

E. The Contractor shall provide documents and certificates, including the following.

1. Shop drawings and product data.

2. Manufacturer Certificates as specified in individual equipment specifications.

3. Photocopies of warranties and bonds.

F. The Contractor shall submit one PDF electronic copy of the completed volumes in final form with his request for final inspections. This copy will be returned after final inspection, with the Engineer comments. The Contractor shall revise the content of the documents as required and, within ten days, submit the required number of final sets bound in 8 ½ x 11-inch pages in binders with durable plastic covers and the required number of final sets of electronic copies.

1.07 WARRANTIES, BONDS AND AFFIDAVITS

A. The Contractor shall submit all written warranties, bonds, and affidavits, along with notarized copies, as required to the Owner prior to final payment.

B. Warranties shall extend for the full period of the required guarantee period after:

1. Replacement of work found defective during guarantee period.

2. Repair of inoperative items or adjustments to proper working condition of items not operating properly at time of final inspection.

C. The Contractor shall execute and assemble documents from all subcontractors, suppliers, and manufacturers.

D. The Contractor shall submit one set prior to the application for final payment, bound in 8 ½ x 11-inch pages, in binders with durable plastic covers and one set of electronic copies. The binder shall be provided with a printed title "WARRANTIES, BONDS AND AFFIDAVITS" and the project title.

E. For Items of Work delayed beyond the date of Substantial Completion, the Contractor shall provide an updated submittal within ten days after acceptance, listing the date of acceptance as the start of warranty period.

1.08 FINAL INSPECTION

A. After final cleaning, the Contractor shall request a final inspection in writing prior to the anticipated date of completion.

B. Work will not be considered ready for final inspection until it has been completed and the Contractor has certified that all items are properly operating and tested in strict compliance with the Contract Documents.

C. The Contractor or his project supervisor shall be at the job-site during the final inspection.

D. The Engineer will present to the Contractor, after the final inspection, a list of any items not meeting contract requirements. This list will be confirmed in writing by the Engineer and all items on it must be made acceptable before final payment will be made. Contractor shall immediately undertake work required to remedy defects and complete the work to the satisfaction of the Engineer and Owner.

PART 2 PRODUCTS

2.01 ACCESSORIES

A. Furnish to Owner, upon acceptance of equipment, all accessories required to place each item of equipment in full operation including, but not limited to, special tools, adequate oil and grease as required for first lubrication of equipment (after field testing), valve keys, handwheels, and other items as required for initial operation.

B. Extra Materials:

1. Furnish, tag, and box for shipment and storage the special tools and other extra materials specified in the individual Specification sections.

2. Deliver all extra materials prior to 90 percent project completion to the project site.

3. Notify Engineer upon arrival of extra materials.

2.02 SPARE PARTS AND MAINTENANCE MATERIALS

A. Provide products, spare parts, and maintenance materials in quantities specified in individual specifications sections, in addition to that used for construction of Work. Coordinate with Owner, deliver to Owner and obtain receipt prior to final payment.

B. Parts and materials shall be furnished in manufacturer's unopened cartons, boxes, crates or other protective covering suitable for preventing corrosion or deterioration for the maximum length of storage which may be normally anticipated. They shall be clearly marked and identified for each individual piece of equipment on which the part will be used.

C. Parts and materials shall be delivered to the Owner upon completion of the work or when the Owner assumes delivery of equipment. Contractor shall then place them in permanent storage rooms or areas approved by the Owner.

D. Provide a letter of transmittal including the following:

1. Date of letter and transfer of parts and materials.

2. Contract title and number.

3. Contractor's name and address.

4. A complete inventory of the parts and material, listing the applicable specification section for each.

5. A place for the Owner to sign and signify receipt of the parts and materials.

E. Contractor shall be fully responsible for loss or damage to parts and materials until they are transmitted to the Owner.

PART 3 EXECUTION (NOT USED)

END OF SECTION 01 77 00

PART 1 GENERAL

1.01 WORK INCLUDED

A. This section provides additional information pertaining to the coordination and work necessary to move in personnel and equipment, set up all temporary offices, buildings, facilities, utilities, and prepare the site for construction.

1.02 GENERAL

A. The limits of the site are shown on the Drawings. The Contractor shall coordinate the location of their temporary facilities with the Owner.

1.03 WORK INCLUDED HEREIN, BUT SPECIFIED IN OTHER SECTIONS

A. Article 9, Volume 1

B. Section 01 14 16, COORDINATION AND SITE CONDITIONS

C. Section 01 50 00, CONSTRUCTION FACILITIES AND TEMPORARY CONTROLS

PART 2 PRODUCTS

2.01 TEMPORARY FACILITIES

A. The Contractor shall provide all temporary facilities as required for performing the work. See Article 9, Volume 1 and Section 01 50 00, CONSTRUCTION FACILITIES AND TEMPORARY CONTROLS.

PART 3 EXECUTION

3.01 COORDINATION

A. The project site is located within property owned by the City of Bullhead City for their existing wastewater treatment system.

B. Before move in and site preparation, the Contractor shall notify and coordinate with the Owner's representative. Contact person is Chad Hunter, Utility Manager at address 901 Richardo Avenue, Bullhead City, Arizona and telephone number 928-763-7299.

C. Coordination required prior to the start of construction as specified in Section 01 14 16, COORDINATION AND SITE CONDITIONS shall be completed before move in and site preparation.

3.02 CLEARING THE SITE

A. As specified in Section 31 11 00, CLEARING AND GRUBBING.

3.03 LAYOUT

A. Set up construction facilities in a neat and orderly manner within designated area at location of choice. Accomplish all required work in accordance with applicable portions of these Specifications. Confine operations to work area shown.

3.04 OBSTRUCTIONS

A. Some obstructions may not be shown. Bidders are advised to carefully inspect the existing site before preparing their proposals. The removal and replacement of minor obstructions such as duct banks, fences, culverts, small piping, and similar items shall be anticipated and accomplished within the Contract Price, even though not shown or specifically mentioned.

B. Major obstructions encountered that are not shown on the Drawings, or could not have been foreseen by visual inspection of the site prior to bidding, should immediately be brought to the attention of the Engineer. The Engineer will make a determination for proceeding with the work. If the Engineer finds that the obstruction adversely affects the Contractor's costs or schedule of completion, a proper adjustment to the Contract will be made in accordance with the General Conditions.

END OF SECTION 02 01 90

PART 1 GENERAL

1.01 WORK INCLUDED

A. This section covers the labor and materials necessary for the work associated with the demolition of various structures, piping, sidewalk, and other items as required for the construction and installation of the work associated with this project.

B. The following existing facilities are scheduled for demolition, abandonment, salvage, modification, or relocation as indicated on the Drawings:

1. Plenum room divider wall in the existing blower building.

2. Buried SC and NaOH piping as needed to accommodate new construction.

3. Temporary removal of UW piping as needed to accommodate new construction.

4. Other items as identified during construction. Coordinate removal with Owner and Engineer.

1.02 GENERAL

A. See the GENERAL CONDITIONS and Division 01 00 00, GENERAL REQUIREMENTS, which contains information and other requirements that apply to the work specified herein and are mandatory for this project. In addition, all demolition work must be scheduled with the Owner a minimum of 21 calendar days before such work is to begin.

1.03 RELATED WORK SPECIFIED IN OTHER SECTIONS

A. The following sections describe some of the work closely related to this section. All demolition and salvage work performed by the Contractor shall be in accordance with these related Specifications:

1. Section 01 14 16, COORDINATION AND SITE CONDITIONS.

2. Section 01 50 00, CONSTRUCTION FACILITIES AND TEMPORARY CONTROLS

1.04 SUBMITTALS

A. Where temporary removal of UW pipe is necessary, submit a sequencing plan and schedule to show duration of service outage and any changes in location or materials when the service is restored.

PART 2 PRODUCTS

2.01 GENERAL

A. The Contractor shall provide all materials and equipment in suitable and adequate quantity as required to accomplish the work shown, specified herein, and as required to complete the project.

PART 3 EXECUTION

3.01 GENERAL REQUIREMENTS

A. All work shall be done in conformance with the rules and regulations pertaining to safety established by federal, state, and local authorities, and as specified elsewhere in these Specifications.

B. Examine existing buildings, structures, and other facilities indicated for demolition before starting work. Determine where demolition activities may result in structural deficiency or other similar unplanned event during demolition. Coordinate demolition sequencing and procedures to prevent structures from becoming unstable, collapsing, or otherwise failing before demolition is complete.

C. Determine where demolition may affect structural integrity, weather resistance, or other portions of adjacent buildings, structures, or facilities indicated to remain. Identify measures to protect adjacent facilities from damage.

3.02 SUMMARY OF DEMOLITION WORK

A. General:

1. The relocation of electrical feeds and remote terminal units from the existing blower building to the new Aeration Basin Blower Building will leave unused electrical equipment in the existing blower building. This equipment is to be left in place for demolition by the Owner unless it directly interferes with installation of the Work for this project.

2. Any piping, structures, or concrete encountered within the extent of new construction shall be removed completely to the extent required to accommodate the new construction. See Drawings for abandonment in place of adjacent facilities.

3. All work shall be performed in accordance with the constraints specified in Sections 01 14 16, COORDINATION AND SITE

CONDITIONS, Section 40 05 10, PIPING - GENERAL, and Division 26 00 00, ELECTRICAL.

B. Yard Piping, Electrical Conduits, and Miscellaneous Structures:

1. The Drawings indicate where existing pipes and appurtenances are to be removed, relocated, or replaced; and where new pipes and appurtenances, and electrical conduits are to be added. Not all locations may be marked on the Drawings. Any existing asphalt pavement, excess excavation materials, old pipes, old conduit, concrete, miscellaneous structures, and other materials removed to accomplish this work shall be disposed of off-site by the Contractor.

2. All work shall be performed in accordance with the constraints specified in Section 01 14 16, COORDINATION AND SITE CONDITIONS, Section 40 05 10, PIPING – GENERAL, and Division 26 00 00, ELECTRICAL.

3.03 DEMOLITION

A. The Drawings are based on the best available information, but the structures and facilities may differ. The Contractor shall be responsible for determining the work required by inspecting the site, and perform all work within the constraints as specified in Section 01 14 16, COORDINATION AND SITE CONDITIONS.

B. All equipment, materials, and piping, except as specified hereinafter to be salvaged or shown to remain in place, within the limits of the demolition shall become the property of the Contractor. Piping, thrust blocks, chunks of asphalt and concrete, etc., shall be removed from any area to be backfilled. The Contractor may remove additional pipe, fittings, etc. adjacent to those to be removed if these materials have salvage value to the Contractor and in turn would lower the cost of work.

C. Items shown to remain in place shall be protected from damage by the Contractor during the demolition, salvage, and modifications work.

D. The Drawings define the minimum portion of the structures and facilities to be removed. Unless shown otherwise on the Drawings, the Contractor may make rough cuts or breaks that are within the limits of demolition shown.

3.04 SALVAGE

A. No equipment has been identified for salvage to the Owner.

3.05 ASPHALT PAVEMENT/CONCRETE SIDEWALK AND CURB/GUTTER

A. Asphalt pavement, concrete sidewalk, concrete curb and gutter, and valley gutter shall be removed as shown on the Drawings and/or at locations where new structures, equipment, piping, and electrical corridors are to be installed. Remove the pavement or concrete and material below the pavement or concrete to a depth sufficient to allow replacement of pavement or concrete, base, and surface course materials to the depth and finish grade shown on the Drawings. Neatly cut edges of paving or concrete that meet with pavement or concrete that is to remain in a straight line with a pavement breaker, cutting wheel, saw cutter, or other approved means, as applicable. Asphalt pavement, concrete sidewalk, concrete curb and gutter, and concrete valley gutter removed at the site shall be disposed of offsite by the Contractor at his own expense.

3.06 OFFSITE REMOVAL

A. All material and items not specified to be salvaged and/or reused shall be removed and disposed of offsite by the Contractor as specified in Section 01 50 00, CONSTRUCTION FACILITIES AND TEMPORARY CONTROLS. The Contractor shall make all necessary arrangements for this disposal and shall bear any costs or retain any profit incidental to this disposal.

END OF SECTION 02 41 10

PART 1 GENERAL

1.01 STANDARD SPECIFICATION

A. All applicable portions of the specification Section 350 REMOVAL OF EXISTING IMPROVEMENTS in the MAG Standard Specifications for Public Works Construction shall apply with the following additions, deletions, and/or modifications. Modifications are listed below with numbers corresponding to the MAG Standard Specification.

350.4 PAYMENT: Delete this section.

END OF SECTION 02 41 20

PART 1 GENERAL

1.01 WORK INCLUDED

A. This item of work includes the formwork and shoring for cast-in-place concrete and the installation into formwork of items such as anchor bolts, pipe and pipe fittings, and other items to be embedded in concrete (but not including waterstops and other expansion or construction joint materials - see Section 03 15 00, EXPANSION, CONSTRUCTION, AND CONTROL JOINTS; or reinforcing steel - see Section 03 20 00, CONCRETE REINFORCEMENT).

1.02 RELATED WORK SPECIFIED IN OTHER SECTIONS

A. Submittals: Section 01 33 00.

B. Quality Control: Section 01 40 00.

C. Expansion, Construction, and Control Joints: Section 03 15 00.

D. Concrete Reinforcing: Section 03 20 00.

E. Cast-In-Place Concrete: Section 03 30 00.

F. Miscellaneous Metal Items: Section 05 50 00.

1.03 QUALITY ASSURANCE

A. Codes and Standards:

1. The Contractor shall design, construct, erect, maintain, and remove forms and related structures for cast-in-place concrete work in compliance with the American Concrete Institute (ACI) Standard ACI 347R, "Guide to Formwork for Concrete."

2. ACI 117, “Specifications for Tolerances for Concrete Construction and Materials.”

3. ACI 318, “Building Code Requirements for Structural Concrete.”

4. ACI 301, “Specifications for Structural Concrete.”

5. ACI 350, “Code Requirements for Environmental Engineering Concrete Structures.”

B. Allowable Tolerances:

1. The Contractor shall construct formwork to provide complete cast-in-place concrete work within tolerances in accordance with ACI 117 and ACI 318, or as follows, whichever is more stringent:

    a. Variation from plumb lines and surfaces: ¼-inch per 10 feet, but not more than 1-inch total in entire height from top to bottom for walls over 40 feet high.
    b. Exposed corners, control joints grooves and other conspicuous lines: ¼-inch in 20 feet maximum; ½-inch maximum in 40 feet or more.
    c. Depressions In Wall Surface: Maximum ¼-inch when 10-foot straightedge is placed on high points in any direction or at any location.
    d. Wall Thicknesses: Maximum ¼-inch minus or ½-inch plus from dimension shown.
    e. Variation from level or grade in slabs, and in arises: ¼-inch in 10 feet, 3/8-inch in 40 feet or more.
    f. Exposed horizontal grooves and other conspicuous lines: ¼-inch in 20 feet maximum and ½-inch in 40 feet or more.
    g. Slab Finish Flatness Tolerances: Floor surface shall not have crowns so high as to prevent 10-foot straightedge from resting on ¼-inch end blocks, nor low spots that allow a block of twice the tolerance in thickness to pass under the supported 10-foot straightedge.
    h. Finish Slab Elevation and Slope Tolerance: Within ½-inch of elevation specified except slabs which are designed and detailed to drain to floor drain or gutter shall adequately drain regardless of tolerances. Repair floor slopes in an approved manner if necessary to provide complete drainage.
    i. Slab Thickness: Maximum ¼-inch minus or ½-inch plus from thickness shown.
    j. Beams and columns physical dimensions tolerance: Maximum ¼-inch minus or ½-inch plus from dimension shown.
    k. Beam Elevations: Within ½-inch plus or minus of specified elevation. Where tops of beams become part of finished slab, refer to slab tolerances.
    l. Forms for sidewalks and driveways: Use standard steel forms or wood forms constructed and fastened to prevent movement. Set forms to true lines and grades, and securely stake in position. Tolerances shall conform to those for slabs.

2. Before concrete placement, the Contractor must check the lines and levels of erected formwork. The Contractor shall make corrections

and adjustments to ensure proper size and locations of concrete members and stability of forming systems.

3. During concrete placement, the Contractor must check formwork and related supports to ensure that forms are not displaced and that completed work will be within the specified tolerances.

1.04 SUBMITTALS

A. Samples: Prior to start of work, submit one sample each as follows:

1. Form ties.

B. Shoring Plan: Submit formwork and shoring plan for all walls greater than 8 feet in height and all elevated slabs stamped by a registered Arizona Professional Engineer. Plan must be submitted at least 15 working days prior to starting work.

1.05 COORDINATION, SEQUENCING AND SCHEDULING

A. Schedule work for embedded, buried, or other items of work that affects form layout before completing concrete formwork. Coordinate all work in this section with other sections of work in this Project Manual and the Drawings in forming and placing openings, slots, reglets, recesses, sleeves, bolts, anchors, other inserts, and components of other work.

PART 2 PRODUCTS

2.01 FORMS FOR EXPOSED FINISH CONCRETE

A. Unless otherwise shown, the Contractor shall construct formwork for exposed concrete surfaces with plywood, plywood-faced metal frames, hard plastic finished plywood, overlaid waterproof particle board, tempered concrete-form-grade hardboard, steel, or other panel-type materials, in new and undamaged condition, to provide continuous, straight and smooth as-cast surfaces and that create the specified appearance and texture of concrete surfaces. The Contractor shall furnish the forms in the largest practicable sizes to minimize the number of joints and to conform to the joint system shown on the construction Drawings. The Contractor shall provide form material with sufficient thickness to withstand the pressure of the newly placed concrete without bow or deflection.

B. Chamfer materials shall be lumber with dimensions of ¾-inch by ¾-inch, unless a different size is shown on the Drawings. Material must be non-absorbent, compatible with form surface, adequately attached, and fully

sealed on all sides to prevent loss of concrete or water between the two surfaces.

2.02 FORM TIES

A. The Contractor shall provide factory-fabricated, adjustable-length, removable or snap-off metal form ties with conical or spherical type inserts, designed to prevent form deflection and to prevent spalling concrete surfaces upon removal.

B. The Contractor shall provide ties so that portion remaining within the concrete after removal of exterior parts is at least 1-1/2 inches from the outer concrete surface except as otherwise specified. Form ties shall be provided which will not leave a hole larger than 1-inch diameter in the concrete surface. The holes shall be filled with non-shrink grout as specified in Section 03 30 00, CONCRETE.

C. Form ties and wire ties fabricated on the project site are not acceptable. Field modifications to factory fabricated form ties are not acceptable. Do not use wire ties of any kind. Ties shall withstand form pressures and limit form deflection to specified tolerances.

D. Flat bar ties for panel forms shall have plastic or rubber inserts with minimum 1-inch depth and sufficient dimensions to permit proper patching of tie hole.

E. Form ties shall not be used to support any embedded items in the concrete and shall not be in contact with any metallic embedded items.

F. Water Stop Ties:

1. Provide for water-holding structures or dry structures with access such as basements, tunnels, pipe galleries, etc., that are below finish grade.

2. Ties shall have either an integral steel water stop 0.103-inch thick and 0.625-inch in diameter tightly and continuously welded to tie, or neoprene water stop 3/16-inch thick and 15/16-inch in diameter whose center hole is ½ diameter of snap tie, or a molded plastic water stop of comparable size.

3. Flat snap ties meeting these Specifications may be provided.

4. In all cases, the water stop shall be considerably larger in area than tie cross-sectional area, oriented perpendicular to tie and symmetrical about center of tie.

5. Construct ties to provide positive means of preventing rotation or disturbance of center portion of tie during removal of ends and prevent water leaking along tie.

2.03 FORM COATING RELEASE AGENT

A. The Contractor shall provide commercial formulation form-coating compounds that will not bond with, stain, or adversely affect concrete surfaces and will not impair subsequent treatment of concrete surfaces requiring bond or adhesion, or impede the wetting of surfaces to be cured with water or curing compounds.

B. Use a ready-to-use water based material formulated to reduce or eliminate surface imperfections, containing no mineral oil, kerosene, or organic solvents. Material shall be environmentally safe involving no health risks within the work place and shall be VOC compliant with a maximum VOC content of 1.0 pounds per gallon, or less where local area restrictions are more stringent. Material shall be non-toxic after 30 days and be able to be used for potable water treatment plants. Formulate form reuse agent with rust inhibitor for steel form facing materials.

C. Form coating (non-staining form release agent) shall be:

1. Master Finish RL 211 by Master Builders Solutions/BASF Corporation.

2. DUOGARD II by W.R. Meadows.

3. Form Release WB by Lambert Corporation.

4. Grifcote LV-50 by Hill and Griffith Company.

5. Or equal.

2.04 DESIGN OF FORMWORK

A. The design of forms, shores, and bracing is the responsibility of the Contractor. Design shall be done prior to fabrication, placing orders, or use on the project. Design shall conform to applicable ACI and other code requirements to achieve concrete shape, line, and dimensions as shown on the Drawings.

B. The Contractor shall design, erect, support, brace, and maintain formwork so that it will safely support vertical and lateral loads that might be applied, until such loads can be supported by the concrete structure. Formwork shall

be constructed so that concrete members and structures are of correct size, shape, alignment, elevation, and position.

C. The Contractor shall provide shores and struts with positive means of adjustment capable of taking up formwork settlement during concrete placing and vibration operations, using wedges or jacks or a combination thereof and maintain specified tolerances. Trussed supports shall be provided when adequate foundations for shores and struts cannot be secured.

D. The Contractor shall support form facing materials by structural members spaced sufficiently close to minimize deflection. Forms placed in successive units for continuous surfaces shall be fitted to accurate alignment, free from irregularities, and within allowable tolerances.

E. Design joints in forms to remain watertight and withstand placing pressures without bulging outward or creating surface patterns. Do not use formwork that leaks concrete mortar.

F. Where poor formwork is used and finish obtained is less than specified, upgrade finish to an acceptable finish at no additional cost to the Owner.

G. Panel Deflections: Limit as required to achieve construction tolerances specified herein.

H. Design shall account for tolerances, form ties, finishes, architectural features, rebar supports, construction joint locations, and other nonstructural formwork requirements specified. Design formwork to accommodate waterstop materials in joints at locations indicated on the Drawings.

I. Design formwork strong enough to hold high liquid heads without form distortion and to meet tolerances as specified herein. Coordinate form design with admixture company information and concrete slump.

J. Structurally design forms, falsework, shoring, and other structural formwork and meet applicable safety regulations, current OSHA regulations, and other codes. Where noted or where formwork is of a critical nature (in terms of size, complexity, etc.), a licensed engineer shall prepare formwork, falsework, and shoring designs to meet these Specifications and to meet all federal and state requirements.

K. Meet applicable portions of ACI 347, ACI 301, ACI 350, ACI 318 current edition, and these Specifications.

2.05 REINFORCING SPACERS AND REBAR SUPPORTS

A. Walls:

1. Provide positive spacers or chairs specifically designed for wall forms to hold forms and reinforcing at correct dimensions and clearances.

2. Remove spacer or chair if not designed to remain in place as concrete is placed, consolidated, and proper support and spacing is achieved.

B. Columns:

1. Provide a positive spacer between column reinforcing and column forms to ensure adequate cover.

2. Remove spacer as concrete is place, consolidated, and proper support and spacing is achieved.

3. Provide concrete blocks of same strength and density as column concrete for permanent spacers and rebar supports designed to be left in place. Color shall match concrete.

PART 3 EXECUTION

3.01 FORM CONSTRUCTION

A. General: The Contractor shall construct forms complying with ACI Standards 301, 318, and 347R, to the exact sizes, shapes, lines, and dimensions shown, and as required to obtain accurate alignment, location, grades, level and plumb work in finish structures. All necessary detail work, construction aids, and embedded items shall be provided as required. Notify Engineer one full working day prior to concrete placement so forms can be observed for compliance. Correct defective work identified prior to delivery of concrete.

B. Design, erect, shore, brace and maintain formwork in accordance with ACI 301 to support vertical, lateral, static, and dynamic loads and construction loads that might be applied until concrete structure can support such loads.

C. The Contractor shall fabricate forms for easy removal without hammering or prying against concrete surfaces. Crush plates or wrecking plates shall be provided where stripping may damage cast concrete surfaces. Kerf wood inserts shall be provided for forming key-ways, reglets, recesses, chamfers and the like, to prevent swelling and assure ease of removal.

D. Forms for Exposed Concrete:

1. Construct formwork so concrete members and structures are of the size, shape, alignment, elevation, and position indicated, all within tolerance limits specified herein. Limit concrete surface irregularities designated by ACI 347R as Abrupt or Gradual as follows: Class B, ¼-inch.

2. The Contractor shall drill forms to suit the ties used and to prevent leakage of concrete mortar around the tie holes. The Contractor shall not splinter forms by driving ties through improperly prepared holes. Locate form ties in a uniform pattern and construct so that tie remains embedded in wall, except for removable portion at each end. Place ties at least 1-1/2 inches away from finished surface of concrete. Provide sufficient strength and quantity of form ties to prevent spreading of forms.

3. The Contractor shall not use metal cover slates for patching holes or defects in forms.

4. The Contractor shall provide sharp, clean corners at intersecting planes, without visible edges or offsets. Back joints with extra studs or girts to maintain true, square intersections.

5. The Contractor shall use extra studs, walers, and bracing to prevent bowing of forms between studs and to avoid bowed appearance in concrete. Narrow strips of form material which will allow the forms to bow shall not be used.

6. The Contractor shall assemble forms so that they may be readily removed without damage to exposed concrete surfaces.

7. The Contractor shall place carefully and accurately all bracing to prevent sagging or misalignment.

8. All forms shall be new or in good condition free from holes, indentations, or irregular surfaces.

9. The exposed concrete joints shall be formed with special care to assure proper alignment and uniform cross section.

10. The Contractor shall form molding shapes, recesses and projections with smooth-finish materials, and install these in the forms with sealed joints to prevent displacement.

E. Cleaning and Tightening: The Contractor shall thoroughly clean forms and adjacent surfaces to receive concrete. All chips, wood sawdust, dirt, or other debris shall be removed just before concrete is to be placed. All forms

shall be retightened immediately after concrete placement as required to eliminate leaks.

3.02 FORM COATINGS

A. The Contractor shall coat the contact surfaces of forms with form-coating compound before steel reinforcement is placed. No form coating shall be allowed on steel reinforcement or on previously cast concrete sections which abut the new concrete pour.

B. The Contractor shall thin form-coating compounds only with the thinning agent of type and in amount and under the conditions recommended by the coating compound manufacturer. Excess form-coating material shall not be allowed to accumulate in the forms or to come into contact with concrete surfaces against which fresh concrete will be placed. All form coatings shall be applied in compliance with the manufacturer's instructions.

C. Steel forms shall be coated with a non-staining, rust-preventative form oil or otherwise to protect against rusting. Rust-stained steel formwork will not be accepted. Coat contact surfaces of forms with a light uniform film (a coverage rate of 1,200 square feet per gallon or higher) of the surface consolidation agent. Apply to steel forms as soon as they are cleaned to prevent discoloration of concrete from rust. Do not get surface consolidation agent on concrete surfaces or reinforcing steel against which fresh concrete will be placed.

3.03 INSTALLATION OF EMBEDDED ITEMS

A. General: Set and build into the work anchorage devices and other embedded items required for other work that is attached to, or supported by, cast-in-place concrete. Use setting drawings, diagrams, instructions, and directions provided by suppliers of the items to be attached thereto. Securely anchor embedded items to prevent displacement during placement of concrete.

B. Edge Forms and Screed Strips for Slabs: The edge forms or bulkheads and intermediate screed strips for slabs shall be set to obtain the required elevations and contours in the finished slab surface. The Contractor shall provide and secure units to support the types of screeds required.

3.04 BEVELED EDGES (CHAMFER)

A. Form ¾-inch bevels at concrete edges, unless otherwise shown. Place in all forms to provide chamfer where concrete will have exposed projecting corners.

B. Where beveled edges on existing adjacent structures are other than ¾-inch, obtain Engineer's approval of size prior to placement of bevel form strip.

3.05 REMOVAL OF FORMS

A. General: Formwork not supporting concrete, such as sides of walls, and similar parts of the work, may be removed after cumulatively curing at not less than 50 degrees Fahrenheit for 24 hours after placing concrete, provided: (1) concrete strength is sufficient to withstand damage by form removal operation and the forces acting on it, and (2) that curing and protection operations are maintained.

B. Formwork supporting the weight of concrete, such as elevated slabs and other structural elements, may not be removed in less than 14 days unless approved otherwise by the Engineer, and not until the concrete has attained the minimum 28-day compressive strength as indicated by field cured test cylinders taken from that placement in accordance with ACI 301. Remove forms only if shores have been arranged to permit removal of forms without loosening or disturbing shores.

C. Contractor shall assume responsibility for damage resulting from improper and premature removal of forms.

D. Satisfy applicable OSHA requirements with regard to safety of personnel and property.

E. Do not remove supports and reshore prior to obtaining adequate field cured cylinder results.

3.06 SHORES AND RESHORES

A. For floors supporting shores under newly placed concrete, either leave original supporting shores in place, or install reshores or backshores. Shoring system and supporting slabs must resist anticipated loads. Locate reshores and backshores directly under a shore position unless designed otherwise by Contractor provided design. Comply with ACI 318, ACI 301, and recommendations in ACI 347R for design, installation, and removal of shoring and reshoring.

3.07 CONCRETE FINISHES

A. As specified in Section 03 30 00, CONCRETE.

3.08 BACKFILL AGAINST WALLS

A. Do not backfill against walls until concrete has obtained compressive strength equal to specified 28-day compressive strength and all permanent supporting structure is in place. Do not backfill for minimum of 7 days regardless of compressive strength. For water holding structures, do not backfill until leakage tests have been completed and passed.

B. Place backfill simultaneously on both sides of wall where required to prevent differential pressures.

3.09 FIELD TESTS

A. Wall Finish Tolerances: Test for compliance with tolerances as specified.

B. Slab Finish Tolerances and Slope Tolerances:

1. Floor flatness measurements will be made the day after floor is finished and before shoring is removed, to eliminate effect of shrinkage, curling, and deflection.

2. Support 10-foot long straightedge at each end with steel gauge blocks of thicknesses equal to specified tolerance.

3. Compliance with designated limits in four of five consecutive measurements is satisfactory unless obvious faults are observed.

4. A check for adequate slope and drainage will also be made to confirm compliance with these Specifications.

5. Slab tolerances may be tested per ASTM E1155, Standard Test Method for Determining Floor Flatness and Floor Levelness Numbers and all slab construction shall comply with ACI 302.1R-04, Guide for Concrete Floor and Slab Construction.

C. Finish Tolerance Failures: Repair or replace concrete as specified in Section 03 30 00, CONCRETE.

3.10 RE-USE OF FORMS

A. All forms to be re-used in following work shall be clean and surfaces repaired the satisfaction of the Engineer. Forms may only be re-used if the structural integrity of concrete and the aesthetics of exposed concrete are not compromised. Split, frayed, delaminated, or otherwise damaged form-facing material will not be acceptable. The Contractor shall apply new form-coating compound material to concrete contact surfaces as specified for new formwork.

B. When forms are extended for successive concrete placement, the Contractor shall thoroughly clean all surfaces, remove fins and laitance, and tighten forms to close all joints. All joints shall be secured and tightened to avoid offsets.

END OF SECTION 03 11 00

PART 1 GENERAL

1.01 WORK INCLUDED

A. Work necessary to furnish, install and complete, the concrete expansion, construction, and control joints including waterstops and premolded, pourable, and gun grade fillers.

1.02 RELATED WORK SPECIFIED UNDER OTHER SECTIONS

A. Submittals: Section 01 33 00.

B. Concrete Forming: Section 03 11 00.

C. Concrete Reinforcement: Section 03 20 00.

D. Cast-In-Place Concrete and Grout: Section 03 30 00.

E. Joint Sealants: Section 07 90 00.

1.03 SUBMITTALS

A. Product Data: Furnish for the following:

1. Joint fillers for horizontal and sloped joints.

2. Preformed control joints.

3. Waterstop(s) with installation requirements.

4. Sealants.

B. Shop Drawings: Furnish information listed below:

1. Plastic Type Waterstops: Details of construction joint types; show in sufficient detail waterstop support used in both concrete pours to demonstrate waterstop will remain secure until complete encasement.

2. Construction and Control Joints: Layout and location indicating type to be used.

C. Quality Control Submittals: Furnish the following documents:

1. Waterstop manufacturer's written instructions for product shipment, storage, handling, installation and repair.

2. Joint Filler and Primer: Manufacturer's written instructions for product shipment, storage, handling, application, and repair.

1.04 DELIVERY, STORAGE, AND HANDLING

A. Packing and Shipping: Prepare and protect materials for shipment in accordance with manufacturer's recommendations.

B. Acceptance at Site: Verify that plastic waterstops delivered meet the cross-section dimensions shown on the Drawings and manufacturer's reviewed product data prior to unloading and storage at the site.

C. Protect hydrophilic waterstop from premature exposure to moisture which may cause premature swelling of waterstop. Store waterstops under tarps to protect from oil, dirt, and sunlight.

PART 2 PRODUCTS

2.01 PLASTIC WATERSTOP

A. Extruded from an elastomeric plastic compound of which the basic resin shall be polyvinyl chloride (PVC). Reclaimed PVC in the compound is not acceptable. Provide factory fabricated waterstop corner transitions and intersections leaving only straight butt joint splices for the field.

B. Specific Gravity: Approximately 1.37.

C. Shore Durometer Type A Hardness: 65 to 80.

D. Performance Requirements: Corps of Engineers' Specification CRD-C-572.

E. Type: Center bulb with a number of parallel ribs or protrusions on each side of strip center.

1. Corrugated or tapered type water stops are not acceptable.

2. Standard waterstop geometry as shown.

F. Size: Four-inch with 3/16-inch web, 6-inch or 9-inch with 3/8-inch web, as shown on the details in the Drawings. Use 4-inch size only where specifically shown on the Drawings.

G. Thickness: Constant from bulb edge to the outside stop edge.

H. Minimum Weight per Foot of Water Stop:

1. 0.74 pounds for 3/16-inch by 4 inch.

2. 1.60 pounds for 3/8-inch by 6-inch.

3. 2.45 pounds for 3/8-inch by 9-inch.

I. Provide for at all construction, expansion and control joints indicated on the Drawings, and as specified in Part 3 EXECUTION.

J. Manufacturers and Catalog Numbers:

1. Sika Corporation/Greenstreak: Style 702 (4-inch by 3/16-inch), Style 732 (6-inch by 3/8-inch) and Style 735 (9-inch by 3/8-inch).

2. Vinylex Waterstop and Accessories: No. RB6-38H (6-inch by 3/8-inch) and No. RB9-38H (9-inch by 3/8 inch).

3. DCA Construction Products Durajoint Waterstop: Type 3A (4-inch by 3/16-inch), Type 9 (6-inch by 3/8-inch) and Type 10 (3/8-inch by 9-inch).

4. Or equal.

2.02 WIRE LOOPED OR HOG RING PLASTIC WATERSTOP

A. May be provided as an alternative to hereinbefore specified plastic waterstops without wire loops or hog rings.

B. Comply with hereinbefore specified material and geometry requirements of Article PLASTIC WATERSTOP, except as follows:

1. Add continuous galvanized wire looping at plastic water stop edge for convenience in positioning and securing waterstop in-place in the forms.

2. Add galvanized hog rings at 12 inches on center at plastic water stop edge for convenience in positioning and securing waterstop in-place in the forms.

C. Manufacturer and Catalog Numbers:

1. BoMetals Inc. Waterstops with hog rings: Catalog numbers RCB-4316LB (4-inch by 3/16-inch), RCB-638LB (6-inch by 3/8-inch) and RCB-938NT (9-inch by 3/8-inch).

2. Or approved equal.

2.03 HYDROPHILIC SWELLABLE WATERSTOP

A. Provide flexible strip applied waterstop comprised of bentonite clay and butyl rubber where specifically shown on the Drawings, or where otherwise approved by the Engineer. Hydrophilic swellable waterstop shall be Sika Corporation/Greenstreak Swellstop (3/4-inch by 1-inch size); Mineral Technologies/CETCO Building Materials Waterstop-RX 101 (3/4-inch by 1-inch size); or equal.

B. Accessories shall be provided as follows:

1. Provide manufacturer's recommended primer and adhesive to secure waterstop to concrete, or other specific surfaces as required to ensure watertight construction.

2. Provide concrete nails as required to secure waterstop in vertical applications to concrete surfaces, or in any location where concrete consolidation or placement methods may dislodge surface contact.

2.04 RETROFIT PLASTIC WATERSTOP

A. Where specifically shown on the Drawings, provide "Retrofit" plastic waterstop similar to Plastic Waterstop specified hereinbefore but designed for applications where new concrete meets an existing structure.

B. Manufacturers and Catalog Numbers:

1. Sika Corporation/Greenstreak: Style 667.

2. DCA Construction Products Durajoint Waterstop: Type 36RT.

3. Or equal.

C. Accessories shall be provided as follows:

1. Provide manufacturer's recommended epoxy to secure waterstop to existing concrete, or other specific surfaces as required to ensure watertight construction.

2. Provide stainless steel adhesive anchor bolts and batten bars as required to secure waterstop to existing concrete surfaces, as recommended by the waterstop manufacturer and also in accordance with Section 05 50 00, MISCELLANEOUS METAL ITEMS.

2.05 BOND BREAKER TAPE FOR EXPANSION JOINT

A. Adhesive-backed glazed butyl or polyethylene tape which will adhere to the premolded joint material or concrete surface.

B. Width: Same as the joint.

C. Location: As shown.

2.06 BOND BREAKER

A. Provide either bond breaker tape as hereinbefore specified or a bond prevention material, non-staining type, as specified in Section 03 30 00, CONCRETE, except where a tape is specifically called for.

2.07 PREMOLDED JOINT FILLER (PJF)

A. Asphalt Impregnated Bituminous Fiberboard or Felt Type: ASTM D994 or D1751, Fibre Expansion Joint as manufactured by W.R. Meadows, Inc.; Fiber Expansion Joint as manufactured by Masons Supply Company; or equal. Thickness as shown on the Drawings, or ½-inch.

B. Sponge Rubber Closed-Cell Neoprene: ASTM D1752, Type I; as manufactured by W.R. Meadows, Inc.; Masons Supply Company; or equal. Thickness as shown on the Drawings, or ½-inch.

2.08 PREFORMED CONTROL JOINT

A. One-piece, flexible, polyvinyl chloride joint former; VX2 Series as manufactured by Vinylex Waterstop and Accessories; or equal.

B. One-piece steel strip with preformed groove; Steelflex Strip Seal as manufactured by D.S. Brown; or equal.

C. Provide in full-length un-spliced pieces, where possible.

D. Provide only where specifically permitted by Drawings, size as shown.

2.09 POURABLE JOINT FILLERS

A. Pourable joint filler shall be approved for use in wastewater systems. The specific gravity of the in-place filler after curing shall be greater than 1.0. The manufacturers of the fillers shall provide written certification that the products are approved for use in wastewater systems. Filler shall be gun grade material of below listed products for sloping joints.

B. Manufacturers and Products:

1. W.R. Meadows, Inc.: No. 164 Polymeric sealing compound, hot-pour compound, or Hi-Spec Polymeric joint sealing hot-pour compound; or

2. Sunshine Supply Company: SOF-SEAL two-component polymeric material, cold-applied, self-leveling filler; or

3. W.R. Meadows Inc.: Pouthane SL, one-component, cold-applied polyurethane compound, self-leveling filler.

4. Or equal.

2.10 STEEL EXPANSION JOINT DOWELS

A. Dowels: Round smooth steel bars; ASTM A36.

B. Dowel Coating: Fusion bonded coating system consisting of 2 coats of 100-percent solids epoxy having a total thickness of 10 to 14 MDFT.

2.11 CONTROL JOINT FORMS

A. Provide a standard manufacturer's item causing a control joint in the slab while providing keying across the joint. It shall not leave any portion projecting at the finished surface and it shall interrupt at least 1/4 of the slab depth. The joint or the method of installation shall insure a straight joint deviating not more than 1/2-inch from a straight line.

B. Speed-E-Joint T-shaped plastic strip as manufactured by W.R. Meadows, Inc.; ZipStrip T-shaped plastic strip as manufactured by Superior Profiles; or equal.

2.12 ACCESSORIES

A. Joint Sealant: Joint sealant shall be as specified in Section 07 90 00, CAULKING AND SEALANTS. The type used shall be specifically intended for exterior, submerged control joint applications. A non-sag joint sealant shall be used for vertical joints and self-leveling for horizontal joints.

B. Nonshrink Grout:

1. As specified in Section 03 30 00, CONCRETE.

2. Compatible with joint sealant.

C. Roofing Felt: 30-pound asphalt-saturated; ASTM D226, Type II; or a tar-saturated roofing felt of equal quality.

D. Reinforcing Steel: As specified in Section 03 20 00, CONCRETE REINFORCEMENT.

E. Nails: Provide manufacturer approved attachment for securing bituminous type premolded joint filler.

F. Concrete Bonding Agent: As specified in Section 03 30 00, CONCRETE.

PART 3 EXECUTION

3.01 GENERAL

A. Locate joints as shown, or noted, on the Drawings. Conform to ACI 318.

B. Verify conformance of waterstops with dimensions shown and with reviewed product data prior to embedding waterstops in concrete.

C. Construct straight joints; make vertical or horizontal, except where walls intersect sloping floors.

D. Commence concrete placement after the joint preparation is complete.

E. Time Between Concrete Pours:

1. At least 2 hours must elapse after depositing concrete in long or high columns and/or heavy walls before depositing concrete in beams, girders, or slabs supported thereon.

2. For short columns and low height walls, 10 feet or less, wait at least 45 minutes prior to depositing concrete in beams, girders, brackets, column capitals, or slabs supported thereon.

3. Consider beams, girders, brackets, column capitals, and haunches as part of the floor or roof system and place monolithically with the floor or roof system.

4. Should concrete placement sequence result in cold joint located below finished water surface, install waterstop in joint prior to additional concrete placement. Notify Engineer prior to installing waterstop. Engineer shall approve preparations prior to concrete pour.

F. Provide waterstop type as indicated in Drawings. Where plastic (or PVC) waterstop is shown, provide only approved plastic waterstop. Where hydrophilic waterstop is shown, provide approved plastic or hydrophilic

water stop. Where retrofit plastic (or PVC) waterstop is shown, provide only approved retrofit plastic waterstop

3.02 SURFACE PREPARATION

A. Construction Joints: Prior to placement of abutting concrete, clean contact surface:

1. Remove laitance and spillage from reinforcing steel and dowels.

2. Roughen surface to a minimum of 1/4-inch amplitude:

a. Sandblast after the concrete has fully cured.
b. Water blast after the concrete has partially cured.
c. Green cut fresh concrete with high pressure water and hand tools.

3. Perform cleaning so as not to damage waterstop, if one is present.

4. Coat concrete surfaces above and below plastic waterstop with bond breaker. Do not get bond breaker on waterstop. For joints older than 60 days, use a concrete bonding agent as specified in Section 03 30 00, CONCRETE.

5. Avoid damage to waterstop.

6. Verify that proper type and size of reinforcing and dowels are provided.

B. Expansion Joints with Pourable Filler:

1. Use motorized wire brush or other motorized device to mechanically roughen and thoroughly clean concrete surfaces on each side of joint from plastic waterstop to the top of the joint.

2. Use clean and dry high pressure air to remove dust and foreign material, and dry joint.

3. Prime surfaces before placing joint filler.

4. Avoid damage to waterstop.

3.03 INSTALLATION OF WATERSTOPS

A. General:

1. Join waterstops at intersections to provide continuous seal as recommended by the waterstop manufacturer, and as specified hereinafter.

2. Center waterstop on joint, unless detailed otherwise on the Drawings.

3. Secure waterstop in correct position to avoid displacement during concrete placement.

4. Repair or replace damaged waterstop.

5. Vibrate concrete to obtain impervious concrete in the vicinity of all joints.

6. Joints in Footings and Slabs:

   a. Ensure that space beneath plastic waterstop is completely filled with concrete.
   b. During concrete placement make a visual inspection of the entire waterstop area as shown.
   c. Limit grout with concrete placement to elevation of waterstop in first pass, vibrate the grout and concrete under the water stop, lift plastic water stop to confirm full consolidation without voids, then place remaining concrete to full height of slab as shown.
   d. Apply procedure to full length of plastic waterstops.

7. Waterstops shall be provided where shown on the Drawings and at the following locations with any joints:

   a. Joints in parts of structures exposed to ground or water on one side and occupied by non-submerged equipment or by personnel on the other.
   b. Wall and slab joints of tanks and channels subject to water pressure. Waterstops shall be provided from the base to at least 6 inches above high water level.

B. Plastic Waterstop: Install in accordance with details shown and manufacturer's written instructions.

C. Hydrophilic Waterstop:

1. Inspect waterstop for premature swelling, discontinuity, and debris contamination prior to concrete pour. Replace unacceptable waterstop.

2. Adhere waterstop to concrete or other surfaces shown utilizing proper primer adhesive. For vertical applications, use manufacturer approved nails in addition to the primer adhesive to secure waterstop to concrete.

3. Primer shall be allowed to dry for two hours prior to application of waterstop.

4. Apply waterstop the same day as primer adhesive.

5. Protect waterstop from moisture, dirt, oil, and sunlight during the progress of work.

6. Install waterstop with 2 inches minimum clear cover to concrete face.

7. Waterstop shall be butt spliced pressing ends together ensuring no separation or air pockets.

D. Plastic Waterstop Splices and Joints: In accordance with plastic waterstop manufacturer's written instructions using a thermostatically controlled heating iron. Butt splice unless specifically detailed otherwise.

1. Allow at least 10 minutes before the new splice is pulled or strained in any way.

2. Finished splices shall provide a cross-section that is dense and free of porosity with tensile strength of not less than 80 percent of the unspliced material.

3.04 EXPANSION JOINT INSTALLATION

A. General:

1. Place bond breaker above and below waterstop when premolded joint filler and pourable joint filler is not used.

2. Premolded Joint Filler:

a. Sufficient in width to completely fill the joint space where shown.
b. If a waterstop is in the joint, cut premolded joint filler to butt tightly against the water stop and the side forms.

3. Precut premolded joint filler to the required depth, as detailed, at locations were joint filler or sealant is to be applied.

4. Form cavities for joint filler with either precut, premolded joint filler, or smooth removable accurately-shaped material.

5. Bed with 1-inch of grout for bonding in vertical joints. Vibrate concrete thoroughly along the joint form to produce a dense, smooth surface.

B. Bituminous Type Premolded Joint Filler:

1. Drive nails approximately 1-foot 6- inches on center through the filler to provide anchorage embedment into concrete prior to concrete placement.

2. Secure premolded joint filler in forms before concrete is placed.

3. Install in walks, at changes in direction at intersections, and at each side of driveway entrances.

C. Pourable Joint Filler:

1. General: Install in accordance with the manufacturer's written instructions, except as specified below:

a. Apply primer prior to pouring joint filler.
b. Fill entire joint above the waterstop with joint filler as shown.
c. Use masking tape on top of slabs at sides of joints; clean all spillage.

2. Place cold-applied, two-component fillers in accordance with manufacturer's written instructions.

D. Steel Expansion Joint Dowels:

1. Install coated dowels parallel to wall or slab surface and in true horizontal position perpendicular to the joint in both plan and section views so as to permit joint to expand or contract without bending the dowels.

2. Secure dowels tightly in forms with rigid ties.

3. Install reinforcing steel in the concrete as shown to protect the concrete on each side of the dowels and to resist any forces created by joint movement.

3.05 CONSTRUCTION JOINT INSTALLATION

A. Locate reinforcing and/or dowels as shown on the Drawings.

B. Install PVC waterstop or hydrophilic waterstop as shown on the Drawings.

C. Concrete surface to be dense and smooth.

D. Install bond breaker to concrete surfaces above and below water stop. For concrete older than 60 days, use a concrete bonding agent as specified in Section 03 30 00, CONCRETE.

E. Bed with 1-inch of grout for bonding in vertical joints. Vibrate concrete thoroughly along the joint form to produce a dense, smooth surface.

3.06 PREFORMED CONTROL JOINTS

A. Use only where specifically shown.

B. Locate flush, or slightly below the top of slab.

C. Install in accordance with manufacturer's written instructions in straight, maximum full-length pieces.

D. Steel Strip Type with Preformed Groove: Brace to withstand pressure of concrete during and after placement.

3.07 CONTROL JOINTS IN SLABS ON GRADE

A. Locate as shown on the Drawings. Where not indicated, locate at 13 foot maximum intervals in both directions. This applies to non-water holding structures. Construct control joints for a depth of at least one-fourth of concrete thickness unless indicated otherwise on the Drawings.

B. Construct with a manufactured, embedded, preformed control joint form or stop pour at each control joint using keyway forms. Install form with no offsets and in straight lines as specified elsewhere.

C. Grooved Joints for Sidewalks: Form control joints in sidewalks after initial floating by grooving and finishing each edge of joint to a radius of 1/8-inch. Repeat grooving of control joints after applying any surface finishes. Eliminate groover tool marks on concrete surfaces.

D. Sawed Joints: If specifically allowed on the Drawings, Contractor may form control joints with power saws equipped with shatterproof abrasive or diamond-rimmed blades. Cut 1/8-inch wide joints into concrete after approximately 4 to 12 hours when cutting action does not tear, abrade, or

otherwise damage concrete surface and before concrete surface develops random contraction joint cracks.

3.08 CONCRETE INSTALLATION AT JOINTS

A. As specified in Section 03 30 00, CONCRETE.

END OF SECTION 03 15 00

(This page intentionally left blank)

PART 1 GENERAL

1.01 WORK INCLUDED

A. This section includes the fabrication and placement of steel reinforcement for cast-in-place concrete structures, including bars, ties, supports, and welded wire fabric.

1.02 RELATED WORK SPECIFIED IN OTHER SECTIONS

A. Submittals: Section 01 33 00.

B. Expansion and Construction Joints: Section 03 15 00.

C. Cast-in-Place Concrete: Section 03 30 00.

D. Epoxy Anchoring of Concrete Reinforcing and Other Miscellaneous Metal Items: Section 05 50 00.

1.03 QUALITY ASSURANCE

A. Codes and Standards: The Contractor shall comply with all requirements of the following codes and standards (most recent edition) listed below or otherwise referenced in this Section, except as modified herein:

1. American Welding Society, AWS D12.1 "Recommended Practices for Welding Reinforcing Steel, Metal Inserts and Connections in Reinforced Concrete Construction."

2. Concrete Reinforcing Steel Institute, "Manual of Standard Practice."

3. American Concrete Institute, ACI 318 "Building Code Requirements for Reinforced Concrete."

4. American Concrete Institute, ACI 301 “Specifications for Structural Concrete.”

5. American Concrete Institute, ACI 315 "Manual of Standard Practice for Detailing Reinforced Concrete Structure."

6. Other Standard References:

a. ASTM A184 - Specification for Welded Deformed Steel Bar Mats for Concrete Reinforcement.
b. ASTM A1064 - Specification for Welded Wire, Fabric, Plain and Deformed, for Concrete Reinforcement.

c. ASTM A615 - Specification for Deformed and Plain Billet-Steel Bars for Concrete Reinforcement.
d. AASHTO M31- Deformed and Plain Billet-Steel Bars for Concrete Reinforcement.
e. AASHTO M32- Cold Drawn Steel Wire for Concrete.
f. AASHTO M54- Welded Deformed Steel Bar Mats for Concrete Reinforcement.
g. AASHTO M55- Welded Steel Wire Fabric for Reinforced Concrete.
h. AASHTO M221- Welded Steel Wire Fabric for Reinforced Concrete.

1.04 SUBMITTALS

A. Manufacturer's Data: The Contractor shall submit the manufacturer's specifications and installation instructions for all proprietary materials and reinforcement accessories where required or where proposed, including but not necessarily limited to:

1. Mechanical Threaded Connections and Metal Sleeve Connectors: Furnish current International Conference of Building Officials (ICBO) Research Report or equivalent code agency report listing findings to include acceptance, special inspection requirements, and restrictions.

B. Shop Drawings:

1. The Contractor shall submit shop drawings for the fabrication, bending, and placement of concrete reinforcement. All work shall comply with the ACI 315 "Manual of Standard Practice for Detailing Reinforced Concrete Structures." Submittals shall show bar schedules, stirrup and tie spacing, diagrams of bent bars, arrangements and assemblies. Indicate required lap lengths and construction joints. Provide submittal of proposed joint locations that differ from those shown on the Drawings for approval by the Engineer prior to submittal of reinforcing steel shop drawings.

2. The Contractor shall submit certification of grade, chemical analysis and tensile properties of the steel furnished.

3. Also see Section 01 33 00, SUBMITTALS.

C. Quality Control Submittals:

1. Mechanical Threaded Connections: Provide verification that device threads have been checked and meet all requirements for thread quality, in accordance with manufacturer’s published methods.

1.05 DELIVERY, HANDLING, AND STORAGE

A. All steel reinforcement delivered to the project site shall be bundled, tagged, and marked. Metal tags shall be used indicating the bar size, lengths, and other information corresponding to markings shown on placement diagrams in accordance with ACI 315.

B. The Contractor shall store concrete reinforcement materials at the site in a manner that will prevent damage and accumulation of dirt or excessive rust. Store to prevent contact with the ground. Protect all reinforcement from any contact with oil, grease, or petroleum based products of any kind.

PART 2 PRODUCTS

2.01 REINFORCING STEEL GRADE

A. Unless otherwise called for on the Drawings, all reinforcing steel for this project shall be uncoated deformed billet steel bars and conform to ASTM A615 Grade 60. Reinforcing which is welded shall conform to ASTM A706 Grade 60.

B. Deformed bar mats shall conform to the requirements of ASTM A184 and ASTM A615, Grade 60.

2.02 ACCESSORIES

A. Chairs and spacers shall be metal stock, designed for the purpose intended.

B. All accessories shall comply with Concrete Reinforcing Steel Institute (CRSI) "Recommended Practice for Placing Bar Supports, Specifications and Nomenclature."

C. The Contractor shall provide stainless steel accessories for sight-exposed concrete (exterior) and at surfaces exposed to moisture (such as water holding basins, etc.).

D. Slabs on grade where the base material will not support chairs, shall use supports with sand plates or horizontal runners to properly locate steel reinforcing in the slab.

E. Wire-bar type supports shall comply with CRSI recommendations. Wood, brick, or other materials will not be accepted.

F. Tie wire shall be 16-gauge, black, soft-annealed wire. Tie wire shall not be closer than 1-inch from surface of wall or slab after tying in place.

2.03 SPLICES AND MECHANICAL CONNECTIONS

A. Metal Sleeve: If used for splice, provide with cast filler metal, capable of developing in tension or compression 125 percent of specified yield strength of the bar, as manufactured by:

1. nVent Lenton Cadweld Metal-Filled Splicing System.

2. Or approved equal.

B. Mechanical Threaded Connections (Rebar Couplers): Metal coupling sleeve with internal threads which engage threaded ends of bars to be spliced, and develops in tension or compression 125 percent of the specified yield strength of the bar, as manufactured by:

1. nVent Lenton Taper-Threaded Reinforcing Steel Couplers.

2. Meadow Burke RC Series Threaded rebar Couplers.

3. OCM Inc. Threaded Rebar Couplers.

4. Or equal.

2.04 WELDED WIRE FABRIC

A. Welded-wire fabric shall be electrically welded, 65,000 psi yield strength minimum, and shall conform to ASTM A1064 (AASHTO M55 and M221) and ACI 318, latest edition.

B. Fabric shall be wide spaced standard, plain or deformed, provided in flat sheets.

PART 3 EXECUTION

3.01 FABRICATION

A. General: The Contractor shall fabricate reinforcing bars to conform to required shapes and dimensions, with fabrication tolerances complying with CRSI "Manual of Standard Practice", ACI 117, ACI 301, and ACI 318. Bend reinforcement cold. In case of fabricating errors, the heating, re-bending or straightening of reinforcement will not be permitted.

3.02 GENERAL REQUIREMENTS

A. Meet requirements in the CRSI manual titled, "Placing Reinforcing Bars".

B. Steel reinforcement shall be protected at all times from injury. When placed in the work, it shall be free from dirt, detrimental scale, paint, oil and other foreign substance. When steel reinforcement has detrimental rust, loose

scale and dust which is easily removable, it shall be cleaned by a satisfactory method, if approved.

C. All bars shall be bent cold, unless otherwise permitted. No bars partially embedded in concrete shall be field bent except as shown on the Drawings or otherwise permitted.

D. Details of concrete reinforcement and accessories not covered herein or on the Drawings shall be in accordance with ACI 315.

E. Notify Engineer when reinforcing is ready for inspection and allow sufficient time for this inspection prior to close-up of the forming system or placing concrete.

3.03 INSTALLATION OF REINFORCING STEEL

A. The Contractor shall clean reinforcement to remove all loose rust and mill scale, earth, ice, oil or grease, and other materials which reduce or destroy the bond between the concrete and reinforcing steel.

B. The Contractor shall position, support, and secure all reinforcement to prevent displacement by formwork, construction loadings, or concrete placement operations. Steel reinforcing shall be located and supported by metal chairs, runners, bolsters, spacers and hangers, as required. The reinforcement shall be placed to obtain the coverage for concrete protection noted on the Drawings. Where the coverage is not shown, the reinforcement shall be placed to obtain at least the minimum coverage specified hereinafter and/or in ACI 318.

C. The Contractor shall arrange, space, and securely tie bars and bar supports together with 16-gauge wire to hold reinforcement accurately and solidly in position during concrete placement operations. Wire ties shall be set so that the twisted ends are directed away from the exposed concrete surfaces. All reinforcement will be tied and secured in the correct position in the forms before placing concrete. Do not stab reinforcing into fresh placed concrete.

D. The Contractor shall provide a sufficient number of supports of adequate strength to carry the reinforcement. Reinforcing bars shall not be placed more than 2 inches beyond the last leg of any continuous bar support. Supports shall not be used as bases for runways for concrete conveying equipment and similar construction loads.

E. Supports or spacers of pebbles, pieces of rounded or broken stone, concrete rubble, broken brick or building blocks, metal pipe or wooden blocks will not be permitted.

F. Space reinforcement bars with minimum clear spacing according to ACI 318, or equal to one bar diameter, but not less than 1-inch. If bars are indicated in multiple layers, place upper bars directly above lower bars.

G. Splices:

1. Standard reinforcement splices shall be done by lapping the ends, placing the bars in contact, and tightly wiring the splice together. The requirements of ACI 318 for minimum lap of spliced bars shall be provided. Use lap splices unless otherwise shown on the Drawings or permitted in writing by the Engineer. Stagger splices in adjacent bars.

2. No field welding or tacking of reinforcement will be permitted.

3. As an alternative, perform splices using metal sleeve as specified hereinbefore.

4. Vertical bars in columns shall be offset at least one bar diameter at lapped splices. To ensure proper placement, templates shall be furnished for all column dowels.

H. Unless otherwise shown on the Drawings, the Contractor shall provide minimum cover specified in ACI 318 or as follows:

1. Not less than 3 inches where the concrete is placed against the earth and without use of forms.

2. Not less than 1 ½-inches for No. 5 bars and smaller and not less than 2-inches for No. 6 bars and larger where concrete is exposed to the weather or in contact with earth, but placed in forms.

3. Not less than 1 ½-inches for interior slabs, walls, beams, and columns.

4. Not less than 2 inches for interior slabs, walls, beams and columns in contact with water or on the side of water.

I. The Contractor shall provide extra reinforcing at all openings in structural walls as shown on the Drawings. Place an equivalent area of steel around pipe or opening and extend on each side sufficiently to develop bond in each bar. Where welded wire fabric is used, provide extra reinforcing using fabric or deformed bars.

J. The Contractor shall notify the Engineer when reinforcing is in place so that an inspection of reinforcement placement can be made prior to the close-up of formwork or the placement of concrete.

K. Conform to ACI 301 for all placing tolerances.

L. Bars may be moved to avoid interference with other reinforcing steel, conduits, or embedded items. If moved more than one bar diameter or the stipulated tolerance, the Contractor shall consult with the Engineer to determine final placement.

M. At construction joints and before constructing concrete form work for next stage of construction, the Contractor shall clean all dowels, reinforcing bars and concrete surfaces. All loose material and foreign objects shall be cleaned out of forming before placement of concrete.

N. Field Bending:

1. Straightening and Re-bending: Do not straighten or re-bend metal reinforcement. Field bending of reinforcing steel bars is not permitted unless approved by the Engineer.

2. Unless permitted by Engineer, do not cut reinforcing bars in the field.

3.04 MECHANICAL SPLICES AND CONNECTIONS

A. Install as required by manufacturer with threads tightened as required by referenced ICBO Report.

B. Carefully inspect each splice and verify that each component meets manufacturer's and ICBO requirements.

C. Maintain minimum edge distance and concrete cover.

3.05 WELDED WIRE FABRIC PLACING

A. Extend fabric to within 2-inches of edges of slab, and slab control joints; and lap splices at least 1 ½ courses of fabric or minimum 8-inches.

B. Tie laps and splices securely at ends and at least every 24-inches with 16-gauge black annealed steel wire.

C. Place welded wire fabric on #4 continuous bars at 4-foot 0-inches supported at proper distance above bottom of slab. All slab reinforcing is to be discontinuous at slab control joints.

D. Meet current ACI 318 and current Manual of Standard Practice, Welded Wire Fabric, by the Wire Reinforcement Institute regarding placement, bends, laps, and other requirements.

E. All welded wire fabric shall be provided in flat sheets. Rolled fabric will not be permitted.

END OF SECTION 03 20 00

PART 1 GENERAL

1.01 WORK INCLUDED

A. This section shall include constructing the cast-in-place concrete structures consisting of Portland cement, fine and coarse aggregate, water and selected admixtures, combined, mixed, transported, placed, finished, and cured, complete, as herein specified.

B. This section also includes grout for miscellaneous uses, surface hardeners, bonding agents, and other related concrete accessories and construction requirements.

C. Contractor is responsible to repair all cracks in water-holding structures as specified herein. The work shall be done by an experienced and certified applicator as specified herein.

1.02 RELATED WORK

A. Submittals: Section 01 33 00.

B. Quality Control: Section 01 40 00.

C. Concrete Forming and Accessories: Section 03 11 00.

D. Concrete Reinforcing: Section 03 20 00.

E. Expansion, Construction, and Control Joints: Section 03 15 00.

1.03 QUALITY ASSURANCE

A. The Contractor shall have available on-site a copy of ACI SP-15 "Specifications for Structural Concrete for Buildings with Selected ACI and ASTM References."

B. The Contractor shall comply with all requirements of the following codes and standards, except as modified herein:

1. ACI 301 “Recommended Practice for Concrete Inspection.”

2. ACI 318 "Building Code Requirements for Reinforced Concrete."

3. ACI 304 "Recommended Practice for Measuring, Mixing, Transporting and Placing Concrete."

4. ACI 305 "Recommended Practice for Hot Weather Concreting."

5. ACI 306 "Recommended Practice for Cold Weather Concreting."

6. ACI 308 "Recommended Practice for Curing Concrete."

7. ACI 350, “Code Requirements for Environmental Engineering Concrete Structures.”

C. Other references:

1. ASTM C31: Making and Curing Concrete Test Specimens in the Field.

2. ASTM C33: Specification for Concrete Aggregates.

3. ASTM C39: Test Method for Compressive Strength of Cylindrical Concrete Specimens.

4. ASTM C94: Specification for Ready-Mixed Concrete.

5. ASTM C143: Standard Test Method for Slump of Portland Cement Concrete.

6. ASTM C150: Specification for Portland Cement.

7. ASTM C260: Specification for Air-Entraining Admixtures for Concrete.

8. ASTM C309: Specification for Liquid Membrane-Forming Compounds for Curing.

9. ASTM C311: Test Methods for Sampling and Testing Fly Ash or Natural Pozzolans for Use in Portland Cement Concrete.

10. ASTM C494: Chemical Admixtures for Concrete.

11. ASTM C1260: Standard Test Method for Potential Alkali Reactivity of Aggregates (Mortar-Bar Method).

12. ASTM C1567: Standard Test Method for Determining the Potential Alkali-Silica Reactivity of Combinations of Cementitious Materials and Aggregate (Accelerated Mortar-Bar Method).

13. ACI 302: Concrete Floor and Slab Construction.

14. ACI 614: Specification for Concrete Placement.

15. ACI SP 66: Detailing Manual.

16. U.S. Army Corps of Engineers Concrete Research Division (CRD) C662: Determining the Potential Alkali-Silica Reactivity of

Combinations of Cementitious Materials, Lithium Nitrate Admixture and Aggregate (Accelerated Mortar-Bar Method).

D. Coordinate testing and Special Inspections as specified in Part 4, TESTING AND SPECIAL INSPECTIONS of this Section and as noted on the Drawings.

1.04 SUBMITTALS

A. Refer to Section 01 33 00, SUBMITTALS.

B. The Contractor shall submit copies of the manufacturer's data with the application and installation instructions for proprietary materials and items, including reinforcement and forming accessories, admixtures, bonding and patching compounds, joint systems, curing compounds, floor hardeners, grout, and others as requested by the Engineer.

C. A placement schedule shall be prepared by the Contractor and submitted to the Engineer for review prior to the start of concrete placement operations. Include information on time between adjacent pours and identification of the location of each type of construction joint to be used.

1. Cold Weather Concreting Plan: Submit a plan describing cold weather placement of concrete, including concrete mix design, freeze protection, placement, and curing methods as specified in this Section. Submit plan at least 14 days prior to placing concrete.

D. The Contractor shall furnish copies of the delivery tickets for each load of concrete delivered to the site and other information as specified under ASTM C94, Certification.

E. Concrete Mix Design Proposals

1. Concrete Mix: Submit each mix design to the Engineer for review at least 14 days before first use is planned. Include substantiating test data and mix design details, including aggregate gradation and source, test results on fine and coarse aggregate Alkali-Silica Reactivity (ASR), water/cement ratio, mix proportions, air content, slump, and strength tests. Substantiating data must include tests by an independent testing laboratory within the past 3 years verifying the requirements specified under "Part 2 Article PROPORTIONING AND DESIGN OF MIXES" and "PART 4 TESTING AND SPECIAL INSPECTIONS". Submit complete information for each mix design which has different strength, different aggregate size or gradation, different proportions or is to be transported differently. For previously used mix submit copies of at least 10 tests meeting these

specifications. Do not place any concrete until the mix design and substantiating data for that concrete has been reviewed.

2. Pumped Concrete: At least 14 days before starting work, submit details of proposed pumping operation, equipment to be used, and any required adjustments to mix designs. Do not pump concrete if Engineer feels an unsatisfactory concrete may result from the overall planned process and equipment.

F. To demonstrate their capabilities and experience, provide qualification data for Contractor's proposed independent testing agency that will provide the concrete mix design, trial mix batch mixtures, and initial mix design testing services.

G. Water-Holding Basin Repair Methods: As necessary if water holding basins fail tests or if damp spots or observed seepage is present as specified. Cracks shall be repaired by the epoxy or hydrophobic grout injection process. Submit crack injection data and procedures to Engineer for review. Crack repair personnel shall have a minimum of 5 years licensed and documented experience. Submit documentation of certification and past project experience including project name, location, type and amount of repair work completed, and contact name.

H. Crack Repair Report: Epoxy or hydrophobic grout injection materials manufacturer certification that crack repair was performed by a licensed and certified applicator per the manufacturer's recommendations.

I. Submit all reports resulting from testing and special inspections as specified herein and on the Drawings.

PART 2 PRODUCTS

2.01 PROPORTIONING AND DESIGN OF MIXES

A. The following mix properties are required for all concrete placement within forms, unless noted differently in design drawings:

1. Proportion and design of concrete mix shall meet the following requirements:

Strength at 7 days	2400 psi minimum
Strength at 28 days	4500 psi minimum
Maximum water/cement ratio	0.43 by weight
Slump at point of placement	
Without superplasticizer	3-5 inches
With superplasticizer	5-10 inches
Minimum Cement Content	6 sacks per cubic yard or

	564 pounds per cubic yard
Entrained Air	4.5-7.5% general 3-6% exterior slabs
Maximum Aggregate Size	¾-inch as defined below, unless shown otherwise on the Drawings.

2. Design shall be by an approved independent concrete mix and testing laboratory and a trial mix batch shall be made and tested by that laboratory. Average strength of cylinders in trial batch must exceed specified strength by 15 percent.

3. A previously used mix design may be used provided aggregate source is the same, the mixing equipment is the same, and provided at least 10 tests were made by an independent laboratory with results meeting these specifications.

4. If any of the first three 7-day cylinder tests fail to meet the specified 7-day strength, the mix shall be modified for more strength. Submit modified mix for review before use.

5. Adjustment to Concrete Mixes: Mix design adjustments may be requested by the Contractor when characteristics of materials, job conditions, weather, test results, or other circumstances warrant, at no additional cost to the Owner. Test data for revised mix designs and strength results must be submitted and accepted before using the mix adjustments.

6. Entrained Air: Air-entraining admixture shall be used unless otherwise shown or specified. Air-entraining admixture shall be added at the manufacturer's prescribed rate to result in concrete at the point of placement with an air content as specified herein (volume basis).

7. Concrete shall be mixed in conformance with ASTM C94.

B. Entrained air admixtures shall be used according to the manufacturer's prescribed rate. Test in accordance with ASTM C231.

C. The use of an accelerating agent is not permitted unless specifically authorized by the Engineer.

D. Combined Aggregate Grading Limits:

1. Aggregate size shall be 3/4-inch maximum for slabs, beams, columns, walls and footings.

2. Aggregate size shall be 3/4-inch maximum for structures with textured surfaces.

3. Grading limits for coarse aggregate shall be as follows:

Sieve Size	Percentage Passing	
	1-inch Max.	¾-inch Max.
2-inch	--	--
1-1/2-inch	-100	--
1-inch	95-100	-100
¾-inch	--	90-100
½-inch	25-60	--
3/8-inch	--	40-90
No. 4	0-10	5-20
No. 8	0-5	0-5

4. Grading limits for fine aggregate shall be as follows

Sieve Size	Percentage Passing
3/8-inch	-100
No. 4	95-100
No. 8	80-100
No. 16	50-85
No. 30	25-60
No. 50	10-30
No. 100	2-10
No. 200	0-4

5. The combined mixture of fine and coarse aggregate shall be such that not more than 1.5 percent passes the No. 200 sieve.

2.02 PORTLAND CEMENT

A. Meet ASTM C150, Type I or Type II, or Type I-II (sulfate resistant)

B. Non-Hydraulic Above-grade Structures: Use either Type I or Type II cement.

C. Hydraulic and Below-grade Structures: Use Type I-II (sulfate resistant) or cement.

2.03 AGGREGATES

A. Fine: Clean, sharp, natural sand, ASTM C33. Fineness modulus shall not be less than 2.5 nor more than 3.0. Materials passing 200 sieve shall be 4 percent maximum.

B. Coarse: Crushed stone or gravel, ASTM C33. Maximum size of coarse aggregate shall be ¾-inch as defined hereinbefore, unless otherwise indicated on the Drawings. Materials passing 200 sieve shall be 0.5 percent maximum.

C. Aggregates shall be natural, free from deleterious coatings, meeting ASTM C33, nonreactive. Thoroughly and uniformly wash before use. Reactivity must be determined by testing in accordance with ASTM C1293 and categorized in accordance with ASTM C1778. Tests done within the previous 12 months are acceptable. In accordance with ASTM C33, Appendix XI, paragraph X1.1, evidence of reactive problems on existing structures may be used to prove sources of aggregates are reactive and are unsuitable for use in the work. Import nonreactive aggregates if local aggregates are reactive

D. Aggregate soundness testing for fine and coarse aggregates shall be in accordance with ASTM C88 using a sodium sulfate solution.

E. Local aggregates not in compliance with the soundness and durability requirements of this standard shall not be used except with prior written approval of the Engineer and provided it can be shown by special testing or a record of past performance that these aggregates produce concrete of adequate strength and durability.

2.04 WATER

A. All water for concrete mixtures shall be clean, potable, and free from injurious substances and conforming to ASTM C94 and ASTM C1602. Water containing 2 percent or more common salt shall not be used and chloride levels shall be less than 500 parts per million.

2.05 AIR ENTRAINING ADMIXTURES

A. Air entraining admixtures shall be used in all concrete exposed to the weather and as specified for quality of concrete used, ASTM C260, except

that admixture shall be non-toxic after 30 days and contain no chlorides or other chemicals causing corrosion.

1. MasterAir AE 200 by BASF/Master Builders Solutions.

2. Sika AIR-260 by Sika Corporation.

3. EUCON Air Mix 200 by Euclid Chemical Company..

4. Or equal.

B. Must be compatible with water-reducing admixture. Concrete with air-entrainment admixture added shall maintain air percentage as batched, within 2 percent for minimum time required for placement into the structure.

2.06 WATER-REDUCING ADMIXTURES

A. Water-reducing admixtures shall conform to ASTM C494, Type A or Type D.

B. Complex, multi-component, non-chloride, non-corrosive admixture providing unique performance qualities unobtainable from conventional water-reducing admixtures.

C. Manufacturer and Product:

1. BASF/Master Builders Solutions Master Pozzolith 200, 210, or 322.

2. W.R. Grace and Company Daracem 19.

3. Euclid Chemical Company EUCON NW.

4. Or equal.

D. Must be compatible with air entraining admixture.

2.07 SUPERPLASTICIZERS

A. Meet ASTM C494 and use only Type F or G, of second or third generation type, or ASTM C1017, Type I.

B. Hold slump of 5 inches or greater for the time required for placement into the structure, or 2 hours minimum.

C. Type F Superplasticizer: Batch plant added to extend plasticity time, control temperature of fresh concrete, reduce water 20 to 30 percent, and give higher strengths at all ages.

D. Type G Superplasticizer: Batch plant added to extend plasticity time, maintain setting characteristics similar to normal concrete throughout its recommended dosage range and at varying concrete temperatures, reduce water 30 to 40 percent, and give high-early and ultimate strengths.

E. Superplasticizers for Hot Weather Placements:

1. A synthesized sulfonated complex polymer type superplasticizer containing no chlorides, other corrosive chemicals, or alkalines.

2. Add to concrete mix at manufacturer's recommended dosage to allow placement with concrete temperatures up to 90 degrees F.

F. Manufacturer and Product:

1. BASF/Master Builders Solutions Master Rheobuild 1000.

2. W.R. Grace and Company Daracem 19.

3. Euclid Chemical Company EUCON SP or 537.

4. Or equal.

2.08 FREEZE PROTECTION ADMIXTURE

A. ASTM C494 Type E admixture, non-chloride, specially formulated to provide protection from freezing down to 20 degrees F (-7 degrees C) until initial set has been reached and surface has been sealed.

B. Manufacturer and Product:

1. BASF/Master Builders Solutions MasterSet FP 20.

2. Euclid Chemical Company ACCELGUARD AcN 200.

3. Or equal.

C. Use is Contractor's option. If used, full responsibility for providing concrete meeting this Specification rests with the Contractor, including replacement of defective concrete and delayed costs.

2.09 CALCIUM CHLORIDE

A. Calcium chloride and products containing more than 0.1 percent chloride ions are not permitted. Provide admixture manufacturer's written certification that chloride ion content complies with specified requirements.

2.10 CONCRETE CURING MATERIALS

A. Do not use curing compound where additional finishes such as hardeners, paintings, and other special coatings are required. Use water curing as specified instead. Water shall be potable and not detrimental to concrete.

B. Absorptive cover shall be provided by burlap cloth made from jute or kenaf, weighing approximately 9 ounces per square yard and complying with AASHTO M182, Class 2 or ASTM C171, Type C.

C. A moisture retaining cover shall comply with one of the following:

1. Waterproof paper, ASTM C171, Type D.

2. Polyethylene film, ASTM C171, Type E.

3. Curing Compound: Resin based compound conforming to ASTM C309, with additional requirement that the moisture loss shall not exceed 0.030 gm/square cm/72 hours. Use Type 1 (clear without dye) for concrete not exposed to sunlight, Type 1D (clear with fugitive dye) for concrete exposed to sunlight, and Type 2 (white pigmented) for hot weather concreting. Curing compound shall be VOC compliant with a maximum VOC content of 2.90 pounds per gallon (350 grams per liter), or less where the project location regulations are more stringent.

D. Manufacturer's certification shall state that curing compound can be applied in one coat and shall show the quantity or coverage required to meet or exceed that above moisture retention.

E. Provide manufacturer's certification that curing compound is acceptable to the appropriate state agency or health department.

2.11 CRACK REPAIR MATERIALS

A. Two-component epoxy resin injection; conforming to ASTM C881, Types I, II, and IV, Grade 1 or 3, and Class B or C; and AASHTO M235. Epoxy crack repair material shall be Sikadur 35, Hi-Mod LV, by Sika Corporation; BASF/Master Builders Solutions MasterInject 1380; or equal.

B. In special applications, an expanding polyurethane chemical hydrophobic grout such as Sika Fix HH by Sika Corporation, or approved equivalent may also be considered.

2.12 NON-SHRINK GROUT

A. Non-shrink Grout Category I:

1. Non-shrink, non-metallic, non-gas liberating grout for use in filling tie holes in concrete, blockouts for gate guides, joints of precast

components or members, and grouting baseplates of columns that do not exceed one story in height shall be one of the following:

a. L&M Crystex by Laticrete International.
b. NS Grout or Dry Pack Grout by Euclid Chemical Company.
c. MasterFlow 110AN by BASF/Master Builders Solutions.
d. Sika Grout 328 by Sika Corporation.
e. Or equal.

2. All grout shall be a fluid consistency in use except that for formwork tie holes the grout shall be dry pack consistency and shall fill the conical section with dense grout hammered in with steel tool and steel hammer. Grout shall meet all requirements of ASTM C1107 and Corps of Engineers CRD-C261 and have a fluid grout minimum compressive strength of 5,000 psi at 7 days and 6,800 psi at 28 days.

3. Use Category II grouts for patching defects in walls and slabs after form removal.

4. No material other than water shall be added to the premixed grout at the jobsite. Follow manufacturer's instructions relative to mixing, placing, and curing.

B. Non-shrink Grout Category II:

1. Non-shrink grout with natural aggregate for use in high strength, precision support of machine bases of 25 horsepower or less; bases for precast wall sections, columns, and precast members more than one story in height; and patching defects in walls and slabs after form removal shall conform to the Corps of Engineers' Specification for Non-Shrink Grout, CRD-C621, ASTM C1107, and to these specifications. Fluid grout as determined by the flow cone, CRD-C611, shall have a minimum strength of 5,000 psi at 7 days and 7,000 psi at 28 days. The following listed grouts are acceptable for use as Category II grout (field test requirement shall be met):

a. HI-FLOW Grout by Euclid Chemical Company.
b. MasterFlow 713, by BASF/Master Builders Solutions.
c. SIKA Grout 328 by Sika Corporation.
d. Or equal.

2. No material other than water shall be added to the premixed grout at the jobsite. Follow manufacturer's instructions relative to mixing, placing, and curing.

C. Non-shrink Grout Category III:

1. Non-shrink grout for use in high strength, precision support of machine bases for machinery of 30 horsepower or greater and soleplates where very large loads and stresses from vibration and other dynamic loads are involved and when the equipment will be subject to thermal movements. Grout shall conform to the Corps of Engineers' Specification for Non-Shrink Grout, CRD-C621, ASTM C1107, and to these specifications. The following grouts are acceptable for use as Category III grout (field test requirements shall be met):

    a. MasterFlow 885 by BASF/ Master Builders Solutions.
    b. HI-FLOW METALLIC grout by Euclid Chemical Company.
    c. SIKA Grout 428-FS by Sika Corporation.
    d. Or equal.

2. The location for use, other than that specified above, shall be as shown on the Drawings and/or as specified hereinafter.

3. The grout shall be free of gas-producing or gas-releasing agents, free of oxidizing catalysts, free of inorganic accelerators, and free of chlorides. Provide performance characteristics when mixed to fluid consistency, 22 to 25 seconds (flow cone method, CRD-C611) as follows:

    a. When mixed and maintained at 45 degrees F (7 degrees C) or higher, no visible bleeding and/or settlement up to 2 hours on 1/2 gallon grout poured into gallon can, covered with glass plate to prevent evaporation.
    b. Grout shall be cured in accordance with grout manufacturer's instructions.
    c. Provide (2-inch by 2-inch cube) strengths as specified. Prepare specimens and test in accordance with ASTM C109 except as follows: Mix grout in accordance with manufacturer's instructions. Fill molds in two layers, puddling each layer gently with gloved finger five times; strike off excess grout; wipe edges of mold clean with rag and cover with steel plate clamped to mold until time to test. Seal cover 24 hours after placement.

4. The grout shall obtain a minimum compressive cube strength of 5,000 psi at 3 days and 9,000 psi at 28 days.

5. No material other than water shall be added to the premixed grout at the jobsite. Follow manufacturer's instructions relative to mixing, placing, and curing.

2.13 SURFACE (FLOOR) HARDENERS

A. Surface hardeners shall consist of a colorless (natural) aqueous solution of sodium silicate and magnesium and zinc flurosilicates suitable for application to cured or partially cured concrete surfaces and capable of reacting with the soluble calcium compounds present in the concrete to form a thin surface of increased hardness with reduced potential for dusting.

B. Approved proprietary hardeners include:

1. MasterKure HD 300WB by BASF/Master Builders Solutions.

2. Hornolith by Tamms Industries.

3. MED-CURE by W.R. Meadows Incorporated.

4. Or equal.

C. The solution shall be delivered ready for use at the job site.

2.14 CONTROL JOINT FORMS

A. Control Joint Forms: As specified in Section 03 15 00, EXPANSION, CONSTRUCTION, AND CONTROL JOINTS.

2.15 EPOXY BONDING AGENT

A. Two component material suitable for use on dry or damp surfaces. Provide material "Type", "Grade", and "Class", to suit project requirements. Meet the requirements of ASTM C881, Type I, II, IV, or V.

B. Products: Subject to compliance with specific project requirements, provide one of the following:

1. Sikadur-32 Hi-Mod by Sika Corporation.

2. Dural 452 MV or Euco 452 by Euclid Chemical Company.

3. CRACKBOND 2100 MV and MV-LPL by Adhesives Technology Corporation.

4. Or equal.

2.16 NEAT CEMENT GROUT FOR BONDING

A. Provide flowable neat cement grout for expansion and construction joints bonding consisting of one part Portland cement to 1-1/2 parts sand, with minimum 12 sacks of cement per cubic yard. Keep water to a minimum.

2.17 CONTROLLED DENSITY FILL, FLOWABLE FILL

A. Controlled density fill (CDF) or flowable fill shall be as specified in Section 31 23 23, FLOWABLE FILL.

2.18 GROUT FILLET OR TOPPING FOR PROCESSING EQUIPMENT

A. Purpose of grout topping is to provide a smooth, even surface equipment to operate on. Obtain tolerance and finish requirements from manufacturer.

B. Components: Screened sand, water, water reducing admixture, fiber reinforcing, cement, pozzolan, and other admixtures.

C. Consistency: As required for placement, tolerance, bond, and strength, and as specified hereinafter in Part 3 EXECUTION for Screed Finish on Clarifier Slabs.

D. Design Strength: 4,000 psi at 28 days minimum. Provide minimum cement content specified hereinafter, regardless of strength.

E. Minimum Cement Content: 536 pounds per cubic yard. Pozzolan shall be 30 percent of the total cementitious content.

F. Cement: Type II.

G. Water/ Cementitious Ratio: 0.35 maximum.

H. Use water reducing admixtures.

I. Use fiber reinforcing as specified hereinbefore to provide greater control of cracking.

J. Entrained Air Content: 4% to 6%.

K. Slump shall be as required to maintain a homogeneous mix and to allow placement to meet equipment manufacturer's requirements.

L. Combined Aggregate Gradings:

1. Combine aggregates for grout in proportions that will provide a mixture within grading limits shown below, unless otherwise approved in writing by Engineer:

Sieve Sizes	Percentage Passing Sand for Grout
No. 4	95 – 100
No. 8	80 – 100
No. 16	50 – 85
No. 30	25 – 60
No. 50	10 – 30

No. 100	2 – 10
No. 200	-

PART 3 EXECUTION

3.01 CONCRETE MIXING

A. The materials for concrete shall be mixed at an acceptable and established concrete batch plant. Meet ACI 304 current edition, ASTM C94, ACI 301, ACI 302, and other requirements as specified for mix design, testing, and quality control.

B. Ready-mix or portable temporary batch plant concrete shall comply with the requirements of ASTM C94, ACI 301, ACI 302.1R, ACI 304R, and as herein specified:

1. Use of a portable temporary batch plant shall be only as approved by Engineer. Submit data on portable temporary batch unit to demonstrate conformance with referenced standards and these specifications.

2. Batching equipment shall be such that the concrete ingredients are consistently measured within the following tolerances: 1 percent for cement and water, 2 percent for aggregate, and 3 percent for admixtures.

3. The addition of water to the mix at project site must be approved by the Engineer and the maximum water-cement ratio shall not be exceeded.

4. Machine mix concrete. Begin mixing within 30 minutes after the cement has been added to the aggregates.

5. Concrete shall be discharged at the job within 1-1/2 hours after water has been added to the cement and aggregates or cement batched with the aggregates, unless a longer time is specifically authorized by the Engineer.

6. During hot weather or under conditions contributing to rapid setting of concrete, a shorter mixing time than specified in ASTM C94 may be required:

a. When the air temperature is between 85 degrees Fahrenheit and 90 degrees Fahrenheit, the mixing and delivery time shall be reduced from a maximum of 1-1/2 hours to 75 minutes and when the air temperature is above 90 degrees Fahrenheit, the

mixing and delivery time shall be reduced to no more than 60 minutes.

7. Transport concrete from the mixer to the forms as rapidly as practicable. Prevent segregation or loss of ingredients. Clean transporting equipment thoroughly before each batch. Do not use aluminum pipe or chutes. Remove concrete which has segregated in transporting and dispose of off-site as directed.

C. Truck Mixers:

1. Equip with electrically actuated counters to readily verify the number of revolutions of the drum or blades.

2. Counter:

a. Resettable, recording type, mounted in driver's cab.
b. Actuated at time of starting mixers at mixing speeds.

3. Performance Requirements:

a. Truck mixer operation shall provide a concrete batch as discharged within acceptable limits of uniformity with respect to consistency, mix and grading.
b. If slump tests taken at approximately the 1/4 and 3/4 points of the load during discharge give slumps differing by more than 1 inch when specified slump is 3 inches or less, or differing by more than 2 inches when specified slump is more than 3 inches, discontinue use of truck mixer unless causing condition is corrected and satisfactory performance is verified by additional slump tests.
c. Check mechanical details of mixer, such as water measuring, and discharge apparatus, condition of blades, speed of rotation, general mechanical condition of unit, and clearance of drum before attempting to reuse unit.

4. Do not use non-agitating or combination truck and trailer equipment for transporting ready-mixed concrete.

D. Mixing Process:

1. Concrete Volume in Truck:

a. Limit to 63 percent of total volume capacity per ASTM C94 when truck mixed.
b. Limit to 80 percent of total volume capacity when central mixed.

2. Mix each batch of concrete in truck mixer for minimum 70 revolutions of drum or blades at rate of rotation designated by equipment manufacturer as mixing speed.

3. Perform additional mixing, if required, at speed designated by equipment manufacturer as agitating speed.

4. Place materials, including mixing water, in mixer drum before actuating the revolution counter for determining the number of mixing revolutions.

E. Superplasticizers and Air Admixtures: Add at concrete plant only through equipment furnished and/or approved by admixture manufacturer. Equipment shall provide for easy and quick visual verification of admixture amount used for each dose. Discharge amount to be added to each load of concrete into separate dispensing container, measured verified as to amount, then add to concrete. Re-dosing of concrete in the field.is not permitted, unless specifically approved by the Engineer.

3.02 PREPARATION

A. Pre-Placement Inspection:

1. Before placing concrete, the Contractor will inspect and complete the formwork installation, placement of reinforcing steel, and items to be embedded or cast-in. Reinforcing shall not be stabbed into freshly placed concrete.

2. The wood forms shall be wetted immediately before placing the concrete when form coatings are not used. Dampen subgrade before placing concrete for slabs on grade unless a vapor barrier is used.

3. The installation of joint materials shall be coordinated with the placement of forms and reinforcing steel.

4. Secure reinforcement in position and allow Engineer to review acceptability before placing concrete.

B. Sleeves, Anchors and Inserts: All sleeves, anchors, and inserts required shall be properly placed, as detailed in the Drawings, in the concrete formwork and securely anchored to prevent displacement during the placing of the concrete.

C. Contractor shall protect formwork overnight, and at other times as required, when adverse weather is forecasted to prevent snow or water from building up in forms or frost from depositing on forms or reinforcing steel.

3.03 CONCRETE PLACEMENT

A. Concrete shall be placed in compliance with the practices and recommendations of ACI Standards 301, 304, 318, and 614, and as herein specified:

1. Concrete shall be placed continuously or in layers of such thickness that no concrete will be placed on concrete which has hardened sufficiently to cause the formation of seams or planes of weakness within the section. If a section cannot be placed continuously, the Contractor shall provide construction joints as specified in Section 03 15 00, EXPANSION, CONSTRUCTION, AND CONTROL JOINTS. The placement of concrete shall be done at such a rate that concrete is still workable. Concrete shall be placed as near as practicable to its final location to prevent segregation due to re-handling or flowing. Do not subject concrete to any procedure which will cause segregation.

2. For flat work and slabs, concrete shall not be allowed to fall freely more than five feet. In no case shall concrete be allowed to freely drop more than eight feet, or as specified hereinafter for super plasticized concrete.

3. Screed concrete which is to receive other construction to the proper level to avoid excessive skimming or grouting.

4. Concrete which has become non-plastic and unworkable, or does not meet the required quality control limits, or which has been contaminated by foreign material shall not be used. Do not use re-tempered concrete. Remove rejected concrete from the project site and dispose of it at an approved location.

5. Concrete discharge time shall be less than 90 minutes after adding cement to water and aggregate.

B. Placing Concrete into Forms:

1. Concrete shall be placed in forms in horizontal layers not deeper than 18 inches and in a manner to avoid inclined or unplanned cold construction joints. Where placement consists of several layers, place each layer while the preceding layer is still workable to avoid cold joints.

2. Temporary spreaders in forms shall be removed when concrete placement has reached the elevation of such spreaders.

3. Concrete placed in forms shall be consolidated by mechanical vibrating equipment, capable of reaching all extents of the formwork, supplemented by hand-spading, rodding, and tamping. Use

equipment and procedures for consolidation of concrete in accordance with the recommended practices of ACI 309, to suit the type of concrete and project conditions. Vibration of forms and reinforcing will not be permitted.

4. Vibrators shall not be used to transport concrete inside of the forms. Insert and withdraw vibrators vertically at uniformly spaced locations not farther than the visible effectiveness of the machine. Place vibrators to rapidly penetrate the layer of concrete and at least 6 inches into the preceding layer. Do not insert vibrators into lower layers of concrete that have begun to set. At each insertion, limit the duration of the vibration to the time necessary to consolidate the concrete and complete embedment of reinforcement and other embedded items without causing segregation of the mix. Generally, this will be from 5 to 15 seconds in accordance with ACI 301.

5. Allowable Vertical Free Fall Drop to Final Placement:

   a. 5-feet in forms 8-inch or less wide and 8 feet in forms wider than 8 inches, except as hereinafter specified.
   b. Super-plasticized Mixes: Up to 15 feet of slump is over 6 inches.

6. Do not use aluminum pipe or other aluminum conveying devices.

7. Provide sufficient illumination for interior of forms so concrete at places of deposit is visible to permit confirmation of consolidation quality.

C. Conveyor Belts and Chutes:

1. Design and arrange ends of chutes, hopper gates, and other points of concrete discharge throughout conveying, hoisting, and placing system such that concrete passing from them will not become segregated.

2. Do not use chutes longer than 50 feet.

3. Minimum Slopes of Chutes: Angled to allow concrete of specified consistency to readily flow without segregation.

4. Conveyor Belts:

   a. Approved by Engineer.
   b. Wipe clean with a device which does not allow mortar adhering to the belt to be wasted.
   c. Cover conveyor belts and chutes.

D. Re-tempering: For concrete or mortar in which cement has partially hydrated, re-tempering is not permitted.

E. Pumping of Concrete:

1. General:

a. Pumping is the preferred method of placing concrete.
b. If pumped concrete does not produce satisfactory end results, discontinue pumping operation until the problem is corrected.
c. At Contractor's option, other approved methods of placement may be used.

2. Equipment:

a. Provide standby pump, conveyor system, crane and concrete bucket, or other system acceptable to Engineer, on site during pumping, for adequate redundancy to assure completion of concrete placement without cold joints in case of a primary placing equipment breakdown.
b. Minimum Pump Hose (Conduit) Diameter: 4 inches.
c. Replace pumping equipment and hoses (conduits) that are not functioning properly.
d. Do not use aluminum conduits for conveying concrete.

3. Field Control (For Pumped Concrete): Concrete samples will be taken for slump (ASTM C143) and test cylinders (ASTM C31 and C39) including air content and shrinkage specimens (ASTM C157) at placement (discharge) end of line, unless approved otherwise by the Engineer.

F. Maximum Size of Concrete Placements:

1. Limit size of each pour regardless whether slabs or walls, to allow for strength gain and some volume change due to shrinkage to take place. Size shall be as specified hereinafter.

2. Expansion and Construction Joints:

a. Unless otherwise shown, where expansion or construction joints are shown at approximately 60 to 70 feet spacing, intermediate construction joints are not required.
b. Where expansion or construction joints are not shown or where expansion or construction joints are spaced at larger distances than 70 feet, provide intermediate construction joints at maximum 40 feet unless approved otherwise in writing.

c. Locate joints, where not otherwise shown, as detailed on approved shop drawings.
d. Alternate pours at each side of expansion or construction joints with 10 days minimum curing time between pours.
e. Also see Section 03 15 00, EXPANSION, CONSTRUCTION, AND CONTROL JOINTS.

G. Removal of Water: Remove all water from space to be occupied by concrete.

H. Consolidation and Visual Observation:

1. Consolidate concrete with internal vibrators with minimum frequency of 8,000 vpm and amplitude required to consolidate concrete in section being placed.

2. Provide at least one standby vibrator in operable condition at placement site prior to placing concrete.

3. Consolidation equipment and methods shall meet ACI 309.

4. Provide sufficient windows in the forms or limit form height to allow visual observation of concrete.

5. Vibrator operator shall be required to see concrete being consolidated to ensure good quality workmanship, or an individual shall actually observe the vibration of concrete at all times and advise vibrator operator of any changes needed to ensure complete consolidation.

6. Consolidation and placement locations shall be planned and accomplished so that vibrators shall be inserted in the concrete as it is placed and in locations not to exceed a distance of 5 feet from point of placement.

I. Placing Concrete Slabs on Grade:

1. Prior to concrete placing, any area of subgrade on which concrete is to be placed shall be properly wetted. Concrete slabs shall be placed in a continuous operation, within the limits of construction joints, until the placement of a panel or section is completed. When in-place concrete has sufficiently set up (at least 24 to 36 hours), an alternate section shall be placed. All joints between sections shall be properly keyed. The edges of all sections shall be tooled with a minimum radius or chamfer edging tool.

2. Concrete shall be consolidated during placement operations using vibrating equipment, so that the concrete is thoroughly worked around reinforcement and other embedded items and into the corners.

3. Slab surfaces shall be brought up to the correct level with a straightedge and struck off. Bull floats or darbies may be used to smooth the surface, leaving it free from humps or hollows. Do not sprinkle water on the plastic surface. Do not disturb the slab surfaces prior to beginning finishing operations.

4. Control Joints for Non-Water Holding Slabs on Grade:

   a. Locate as shown on the Drawings. Where not indicated, locate at 13 foot maximum intervals in both directions.
   b. Construct with a manufactured, embedded, preformed control joint form or stop pour at each control joint using keyway forms. Install form with no offsets and in straight lines as specified elsewhere.
   c. Also see Section 03 15 00, EXPANSION, CONSTRUCTION, AND CONTROL JOINTS.

5. Reinforcing steel shall be continuously maintained in the proper position during concrete placement operations.

6. All exterior concrete slabs shall be sloped in a manner to prevent the collection of water.

J. Bonding:

1. Surfaces of set concrete at all joints shall be roughened, except where bonding is obtained by use of an approved concrete bonding agent, and the surfaces shall be cleaned of laitance coating, loose particles, and foreign matter. Surfaces shall be roughened in a manner to expose bonded aggregate uniformly and laitance, loose particles of aggregates, or damaged concrete at the surface shall be removed.

2. Bonding of fresh concrete to new concrete that has set, but is less than 60 days old or is not fully cured shall be done as follows:

   a. At joints between a footing and walls or columns, and between walls or columns and beams or slabs that they support, and elsewhere unless otherwise specified herein, dampen, but do not saturate, the roughened and cleaned surface of set concrete immediately before placing the fresh concrete.

b. At horizontal joints in exposed work, and at joints designed to contain liquids, dampen, but do not saturate, the roughened and cleaned surface of set concrete and apply a minimum 2-inch layer of neat cement grout.

c. Neat cement grout as specified hereinbefore shall be applied to a minimum thickness of 2 inches and a maximum of 3 inches. Fresh concrete shall be placed before the cement grout has attained its initial set. Limit concrete lift placed immediately on top of grout to 12 inches.

d. In all cases, neat cement grout shall be used for all construction and expansion joints of water holding structures.

e. An approved commercial bonding agent may be used in lieu of neat cement grout for non-water holding structures. The agent shall be applied to cleaned concrete surfaces in accordance with the printed instruction of the bonding agent manufacturer.

3. Epoxy bonding agent shall be applied in accordance with the manufacturer's recommendations for bonding to old concrete (more than 60 days old). Coat contact surfaces with bonding agent after mechanically roughening surface to a clean, rough surface.

K. Cold Weather Placing:

1. All concrete work, including concrete finishes, shall be protected from physical damage or reduced strength which could be caused by freezing or low temperatures, in compliance with the requirements of ACI 306 and ACI 318 and as herein specified.

2. Contractor shall protect formwork overnight, and at other times as required, when adverse weather is forecasted to prevent snow from building up in forms or frost from depositing on forms or reinforcing steel.

3. When the temperature of the surrounding air is expected to be below 40 degrees Fahrenheit during concrete placement or within 3 days (72 hours) thereafter, the temperature of the placed concrete shall be maintained at temperatures no lower than 60 degrees Fahrenheit for sections less than 12 inches in any dimension or 55 degrees for any other section. Heated water and/or aggregate shall be used in accordance with ACI 306.

a. The placed concrete temperature shall be maintained at or above the specified temperatures for curing for at least 7 days.

4. Frozen concrete materials containing ice or snow shall not be used. Concrete shall not be placed on frozen subgrade or on subgrade

containing frozen materials. The Contractor shall determine that the forms, reinforcing steel, and adjacent concrete surfaces are entirely free of frost, snow, and ice before placing any concrete.

5. The use of calcium chloride, salt, or other materials containing antifreeze agents or chemical accelerators shall not be allowed, unless authorized in writing by the Engineer.

6. Strength requirements may require additional protection and curing during cold weather due to delayed field strength gain.

7. Determine strength, attainment, and the requirement for continue protection, from field test cylinders, cured alongside the cast concrete structure.

8. Surface Temperature:

   a. The actual temperature of concrete surface determines effectiveness of protection, regardless of air temperatures or whether the objective is durability or strength.
   b. Contractor shall provide a sufficient number of thermometers placed on concrete surfaces spaced throughout the work to allow inspection and monitoring of concrete surface temperatures representative of all the work.

9. External Heating Units:

   a. Vent heating units and do not locally heat or dry concrete.
   b. Do not exhaust flue gases directly into an enclosed area.
   c. Ensure fire safety and fire prevention measures are enforced during use of heating units.

10. Maintain curing conditions which will foster normal strength development without excessive heat, and without critical saturation of concrete at the close of the protection period.

11. Limit rapid temperature changes, particularly before strength has developed sufficiently to withstand temperature stresses.

12. At end of the required period, discontinue protection in such a manner that the drop in temperature of any portion of concrete will be gradual and will not exceed, in 24 hours, 50 degrees F.

L. Hot Weather Placing:

1. When hot weather conditions exist that would seriously impair the quality and strength of concrete, place concrete in compliance with ACI 305 and as herein specified.

2. The ingredients shall be cooled before mixing to maintain the concrete temperatures at the time of placement below 80 degrees Fahrenheit. Mixing water may be chilled or chopped ice may be used.

3. The use of retarding admixtures will not be allowed, unless otherwise accepted in mix designs by the Engineer.

4. The forms shall be thoroughly wetted before placement of concrete. Make provisions for windbreaks, shading, fog sprays, sprinkling, or wet cover, when necessary.

5. Reflective Cracking:

   a. Prevent reflective cracking due to differential temperatures between concrete and reinforcing steel.
   b. If reinforcement is in direct sunlight or is more than 20 degrees F higher in temperature than concrete temperature before placement, wet reinforcement to cool it with water fog spray 10 minutes before placing concrete. Alternatively, reinforcing steel may be covered with water-soaked burlap if it becomes too hot, so that the steel temperature will not exceed the ambient air temperature immediately before embedment in concrete.
   c. Verify temperature of reinforcing is not more than 20 degrees F higher than fresh concrete.

3.04 JOINTS

A. Construction Joints: Construction joints shall be located and installed as shown on the Drawings in a manner that will not impair the strength and appearance of the structure. Construction joints, if not shown, shall be located only with approval of the Engineer to meet the requirements on Part 3 Article, Maximum Size of Concrete Placements, and as follows:

   1. The Contractor shall provide key-ways at least 1 ½-inch deep in all construction joints in walls, slabs, and between walls and footings of non-water holding structures.

   2. Construction joints shall be placed perpendicular to the main reinforcement and all reinforcement shall continue across construction joints.

   3. Construction joints shall be prepared as specified in ACI Standard 318, and as shown on the Drawings.

B. Expansion Joints: Expansion joints shall be located and installed as shown on the Drawings. Expansion joints shall be held down to receive the joint

sealant. The horizontal and vertical waterstop shall be welded together to provide a continuous watertight seal.

C. For bonding to new concrete horizontal construction joints, roughen the surface of the hardened concrete. Thoroughly clean and saturate with water, cover the horizontal surfaces only with two to three inches of neat cement grout, as hereinbefore specified, and immediately place concrete. New concrete is defined as less than 60 days old. Limit the concrete lift placed immediately on top of the grout to 12-inches thick and thoroughly vibrate to mix and consolidate the grout and concrete together.

D. Also see Section 03 15 00, EXPANSION, CONSTRUCTION, AND CONTROL JOINTS.

3.05 FINISH OF FORMED SURFACES

A. Rough Form Finish:

1. This finish shall include formed concrete surfaces buried from view by backfill in the finish work or covered by other construction, unless otherwise shown or specified. Any surface which will be exposed to the air or water in the completed structure shall be a smooth form finish.

2. The standard rough form finish shall leave the concrete surface with the texture imparted by the form facing material used, with tie holes and defective areas repaired and patched and all fins and other projections exceeding ¼-inch in height rubbed down or chipped off.

3. Fill snap-tie holes with non-shrink, non-metallic grout as specified herein. Patch honeycomb areas and rock pockets with grout as specified herein. Small air holes do not require patching.

B. Smooth Form Finish (Trowel Finish):

1. This finish includes formed concrete surfaces which will be exposed to the air or water in the completed structure or to be covered with a coating material applied directly to the concrete, or a covering material bonded to the concrete, such as water proofing, damp-proofing, painting, or other similar system.

2. A smooth form finish shall be provided by selecting form materials that will impart a smooth, hard, uniform texture and arranging them orderly and symmetrically with a minimum of seams. All defective areas shall be patched and repaired with all fins or other projections completely removed and smoothed.

3. For smooth form finish walls:

   a. Fill snap-tie holes with approved non-shrink, non-metallic color matched grout as specified herein.
   b. Grind off projections, fins, and rough spots.
   c. Repair other defects such as honeycomb areas, rock pockets, and rough spots resulting from form release agent failure or other reason with color matched non-shrink grout as specified herein.

4. For smooth form trowel finish slabs:

   a. Concrete floor finishing shall comply with ACI 301 and ACI 302.
   b. Finish by screeding and floating with straight-edges to bring surface to required finish elevation shown.
   c. While concrete is still green, but sufficiently hardened to bear a person's weight without deep imprint, wood float to true, even plane with no coarse aggregate visible.
   d. Use sufficient pressure on wood floats to bring moisture to surface.
   e. After surface moisture has disappeared, hand trowel concrete to produce smooth, impervious surface, free from trowel marks.
   f. Burnish surface with an additional troweling. Final troweling shall produce a ringing sound from trowel.
   g. Do not use dry cement or additional water during troweling. No excessive troweling will be permitted.
   h. Power Finishing:

      1) An approved power machine may be used in lieu of hand finishing for finishing concrete floors and slabs in accordance with directions of machine manufacturer.
      2) Do not use power machine when concrete has not attained the necessary set to allow finishing without introducing high and low spots in slab.
      3) Do steel troweling for slab by hand first.

C. Grout Cleaned Finish (Sacked Rubbed Finish):

1. A grout cleaned finish will be applied to all concrete surfaces as specified hereinafter, or which have received smooth form finish treatment, and are exposed to view. Surfaces exposed to water or on the inside of structures below the typical water surface level require a smooth form finish, but do not require a grout cleaned finish.

2. The grout cleaned finish will use one part portland cement to 1-1/2 parts fine sand by volume, and shall be mixed with water to a consistency of thick paint. Proprietary additives may be used at the Contractor's option. Standard Portland cement and white Portland cement amounts shall be blended as determined by trial patches, so that final color of dry grout will match adjacent surfaces.

3. The concrete surfaces shall be thoroughly wetted before the application of grout to the surfaces and to fill small holes. Excess grout will be removed by scraping and rubbing with clean burlap.

D. Broomed Finish:

1. Finish as specified for smooth form trowel floor finish, except omit final troweling and finish surface by drawing a fine-hair broom lightly across the surface.

2. Brooming: In same direction and parallel to expansion joints, or, in the case of inclined slabs, perpendicular to slope, except for round roof slab, broom surface in radial direction.

E. Sidewalk Finish:

1. Slope walks down ¼-inch per foot away from structures, unless otherwise shown.

2. Strike off surface by means of strike board and float with wood or cork float to a true plane, then flat steel trowel before brooming.

3. Broom surface at right angles to direction of traffic.

4. Lay out sidewalk surfaces in sections with an approved grooving tool as shown on the Drawings.

F. A 3/4-inch chamfer shall be provided at the top of all exposed walls, except where support angles are installed, and at exposed vertical corners.

G. In addition to the description of various finishes above, concrete surfaces shall be finished in accordance with ACI Standards 301 and 302 as scheduled below:

Surface	**Finish**

Interior Slabs	Smooth Trowel Finish
Exterior Slabs	Broom Finish
Exterior Concrete Above Final Grade	Grout Cleaned Sacked Rubbed Finish
Interior Walls of Water Basins Below Low Water Level; Exposed Interior Walls, Columns, Beams and Ceilings	Smooth Finish
Exterior Concrete Below Final Grade	Rough Finish, Correct Defective Areas including Stone Pocket and Fill Tie Holes
Sidewalks	Sidewalk Finish

3.06 CONCRETE CURING AND PROTECTION

A. General:

1. Freshly placed concrete shall be protected from premature drying and excessive cold or hot temperature, and maintained without drying at a relatively constant temperature for the 7 day period of time necessary for the proper hydration of the cement. Concrete damaged by improper curing or placement methods shall be replaced by the Contractor at no additional expense to the Owner.

2. Curing procedures shall begin immediately after placement of the concrete and continue for at least seven days or until concrete has attained 75 percent of its compressive strength in accordance with ACI 308.

B. Curing Method:

1. Liquid membrane curing shall be provided as follows:

a. The Contractor shall use a commercially produced liquid membrane forming curing compound for curing concrete which meets the requirements of ASTM C309. Use proper Type for conditions in the field.

b. Apply the specified membrane-forming curing compound to damp concrete surfaces as soon as the water film has disappeared. Apply uniformly in a 2-coat continuous operation by power spray equipment in accordance with the manufacturer's directions, and with second coat applied at right angles to the first. Recoat all areas which are subjected to heavy rainfall within 3 hours after initial application. Maintain the continuity of the coating and repair any damage to the coat during the entire 7 day curing period.
c. Membrane compounds shall not be used on surfaces which are to be covered with a coating material applied directly to the concrete or with a covering material bonded to the concrete, such as other concrete, liquid floor hardener, water-proofing, damp-proofing, flooring, paintings, and other coatings and finish materials.

2. Use approved water curing method where membrane compounds are not allowed.

3. For walls, use one of the following curing methods:

a. Method 1: Leave concrete forms in place and keep entire exposed surfaces wet at all times.
b. Method 2: Apply specified curing compound as specified, where allowed, immediately after removal of forms. Apply curing compound in two coats. Each coat shall be applied at the manufacturers recommended rate for one coat application.
c. Method 3: Continuously sprinkle 100 percent of all exposed surfaces.

4. For slabs, curbs, and sidewalks use one of the following curing methods:

a. Method 1: Protect surface by ponding.
b. Method 2: Cover with burlap or cotton mats and keep continuously wet.
c. Method 3: Continuously sprinkle exposed surface.
d. Other agreed upon method that will provide moisture to be present and uniform at all times on all surface of slabs.

C. Unformed surfaces shall be cured after finishing operations have been completed and as soon as marring of the concrete will not occur. The curing procedures shall continue for 7 days or until the concrete has attained 70 percent of its compressive strength in accordance with ACI 308.

D. Temperature of Concrete During Curing:

1. When the atmospheric temperature is 40 degrees Fahrenheit and below, the concrete temperature shall be maintained between 50 and 70 degrees Fahrenheit continuously throughout the 7 day curing period. When necessary, the Contractor shall make arrangements before the placement of concrete for heating, covering, insulation or housing as required to maintain the specified temperature and moisture conditions continuously throughout the concrete curing period. Cold weather protections shall comply with the requirements of ACI 306.

    a. Where water curing as specified herein for slabs is not possible, use an approved curing compound as herein specified at twice the manufacturer's recommended coverage per gallon.
    b. Where specified curing compound cannot be used, special methods using moisture shall be agreed upon prior to pouring the concrete slabs.
    c. Protect slabs during cold weather with polyethylene sheeting or other material inside required heated enclosure if foot traffic is permitted on slabs.

2. When the atmospheric temperature is 80 degrees Fahrenheit and above, or during other climatic conditions which will cause a rapid drying of the concrete, the Contractor shall make arrangements before the start of concrete placement for the installation of wind breaks or shading, and for fog spraying, wet sprinkling, or a moisture-retaining covering. The concrete shall be protected continuously for the 7 day concrete curing period. Hot weather concrete protection shall comply with the requirements of ACI 305.

3. The concrete temperature shall be maintained as uniformly as possible, and protected from rapid atmospheric temperature changes. Temperature changes in concrete which exceed 5 degrees Fahrenheit in any one hour and 50 degrees Fahrenheit in any 24-hour period shall be avoided and protected against.

E. During the curing period the concrete shall be protected from damaging mechanical disturbances including load stresses, excessive vibration and from damage caused by rain or flowing water. All finished concrete surfaces shall be protected from damage by subsequent construction operations. Any damage incurred shall be repaired by the Contractor at no additional expense to the Owner.

3.07 CONCRETE REPAIRS

A. Cracks in water-holding structures that are determined to have caused excessive leakage or damp spots, or if seepage is present on exposed surfaces:

1. Inject all cracks with crack repair materials as specified hereinbefore. Crack repairs shall be performed by a licensed applicator as specified hereinbefore and in accordance with the crack repair material manufacturer's recommendations, unless approved otherwise. Drain structure and inject cracks from the inside of the structure. Repair of all cracks shall be by the Contractor at no extra cost to the Owner.

B. Defective surface areas shall be repaired and patched with grout as specified hereinbefore immediately after removal of forms and as directed by the Engineer. All repairs shall be made by the Contractor at no extra cost to the Owner.

C. Repair of Formed Surfaces:

1. Formed surfaces which will be exposed-to-view or air in the completed structure and contain defects which adversely affect the appearance of the finish shall be repaired. The concrete with the defective surfaces shall be removed and replaced at no additional expense to the Owner if the defects cannot be repaired to the satisfaction of the Engineer. Surface defects include color and texture irregularities, cracks, spalls, air bubbles, honeycombs, and holes left by rods and bolts, fins, and other discolorations that cannot be removed by cleaning.

2. Concealed formed concrete surfaces that contain defects that adversely affect the durability of the concrete shall be repaired. If defects cannot be repaired, the defective concrete shall be removed and replaced at no additional expense to the Owner.

D. Repair of Unformed Surfaces:

1. Unformed surfaces such as monolithic slabs may be tested by the Engineer for smoothness and to verify that the surface planeness meets the tolerances specified for each surface and finish. Any low and high areas shall be repaired by the Contractor at no additional expense to the Owner as specified herein.

2. Unformed surfaces that contain defects which adversely affect the durability of the concrete shall be repaired. Surface defects include crazing, cracks in excess of 0.01-inch in width or which penetrate to the reinforcement or completely through non-reinforced sections

regardless of width, spalling, pop-outs, honeycomb, rock pockets, and other objectionable conditions.

3. High areas in unformed surfaces shall be repaired by grinding after the concrete has cured sufficiently so that repairs can be made without any damage to adjacent areas.

4. Low areas in unformed surfaces shall be repaired during, or immediately after, completion of surface finishing operations by cutting out the low areas and replacing with fresh concrete. The repaired areas shall be finished to blend into adjacent concrete. Proprietary patching compounds may be used when approved by the Engineer.

5. Defective areas, except random cracks and single holes not exceeding 1-inch diameter shall be repaired, by cutting the area out and placing fresh concrete. Defective areas shall be removed to sound concrete with clean, square cuts, and shall expose reinforcing steel with at least 3/4-inch clearance all around. Concrete surfaces in contact with patching concrete shall be dampened and brushed with a neat cement grout coating or approved epoxy adhesive, or a concrete of the same type or class as the original adjacent concrete. Place, compact, and finish as required to blend with the adjacent finished concrete. The repaired area shall be cured in the same manner as adjacent concrete.

6. Isolated random cracks in non-water holding structures and single holes not over 1-inch in diameter shall be repaired by the dry-pack method. Groove the top of cracks, and cut out holes to sound concrete. Clean off all dust, dirt, and loose particles. Dampen all cleaned concrete surfaces and apply by brush a neat grout coating. Place dry-pack before the cement grout takes its initial set. Mix dry-pack, consisting of one part Portland cement to 2-1/2 parts fine aggregate passing a No. 16 mesh sieve, using only enough water as required for handling and placing. Compact the dry-pack mixture in place and finish to match the adjacent concrete. Keep the patched areas continuously moist for not less than 72 hours.

7. Repair methods not specified above may only be used if approved by the Engineer.

3.08 SURFACE HARDENERS

A. Interior floor slabs of all new buildings shall receive an application of surface hardener as recommended by the manufacturer of the surface hardener.

B. Floors to receive hardener shall be thoroughly cured for at least 28 days, clean, unpainted, free from membrane curing compounds, and perfectly dry with all work above them completed. Apply liquid hardener evenly, using three coats, allowing 24 hours between coats, or as recommended by manufacturer.

C. Apply approved proprietary hardeners in conformance with the manufacturer's instructions. After the final coat is completed and dry, remove surplus hardener from the surface by scrubbing and mopping with water.

3.09 CLEANING OF STRUCTURES

A. Clean thoroughly all interior concrete surfaces using water under pressure. The cleaning method adopted should accomplish the following: (1) remove all deposits of foreign nature; (2) remove all growths; (3) clean the slopes, walls, top, and bottom; (4) avoid damage to the structure; and (5) avoid pollution or oil deposits by workers and equipment. All water used in cleaning the concrete structures should be disposed of before allowing water or sludge to the structure.

3.10 MISCELLANEOUS CONCRETE ITEMS

A. Equipment Bases and Foundations: Provide machine and equipment bases and foundations, as shown on Drawings. Set anchor bolts for machines and equipment to template at correct elevations, complying with certified diagrams or templates of manufacturer furnishing machines and equipment.

B. Grout base plates and foundations as indicated, using specified non-shrink grout. Use non-metallic grout for exposed conditions, unless otherwise indicated. Block out the original concrete or finish off a sufficient distance below the bottom of the machinery base to provide for the thickness of grout shown on the Drawings. After the machinery has been set in position and wedged to the proper elevation by steel wedges, the space between the bottom of the machinery base and the original pour of concrete shall be filled with a pourable non-shrinking type grout as hereinbefore specified.

3.11 REJECTIONS

A. Concrete Strength: Concrete strength shall be considered satisfactory if the average test of the two 28-day specimens exceeds the specified strength and neither specimen test falls below 95 percent of the specified strength. If the average strength of the two test specimens is less than specified and/or either specimen test is less than 95 percent of the specified strength, the concrete represented by the tests is rejected and must be removed and replaced at the Contractor's expense.

B. Alignment: Where concrete slabs or walls do not meet the alignment requirements, the Contractor must grind off irregularities until they comply. However, if such removal leaves less concrete section than indicated, the Engineer may reject concrete if they feel the remaining section would not be adequate.

C. Flatwork: Finished flatwork exceeding the tolerances of these specifications shall be repaired or replaced so that strength or appearance is not adversely affected. Follow Part 3 Article CONCRETE REPAIRS for repair work or as directed by Engineer.

D. Appearance: Concrete exposed to view with defects which adversely affect the appearance of the specified finish may be repaired, if possible in accordance with Part 3 Article CONCRETE REPAIRS. If, in the opinion of the Engineer, the defects cannot be repaired to equal the specified finish, the concrete shall be rejected.

E. Misplaced Members: Concrete members cast in the wrong location may be rejected if the strength, appearance, or function of the structure is adversely affected or misplaced items interfere with other construction.

F. Rejected Concrete: Rejected concrete shall be removed and replaced. Limits of removal shall be as directed by the Engineer to accomplish a structure equal in strength, serviceability, and appearance, to that which would have been achieved by acceptable concrete.

G. Leakage Repairs: Water holding structures with any visible seepage or leakage at joints or due to cracks or other imperfections, or for any other reason does not pass leakage test defined hereinafter shall be replaced or repaired by Contractor.

H. Expense of Repairs: The cost of all repairs, removal, replacement, etc., required by the provisions of this Article shall be borne by the Contractor.

PART 4 TESTING AND SPECIAL INSPECTIONS

4.01 GENERAL

A. Reference Structural General Notes on the Drawings with respect to testing and Special Inspections.

4.02 TESTING AGENCY/FIRMS AND COST

A. The Contractor shall provide the services of an independent Special Inspector certified by the appropriate jurisdiction to perform the types of inspections specified. Costs of Special Inspection shall be borne by the Contractor.

B. All quality assurance tests shall be made by an independent testing laboratory engaged by the Contractor Engineer shall direct when and where all tests are made and Contractor shall coordinate all pour scheduling with independent testing firm

C. The Contractor shall bear all costs of initial quality control testing. Where retesting is required by this section including tests of hardened concrete where cylinder strengths indicate high or low strength concrete, the Contractor shall bear all retesting costs.

4.03 TEST RESULTS

A. One copy of all tests shall be submitted to the Engineer within 48 hours of testing.

4.04 TESTS OF AGGREGATE

A. Contractor shall provide tests of aggregate before concrete work per ASTM C33 and ASTM C1293. Tests may be waived by Engineer if aggregates to be used have shown actual use within the previous 18 months to produce concrete or required strength, durability, water-tightness, fire resistance, and wearing qualities.

4.05 STRENGTH TEST OF CYLINDERS DURING WORK

A. Independent testing firm shall provide for test purposes, sets of four or five cylinders each, taken for each 50 cubic yards or portions placed each day. For 6-inch by 12-inch cylinders, provide four cylinders and test one cylinder per set at 7 days, two at 28 days, and retain one for backup. For 4-inch by 8-inch cylinders, provide five cylinders and test one cylinder per set at 7 days, three at 28 days, and retain one for backup.

B. Evaluation will be in accordance with ACI Standard Building Code Requirements for Reinforced Concrete (ACI 318 latest edition), and these Specifications. Where the term "building official" is used in ACI 318, term shall be redefined to "the Owner's representative".

C. Specimens will be made, cured, and tested by the independent testing firm in accordance with ASTM C31 and ASTM C39. The Engineer shall determine which concrete trucks are to be tested in any pour and shall direct the independent testing firm. Only the Engineer or the testing firm may transport specimens or cylinders from the site to the laboratory.

1. Provide a cure box with internal temperature monitoring device at the project site for initial cure of test cylinders. Construct and equip box to provide initial cure in accordance with ASTM C31.

D. Frequency of testing may be increased at discretion of Engineer.

E. Cold Weather Placement Tests:

1. During cold weather concreting, the independent testing firm will cast cylinders for field curing as follows. Use method which will produce greater number of specimens:

a. Six extra test cylinders from the last 100 cubic yards of concrete.
b. Minimum three specimens for each 2 hours of placing time or for each 100 yards.

2. These specimens shall be in addition to those cast by the independent testing firm for lab testing.

3. Test cylinders will be protected from the weather until they can be placed under same protection provided for the parts of the structure which they represent.

4. Keep field test cylinders in same protective environment as the parts of the structure they represent, to determine if specified strength has been obtained and no further protection is needed.

5. Test cylinders in accordance with applicable sections of ASTM C31 and C39.

6. Evaluation and Acceptance: As specified herein.

F. Contractor Requested Expedited Testing: If Contractor desires additional cylinders to be tested at different times than specified hereinbefore to accelerate the schedule, this may be requested in writing to the Engineer who will coordinate this with the Independent Testing Firm. The cost of extra test cylinders and strength tests will be paid by the Contractor.

4.06 SLUMP TESTS

A. Slump tests will be taken with each strength test and as directed by the Engineer in accordance with ASTM C143.

4.07 AIR CONTENT

A. ASTM C 173, volumetric method for lightweight or normal weight concrete; ASTM C 231, pressure method for normal weight concrete; one for each strength test set.

4.08 CONCRETE TEMPERATURE

A. ASTM C1064; one test hourly when air temperature is 40 degrees F and below and when 80 degrees F and above, and one test for each set of compressive strength specimens.

4.09 TEST OF HARDENED CONCRETE

A. Acceptance shall be based on concrete cylinder tests in accordance with Part 3 Article, REJECTIONS. Contractor will pay for additional test by coring per ASTM C42 or load tests for that portion of job where questionable concrete has been placed. Such additional testing will be accepted in lieu of cylinder tests. Results of rebound hammer tests will not be accepted except in defining problem areas.

4.10 WATER LEAKAGE TESTS

A. Purpose: Determine integrity of finished concrete and to show exposed wall surfaces are visually acceptable. Exposed shall mean all wall surfaces prior to backfilling, or application of any exterior coating system, and other permanently or temporarily exposed areas for all water holding structures.

B. All Water-Holding Structures:

1. Perform water leakage tests according to ACI 350.1 and as specified hereinafter.

2. Perform leakage tests after concrete has cured a minimum of 7 to 14 days and obtained its design strength, and before backfill, application of any exterior coating system, or other work which will cover concrete wall surfaces is begun.

3. Make other equipment, i.e., stop gates, sluice gates, valves, etc., or temporary bulkheads water-tight prior to test.

4. As an alternative to having watertight bulkheads, gates, or valves, accurately measure the leakage through gates, valves, and bulkheads with methods acceptable to Engineer. An assumed leakage through gates and valves based on manufacturer's recommendations is not acceptable.

5. Fill with water to maximum liquid level prior to leak testing, and maintain level for 48 hours for moisture absorption by concrete.

6. Close all valves and gates to the structure and measure the change in water surface for a 24-hour period.

7. During test period, examine exposed portions of structure for dampness or leaks and mark visible leaks or damp spots.

C. Test Evaluation Criteria:

1. For water-holding structures comprised entirely of new construction, an acceptable test shall have a drop in water surface in 24-hour period with basin full less than 1/10 of 1 percent of normal volume of liquid contained in water-holding structure, after accounting for evaporation and precipitation in open basins; and damp spots or seepage are not present on walls or other areas exposed to view prior to any backfilling.

2. Determine evaporation by floating an evaporation pan in structure during test period.

D. Excessive Leakage and Leakage Test Failure: If drop in water surface exceeds test evaluation criteria or if damp spots or seepage is visible in exposed surfaces prior to any backfilling, the leak test shall be considered as failing.

E. Repairs:

1. If leakage is excessive, or if damp spots or observed seepage is present on exposed surfaces, drain water-holding structure, repair all leaks and damp spots previously marked, and make necessary repairs, and retest basin.

2. Repair in accordance with these Specifications and as approved by Engineer.

F. Retest:

1. Refill water-holding structure and test for leakage until structure meets test criteria.

2. Successful Test: If liquid level criteria is met and damp spots and seepage problems are corrected, the retest will be considered acceptable.

G. Cost of all leakage tests, repairs, and retests shall be borne by the Contractor, at no extra cost to the Owner.

END OF SECTION 03 30 00

(This page intentionally left blank)

PART 1 GENERAL

1.01 WORK INCLUDED

A. This section covers the work necessary to furnish and install, complete, the reinforced hollow unit masonry including mortar, grout, caulking, and cleaning.

1.02 RELATED WORK SPECIFIED IN OTHER SECTIONS

A. Submittals: Section 01 33 00.

B. Quality Control and Testing: Section 01 40 00.

C. Steel Reinforcing: Section 03 20 00.

1.03 GENERAL

A. See CONDITIONS OF THE CONTRACT and Division 01 00 00, GENERAL REQUIREMENTS, which contain information and requirements that apply to the work specified herein and are mandatory for this project.

1.04 SUBMITTALS

A. Submittals shall be made in accordance with Section 01 33 00, SUBMITTALS in Division 01 00 00, GENERAL REQUIREMENTS. In addition, the following specific information shall be provided:

1. Manufacturer's Literature: Submit information illustrating the horizontal joint reinforcement and preformed control joint materials proposed for use.

2. Manufacturer's Certificate: Provide manufacturer's certificate(s) for the masonry units specified herein, in accordance with Section 01 66 40, MANUFACTURERS' SERVICES of Division 01 00 00, GENERAL REQUIREMENTS.

3. Grout and mortar mix designs and method of placing descriptions.

4. Product data for each different masonry unit, accessory, and other manufactured product indicated.

5. Shop drawings for reinforcing detailing fabrication, bending, and placement of unit masonry reinforcing bars. Comply with ACI 315 “Details and Detailing of Concrete Reinforcing” showing bar schedules, stirrup spacing, diagrams of bent bars, and arrangement of masonry reinforcement. Provide elevation view of all walls

showing arrangement of all reinforcement around openings, pocket, etc.

6. Material test reports prior to construction from a qualified independent testing laboratory employed and paid by Contractor indicating and interpreting test results relative to compliance of the following proposed masonry materials with requirements indicated:

   a. Mortar mix design complying with property requirements of ASTM C270.
   b. Grout mixes. Include description of type and proportions of grout ingredients complying with proportion requirements in ASTM C476. Include 28 day compressive strength test results.
   c. Masonry units complying with ASTM C90 and this specification.

1.05 QUALITY ASSURANCE

A. Field Testing Agency: Owner will employ and pay a qualified independent testing agency, approved by the Engineer to perform the field quality control tests as specified herein. To qualify for acceptance, an independent testing agency must demonstrate to Engineer's satisfaction, based on evaluation of agency-submitted criteria conforming to ASTM C1093, that it has the experience and capability to satisfactorily conduct the testing indicated without delaying the work.

B. Performance Requirements: Provide unit masonry that develops installed compressive strengths (f'm) at 28 days as indicated:

   1. Project Design - F'm = As indicated in Drawings or as specified herein.

   2. Mortar - F'm = As indicated in Drawings or as specified herein.

   3. Grout - F'c = As indicated in Drawings or as specified herein.

C. Preconstruction Verification: Contractor shall employ and pay a qualified independent testing agency (acceptable to the Engineer) to perform the following verifications to establish compliance of proposed materials with specified requirements:

   1. Concrete Masonry Unit Verification: For each different concrete masonry unit indicated, verify units conform to ASTM C90 and were sampled and tested per ASTM C140.

2. Unit Strength Method: For each type of wall construction indicated, test masonry units per IBC 2021 and ACI 530, Building Code Requirements and Specifications for Masonry Structures. Verify Project Design - F'm.

3. Verify mortar properties conform to ASTM C270, and shall conform to the Proportions Specifications therein.

4. Verify grout conforms to ASTM C476 with a minimum compressive strength of 2500 psi and was tested according to ASTM C1019.

D. Construction Testing: The Owner will employ and pay a qualified independent testing agency to perform the following construction testing, and any other testing as defined on the Drawings, to establish compliance of materials and construction with specified requirements. Retesting of materials failing to meet specified requirements shall be done at Contractor's expense. A copy of all testing reports shall be furnished to the Contractor and Engineer within 14 days of the tests.

1. Unit Strength Method Test: Test: For each type of wall construction requiring special inspection, test masonry units per the IBC 2021.

2. Test mortar properties per test methods of the IBC 2021.Standard.

3. Test grout compressive strength per the IBC 2021.Standard.

4. Test grout slump flow and Visual Stability Index when self-consolidating grout is delivered to the site.

E. Single-Source Responsibility for Masonry Units: Obtain exposed masonry units of a uniform texture and color, or a uniform blend within the ranges accepted for these characteristics, from one source and by a single manufacturer for each different product required.

F. Single-Source Responsibility for Mortar Materials: Obtain mortar ingredients of a uniform quality, including color for exposed masonry, from one manufacturer for each cementitious component and from one source or producer for each aggregate.

G. All work shall comply with The Masonry Society "Building Code Requirements and Specifications for Masonry Structures" (TMS 402-16, or latest edition) and "Specifications for Masonry Structures" (TMS 602-16, or latest edition).

PART 2 PRODUCTS

2.01 MASONRY UNITS

A. General:

1. The use of a manufacturer's name and model or catalog number is for the purpose of establishing the standard of quality and general configuration desired only. Products of other manufacturers will be considered in accordance with the General Conditions.

2. Units shall be of size shown or as specified hereinafter. Provide or cut special shapes for corners, jambs, lintels, and other areas shown or required. Special units shall match color and texture of standard units as close as possible. Where masonry units are placed so that the end of a unit is exposed, such as at a corner or intersection, the end of that block shall have the surface to match the color or texture of the sides of the other units.

3. Units shall be sound, dry, clean, free of cracks, and shall have reached the specified moisture content and compressive strength prior to placing in the structure.

4. Vertical cells to be grouted in all units covered under this Specification shall have vertical alignment sufficient to maintain a clear, unobstructed continuous vertical cell measuring not less than 2-inch by 3-inch.

5. The color and texture of the units shall be as approved by Owner.

B. Hollow Concrete Units:

1. Hollow concrete masonry units shall be medium weight load bearing units in accordance with ASTM C90, with minimum net-area compressive strength of 2,000 psi, unless specified differently in drawings.

2. Bearing block shall be certified by Underwriters Laboratory as Class C-3 or better fire retardant. All concrete block shall be manufactured using approved aggregates. All block shall be steam cured or shall be manufactured at least 90 days before being delivered to the project site.

3. The manufacturer shall certify that the masonry units meet all requirements of ASTM C90 including the moisture content and linear shrinkage requirements for intermediate conditions.

4. Size (width) shall be as shown on the Drawings. If not shown, standard size shall be manufactured to the following dimensions:

a. 8 inches wide by 8 inches high by 16 inches long nominal; 7-5/8 inches by 7-5/8 inches by 15-5/8 inches specified actual.

2.02 CEMENT

A. Type I or II, ASTM C150, Portland cement. Color shall be gray.

2.03 LIME

A. Lime putty shall be made from Type S hydrated lime and shall conform to ASTM C207. Lime shall be kept dry.

2.04 AGGREGATES

A. Hollow Concrete Units: Aggregates for hollow concrete units shall conform to ASTM C33 and ASTM C331 or shall be blended from aggregates conforming to these Specifications. Use the same type or types of aggregate throughout the project unless otherwise indicated or written permission is received from the Engineer. Aggregates used for the project shall produce concrete with a dry density of 125 pounds per cubic foot or more.

B. Mortar: Aggregate for mortar shall conform to ASTM C144, standard masonry type.

C. Grout: Aggregate for grout shall conform to ASTM C404, fine and coarse.

2.05 WATER

A. Water for mixing mortar and grout shall be potable, fresh, clean, and free of deleterious amount of acids, alkalies, chlorides, and organic materials.

2.06 MORTAR

A. Mortar shall be freshly prepared and uniformly mixed in the approximate ratio of 1 part Portland cement, ¼ part minimum to ½ part maximum lime putty or hydrated lime, damp loose sand not less than 2.25 and not more than 3 times the sum of the volumes of the cement and lime used, and shall conform to ASTM C270, Type S. Mortar shall attain a minimum compressive strength of 1,800 psi at 28 days. Color shall be natural gray.

2.07 MORTAR ADMIXTURES

A. Mortar admixtures are not allowed, unless otherwise indicated on the Drawings.

2.08 GROUT

A. Mix grout according to ASTM C94, as modified to use ingredients conforming to ASTM C476, except as hereinafter specified:

1. Proportions:

a. Grout for pouring shall be of fluid consistency conforming to the requirements of ASTM C476. Fine grout shall be used in most instances. Coarse grout may be used in grout spaces measuring 4 inches or more in both horizontal dimensions.
b. Grout for pumping shall be of fluid consistency and shall have not less than seven sacks of cement in each cubic yard of grout. The mix design shall be approved by the Engineer.
c. Fluid consistency shall mean a fluid suitable for pouring without segregation.

2. Grout Admixtures: Grout admixtures are not allowed, unless otherwise indicated on the Drawings.

3. Compressive Strength: The average 28-day compressive strength of the grout samples for each grout pour tested shall not be less than 2,500 psi, unless noted differently in design drawings.

4. Slump: Slump shall be 8 to 11 inches in accordance with ASTM C143.

2.09 PREFORMED CONTROL JOINT

A. Joint material shall be a solid PVC extrusion designed to fit standard sash block, ASTM D2287, Type PVC-654, such as VS Series PVC Control Joint, manufactured by Hohmann and Barnard, Inc.; Series 2900 PVC Control Joint, manufactured by Wire-Bond; Series BCJ PVC Control Joint, manufactured by BoMetals, Inc.; or equal.

2.10 REINFORCING STEEL

A. Deformed reinforcing bars as specified in Section 03 20 00, CONCRETE REINFORCEMENT.

B. Bond Beams: Block walls shall have horizontal bond beams containing reinforcing bars as designated on the Drawings.

C. Wire Reinforcement: Horizontal wire masonry wall joint reinforcement shall be installed where shown and as directed on the Drawings and shall be

Ladder Wire Mesh as manufactured by Hohmann and Barnard, Inc.; Ladder Wire as manufactured by Powers Steel and Wire, Inc.; or equal.

D. Vertical Reinforcement: Vertical reinforcing shall be installed as shown on the Drawings.

E. Caulking: The caulking compound shall be as specified in Section 07 90 00, CAULKING AND SEALANTS and shall be colored to match adjacent surfaces.

F. Lintels: Lintels shall be constructed using standard lintel blocks and reinforcing bars solid grouted in place as shown on the Drawings.

PART 3 EXECUTION

3.01 DELIVERY, STORAGE, AND HANDLING

A. Deliver masonry materials to project in undamaged condition. Masonry units shall be delivered to the job site on banded pallets with protective materials between layers.

B. Store and handle masonry units off the ground, under waterproof cover, and in a dry location to prevent their deterioration or damage due to moisture, temperature changes, contaminants, corrosion, and other causes. If units become wet, do not place until units are in an air-dried condition.

1. Wet block units may not be used in work until dried to the original moisture content and tested (testing cost is the responsibility of the Contractor) to meet ASTM C90.

C. Store cementitious materials off the ground, under cover, and in dry location.

D. Store aggregates where grading and other required characteristics can be maintained and contamination avoided.

E. Store masonry accessories including metal items to prevent corrosion and accumulation of dirt and oil.

F. Handle blocks carefully to avoid breakage and damage.

G. General Protection: Protect all concrete masonry unit products stored on site and the units that are part of the construction by vapor barrier sheeting or blankets. Storage of unused units shall be on pallets away from moisture, chemicals, earth or other contaminates. The top edge of units incorporated with the work shall be protected during off hours against moisture, freezing and wind.

3.02 WEATHER CONDITIONS AND CONSTRUCTION REQUIREMENTS

A. Do not lay masonry when the ambient temperature is below 32 degrees F on a rising temperature or below 40 degrees F on a falling temperature, or when there is a probability of such conditions occurring within 48 hours, unless express approval of the Engineer is obtained. In such case, make special provisions for heating materials and protecting the finished work. Protect masonry against freezing for a minimum of 48 hours after being laid. Protect the tops of walls at all times. Cover the tops of walls with waterproof paper when rain or snow is imminent, when heavy overnight frost is anticipated, and whenever work is discontinued.

B. Protect masonry construction from loss of moisture during the curing period when ambient air temperature of 90 degrees F or greater exists and when relative humidity is less than 50 percent. Use light fog spray nozzles to cure the mortar when these conditions exist. Provide a demonstration of the fog spray nozzles prior to starting the work.

C. Cold-Weather Requirements: Do not build on frozen subgrade or setting beds. Remove and replace unit masonry damaged by frost or freezing conditions. Comply with the following requirements:

1. Cold-Weather Construction: Heat mixing water and sand to produce mortar and grout temperatures between 40 and 120 degrees F. Maintain mortar and grout above freezing. Heat masonry units to 40 degrees F if grouting.

2. Cold-Weather Protection: Cover masonry with insulating blankets or provide enclosure and heat to maintain temperatures above 32 degrees F for 48 hours after construction. Install wind breaks when wind velocity exceeds 15 miles per hour.

D. Hot-Weather Requirements: Protect unit masonry work from excessive evaporation of water from mortar and grout. Do not apply mortar to substrates with temperatures of 100 degrees F and above.

3.03 BONDING WALL UNITS

A. Foundation:

1. The foundation shall be prepared for the initial mortar placement by one of the following methods:

a. Sandblasting the foundation and reinforcing dowels after the concrete has fully cured to remove all laitance and spillage and to expose sound aggregate.

b. Water blasting the foundation and reinforcing dowels after the concrete has partially cured to remove all laitance and spillage and to expose sound aggregate.

c. Green cutting fresh concrete with high pressure water and hand tools to remove all laitance and spillage from the foundation and the reinforcing dowels and to expose sound aggregate.

2. The foundation shall be cleaned of all loose material prior to the initial mortar placement.

B. Corners: Corners shall have a standard masonry bond for overlapping units with prefabricated corner piece and shall be grouted solid. Reinforcement shall be as shown.

C. Intersections: Intersecting walls shall be bonded with reinforcement as shown. The abutting wall shall not have a masonry bond with the straight wall.

3.04 LAYING REINFORCED MASONRY UNITS

A. General:

1. Masonry construction shall conform to the International Building Code and as supplemented by these Specifications. Do not start laying masonry units if the foundation horizontal or vertical alignment does not satisfy the tolerance specification specified in Section 03 30 00, CONCRETE.

2. The maximum permissible variation from plumb of the wall or of a line of joints in the wall shall be 1/16-inch per foot of height, and ¼-inch in the total height of the wall. The maximum permissible variation from a horizontal line along the base of the wall or for lines of horizontal joints shall be 1/16-inch per block, ¼-inch per 50 feet of wall with proportionately greater tolerance for longer walls up to ½-inch in the total length of wall. Interior surfaces shall be maintained in the plane described above and the dimension tolerances of the units shall be taken up on exterior surfaces.

3. Units with chipped edges or corners within permissible ASTM limits shall be placed in the wall such that the chipped area is not exposed to view.

B. Wall Units:

1. General:

a. If it is necessary to move a unit after it has been once set in place, the unit shall be removed from the wall, cleaned, and set in fresh mortar.
b. Toothing of masonry units will not be permitted unless approval is given by the Engineer.
c. All masonry work shall be protected from damage until final acceptance of the work. Damaged units will not be accepted.

2. Running Bond: Unless otherwise shown, walls shall be laid up in straight, uniform courses using a running bond pattern. The running bond pattern shall guarantee continuous vertical cells meeting the requirements of this Specification with mortar joints as required to prevent the different materials such as grout or poured insulation from escaping from the cell being filled to adjacent cells where the material is not intended to be placed.

C. Special Shapes: Provide and place such special units as corner block, door jamb block, lintel block fillers, and similar blocks as may be required. Use the required shapes and sizes to work to corners and openings maintaining a proper bond throughout the wall.

3.05 BUILT-IN ITEMS

A. Door frames, windows, vents, louvers, and other items required to be built in the wall shall be in position, plumb and level, and the wall constructed around them. Standard masonry anchors shall be used to secure the items to the wall. All spaces around the items shall be filled with mortar or grout, and additional reinforcing shall be provided as shown on the Drawings.

3.06 EMBEDDED CONDUITS

A. Electrical, instrumentation, or water conduits shall not be placed in a cell containing reinforcement unless approved by the Engineer. Core drilling or field cutting for new openings in masonry walls for miscellaneous smaller conduits shall only be done after the Engineer has approved the proposed size and location.

3.07 MORTAR PREPARATION

A. Mortar shall be mixed by placing ½ the water and aggregate in the operating mixer. Add cement. Add the remaining aggregate and water and mix for at least 2 minutes. Add lime and continue mixing as long as needed to secure a uniform mass, but not less than 3 minutes after the addition of lime.

B. The mortar shall be machine mixed in approved mixers. Mixer drums shall be kept clean and free of debris and dried mortar. The mortar shall be in

place before the initial setting of the cement has taken place. Re-tempering of mortar in which the cement has started to set will not be permitted.

3.08 MORTAR JOINTS

A. General:

1. Mortar joints shall be straight, clean, and shall have a uniform thickness of 3/8-inch.

2. The horizontal and vertical mortar joints shall have full mortar coverage on the face shells.

3. Vertical head joints shall be buttered well on each unit for a width equal to the face shell of the unit, and these joints shall be shoved tightly so that the mortar bonds well to both units. Joints shall be solidly filled from the face of the block to at least the depth of the face shell.

4. All excess mortar shall be removed from the grout space of the cells to be filled as the units are being laid. Excess mortar shall not be allowed to build up in the grout space of any units to be filled with grout.

B. Exposed Joints:

1. Joints that will be exposed to view after final construction shall be tooled unless otherwise noted or shown. Joints shall be cut flush and, as mortar takes its initial set, shall be tooled to provide a concave joint. Tooling shall be done when the mortar is partially set but still sufficiently plastic to bond. All tooling shall be done with a tool which compacts the mortar, pressing the excess mortar out rather than dragging it out. Joints which are not tight at the time of tooling shall be raked out, pointed, and then tooled.

2. Joints at split face surfaces, interior and exterior, shall be raked and tooled.

C. Concealed Joints: Joints that are not exposed shall be struck flush with no further treatment required.

3.09 CONTROL AND EXPANSION JOINTS

A. General: Install control and expansion joints in unit masonry where indicated on the Drawings. Build-in related items as masonry progresses. Do not form a continuous span through movement joints unless provisions are made to prevent in-plane restraint of wall or partition movement.

B. Form control joints in concrete masonry by one of the following methods

1. Fit bond-breaker strips into hollow contour in ends of concrete masonry units on one side of control joint. Fill resultant core with grout and rake joints in exposed faces.

2. Install preformed control-joint gaskets designed to fit standard sash block.

3. Install interlocking units designed for control joints. Install bond-breaker strips at joint. Keep head joints free and clear of mortar or rake joint.

4. Install temporary foam-plastic filler in head joints and remove filler when unit masonry is complete.

5. Form open joint of width indicated, but not less than 3/8-inch for installation of sealant and backer rod specified in Section 07 90 00, CAULKING AND SEALANTS. Keep joint free and clear of mortar.

3.10 REINFORCING

A. General: Reinforcing bars shall be lapped 48 bar-diameters minimum where spliced and shall be wire-tied together. All bars shall have a minimum clearance of 1 bar-diameter from the masonry and from additional parallel bars in the same grout space. All vertical bars in walls shall be centered in the wall thickness.

B. Foundation Dowels:

1. The size, number, and location of the foundation dowels shall match the vertical wall reinforcing unless otherwise noted.

2. When a foundation dowel does not line up as intended, with a vertical core, it shall not be sloped more than 1 horizontal to 12 vertical to bring it into alignment.

C. Vertical Reinforcing: Vertical reinforcing steel shall be held in position near the ends of the bars by wire ties to dowels and/or by reinforcing positioners. The bars shall be held in position at intervals not exceeding 80 bar-diameters by reinforcing positioners.

D. Horizontal Reinforcing: Horizontal bars shall be laid on the webs of bond beam units, and shall be placed as the wall is built.

E. Horizontal Joint Reinforcing: Joint reinforcing shall be installed as shown on drawings with vertical spacing not exceeding 16 inches. Lap joint reinforcing, 8 inches minimum.

3.11 GROUTING

A. Grout Preparation: Grout shall be plant proportioned and transit-mixed. Transit-mixed grout shall meet the requirements of ASTM C94 and ASTM C476.

B. General Requirements:

1. Grout shall not be mixed, conveyed, or placed with equipment constructed of aluminum.

2. All vertical and horizontal reinforcement, ties, bolts, anchors, and other required embedments shall be secured in place, inspected, and approved before grouting starts.

3. Grouting of beams over openings shall be done in one continuous operation.

4. Vertical cells to be filled shall have vertical alignment sufficient to maintain a clear, unobstructed, continuous vertical cell measuring not less than 2-inch by 3-inch.

5. Grout shall be poured as soon as possible after the mortar has cured to reduce shrinkage cracking of the vertical joints. However, do not pour grout until the mortar has cured sufficiently to preclude displacement of, or other damage to, masonry units. If grout blowouts or flowouts, masonry misalignment, or cracking of masonry face shells occurs, Contractor shall tear down the wall and rebuild.

6. Immediately after the grouting has been completed, the scum and stains on the masonry shall be washed off using clean water and fiber brushes. Grout and mortar stains shall not be allowed to dry on the face of the exposed masonry.

7. Vertical reinforcement may be placed initially and the wall built up around it providing the reinforcing steel is first wire tied to the foundation dowels. Reinforcing positioners and/or approved cross bracing must be provided to secure the top of the steel in place. The vertical steel will not be permitted to be dropped in after the block is laid unless reinforcing positioners are provided in the course above the previously grouted course.

C. Grouting Requirements:

1. Solid Grouting Requirements: Walls which are to be solid grouted shall have vertical grout barriers spaced not more than 30 feet apart, which extend the full height of the wall.

2. Partial Grouting Requirements:

   a. Walls which do not require solid grouting shall have all cells containing reinforcing steel, anchor bolts, anchors, and others as shown, filled with grout.
   b. Cells to be filled shall be constructed to confine the grout within the cell. Tops of unfilled vertical cells under a bond beam shall be covered with metal lath or other approved grout dam to confine the grout fill to the bond beam section.
   c. Grout pours shall be limited in height to mid-depth of the course above the horizontal bond beam, except at the top course.

D. Low-Lift Grouting Requirements:

1. Unless otherwise approved by the Engineer prior to the start of the masonry work, all grouting shall be low-lift grouting, not to exceed 48 inches vertical height.

2. When grouting is stopped for 1 hour or longer, horizontal construction joints shall be formed by stopping the pour of grout ½-inch below the top of the uppermost unit. Horizontal steel shall be fully embedded by grout in an uninterrupted pour.

3. Grout pour shall be limited to a maximum height of 4 feet. The wall shall not be constructed more than one course above the top of the grout pour prior to placing the grout.

4. The grout shall be thoroughly consolidated with an internal "pencil" type vibrator to consolidate and reduce the amount of air voids. After waiting sufficient time to permit the grout to become plastic, but before it has taken any set, the grout shall be reconsolidated. The waiting period will vary depending upon weather conditions and block absorption rates, but under "normal" weather conditions with average masonry units, the waiting period should be between 30 to 60 minutes.

3.12 CLEANING

A. Clean all surfaces of excess mortar, grout spillage, dirt and other foreign substances.

B. Walls shall be cleaned such that there are no visible stains. Surfaces requiring painting or sealing shall be prepared in accordance with Section 09 90 00, PAINTING and per the paint manufacturer's instructions for masonry surface preparation.

3.13 PROTECTION

A. At the end of each day's work, tops of walls shall be covered with waterproof sheeting or by other means that will protect the walls from becoming excessively wet. Extend cover 24-inches minimum down both sides and secure in place to protect against wind removal or tearing.

3.14 TEMPORARY BRACING AND SHORING

A. The Contractor shall adequately brace and shore all walls until the walls and roof are completed. Contractor shall also provide adequate shoring and bracing for all lintels. Bracing and shoring shall be sufficient to protect the walls against damage from the elements, including wind and snow. Do not remove bracing and shoring in less than 10 days after construction is completed.

3.15 TESTING AND SPECIAL INSPECTIONS

A. The Owner shall retain an independent Special Inspector for Special Inspection and Testing in accordance with IBC 2021 and as follows:

1. Masonry construction shall be inspected and evaluated in accordance with IBC 2021 and as also shown on the Drawings.

2. The following verification shall be performed during construction for each 5000 square feet of wall area or portion thereof:

a. Mortar Verification: ASTM C270 or evaluated in accordance with ASTM C780.
b. Mortar Composition and Properties: Conform to ASTM C270 and shall conform to the proportion specifications of IBC 2021
c. Grout: Conforms to ASTM C476 and tested in accordance with ASTM C1019. Verify slump flow and Visual Stability Index when self-consolidating grout is delivered to site in accordance with ASTM C1611.
d. Unit Strength Method: For each type of wall construction indicated, masonry units will be verified for F’m per IBC 2021 and TMS 602-16.
e. Concrete Masonry Units: Conform to ASTM C90 and are tested in accordance with ASTM C140.

3. Submit two copies of all tests and inspection or verification reports to the Engineer within 24 hours of testing.

3.16 CAULKING

A. Caulking shall be applied around perimeter of doors, windows, louvers, and other items penetrating the wall to ensure a thoroughly weather-tight installation. Caulking compound shall be applied with a suitable caulking gun, forcing out air and completely filling groves. Exposed surfaces of compound shall be finished neatly with a trowel or other suitable tool, free of wrinkles and uniformly smooth. Also see Section 07 90 00, CAULKING AND SEALANTS.

3.17 PAINTING

A. If called for on the Drawings, painting of interior and exterior above grade walls shall be performed in accordance with Section 09 90 00, PAINTING. Exterior walls with an exterior brick veneer cover do not require painting. Colors shall be as shown on the Drawings, or as selected by the Owner and Engineer from Shop Drawing submittals.

END OF SECTION 04 23 00

PART 1 GENERAL

1.01 WORK INCLUDED

A. This section includes work necessary to furnish and install, complete, structural steel.

1.02 GENERAL REQUIREMENTS

A. Like items of materials provided hereunder shall be the end products of one manufacturer to achieve standardization for appearance, maintenance, and replacement.

B. See CONDITIONS OF THE CONTRACT and Division 01 00 00, GENERAL REQUIREMENTS which contain information and requirements that apply to the work specified herein and are mandatory for this project.

1.03 RELATED WORK SPECIFIED IN OTHER SECTIONS

A. Section 01 40 00, QUALITY CONTROL for independent testing agency procedures and administrative requirements.

B. Section 03 30 00, CONCRETE for non-shrink grout and other concrete work.

C. Section 05 50 00, MISCELLANEOUS METAL ITEMS for loose steel bearing and embedded plates, anchor bolts, and miscellaneous steel framing.

D. Section 09 90 00, PAINTING for surface preparation and priming requirements.

1.04 SUBMITTALS

A. General: Submit each item in this section according to the Conditions of the Contract and Section 01 33 00, SUBMITTALS.

B. Product data for each type of product specified including name and address of manufacturer(s), product specifications, manufacturer's testing procedures and standards, and preparation and installation instructions.

C. Shop drawings detailing fabrication of structural steel components in compliance with AISC recommendations and specifications referenced herein:

1. Details showing members and their connections with all necessary information such as dimensions, anchor bolt layouts, etc.

2. Include details of cuts, connections, splices, camber, holes, and other pertinent data.

3. Indicate welds by standard AWS symbols, distinguishing between shop and field welds, and show size, length, and type of each weld.

4. Indicate type, size, and length of bolts, distinguishing between shop and field bolts. Identify high strength bolted slip critical, direct tension, or tensioned shear/bearing connections.

D. Qualification data for firms and persons specified in the "Quality Assurance" Article hereinafter to demonstrate their capabilities and experience. Include lists of completed projects with project names and addresses, names and addresses of engineers, architects, and owners, and other information specified.

E. Mill test reports signed by manufacturers certifying that their products, including the following, comply with requirements:

1. Structural steel, including chemical and physical properties.

2. Bolts, nuts, and washers, including mechanical properties and chemical analysis.

3. Shop primers.

4. Non-shrink grout.

5. Direct-tension indicators.

6. Shear stud connectors.

F. Submit results and reports for all Contractor provided quality control testing.

1.05 QUALITY ASSURANCE

A. Installer Qualifications: Engage an experienced installer with a minimum of 10 years experience, who has completed structural steel work similar in material, design, and extent to that indicated for this project and with a record of successful in-service performance.

B. Fabricator Qualifications: Engage a firm experienced in fabricating structural steel similar to that indicated for this Project and with a record of successful in-service performance, as well as sufficient production capacity to fabricate structural steel without delaying the work.

1. Fabricator must participate in the AISC Quality Certification Program and be designated an AISC - Certified Plant as follows:

   a. Category: Category 1, conventional steel structures.
   b. Fabricator shall be registered with and approved by authorities having jurisdiction.
   c. As an alternate to Category 1 certifications, other fabricators will be allowed providing they can demonstrate a minimum of 10 years experience fabricating similar steel structures.

C. Comply with applicable provisions of the following specifications and documents:

1. AISC's "Specification for Structural Steel Buildings--Allowable Stress Design and Plastic Design".

2. AISC's "Load and Resistance Factor Design (LFRD) Specification for Structural Steel Buildings".

3. AISC's "Specification for Allowable Stress Design of Single-Angle Members".

4. AISC's "Specification for Load and Resistance Factor Design of Single-Angle Members".

5. AISC's "Code of Standard Practice for Structural Steel Buildings and Bridges".

6. ASTM A6 "Specification for General Requirements for Rolled Steel Plates, Shapes, Sheet Piling, and Bars for Structural Use".

7. Research Council on Structural Connections' (RCSC) "Specification for Structural Joints Using ASTM A325 or A490 Bolts".

8. Other ASTM standards as referenced herein.

D. Welding Standards: Comply with applicable provisions of AWS D1.1 "Structural Welding Code—Steel", latest edition. Present evidence that each welder has satisfactorily passed AWS qualification tests for welding processes involved and, if pertinent, has undergone recertification.

E. Field Quality Control Testing and Special Inspection(s): The Contractor shall provide the services of an independent Special Inspector certified by the appropriate jurisdiction to perform the types of field quality control tests and inspections specified. Field quality control testing and Special Inspection requirements shall be as specified hereinafter in Part 3,

EXECUTION. Costs of field quality control testing and Special Inspections shall be borne by the Contractor.

PART 2 PRODUCTS

2.01 MATERIALS

A. Structural Wide Flange (W-shapes) and WT-shapes Sections: ASTM A992.

B. Structural M-shapes or S-shapes Sections: ASTM A36.

C. Angles, Channels, Plates, Bars and Other Structural Steel Shapes (as indicated on the Drawings): ASTM A36. Dual 36 ksi / 50 ksi; certified grade is acceptable.

D. Cold-Formed Structural Steel Tubing: ASTM A500, Grade B.

E. Hot-Formed Structural Steel Tubing: ASTM A501.

F. Structural Steel Pipe: ASTM A53, Type E or S, Grade B.

1. Weight Class: STD, or as indicated on the Drawings.

2. Finish: Black, except where indicated to be galvanized.

G. Shear Connectors: ASTM A108, Grade 1015 through 1020, headed-stud type, cold-finished carbon steel, AWS D1.1, Type B.

H. Anchor Rods, Bolts, Nuts, and Washers:

1. Unheaded and Threaded Rods: ASTM A36.

2. Hooked, headed, and Threaded Rods: ASTM F1554, Grade 36.

3. Headed Bolts: ASTM A307, Grade A (ASTM F568, Property Class 4.6); carbon-steel, hex-head bolts; and carbon-steel nuts.

4. Washers: ASTM A36.

5. Finish: Mechanically deposited zinc-coating, ASTM B695, Class 55.

I. Non-high Strength Bolts, Nuts, and Washers: ASTM A307, Grade A (ASTM F568, Property Class 4.6); carbon-steel, hex-head bolts; carbon-steel nuts; and flat, unhardened steel washers.

1. Finish: Mechanically deposited zinc-coating, ASTM B695, Class 55.

2. Bolt Length: As required with unhardened washers.

J. High-Strength Bolts, Nuts, and Washers: ASTM A325, Type 1, heavy hex steel structural bolts, heavy hex carbon-steel nuts, and hardened carbon-steel washers.

1. Finish: Mechanically deposited zinc-coating, ASTM B695, Class 55.

2. Bolt Length: As required with hardened washers and load indicator washers.

3. Hardened Washers: ASTM F436, match bolt type and finish.

K. Welding Electrodes: Use E70XX electrodes. Comply with AWS D1.1 requirements.

L. Direct Tension Indicators (Load Indicator Washers): ASTM F959, Type 325.

1. Finish: Mechanically deposited zinc-coating, ASTM B695, Class 55.

2. Provide at all connections using high strength bolts for testing of high strength bolt connections.

M. Welded Anchor Studs: Provide headed concrete anchor studs (HAS), or deformed bar anchors (DBA), or threaded anchor studs (TAS), as shown on the Drawings.

N. Non-shrink Grout: Non-shrink, non-metallic type as specified in Section 03 30 00, CONCRETE.

2.02 SHOP PRIMER MATERIAL

A. Primer: Anti-corrosive epoxy primer or fabricator's standard lead- and chromate-free, non-asphaltic, rust-inhibiting primer, depending on specific area where steel is to be located. Compatible with specified painting system in Section 09 90 00, PAINTING.

2.03 SHOP FABRICATION

A. Fabricate and assemble structural steel in shop to greatest extent possible. Fabricate structural steel according to AISC specifications referenced in this section and in approved shop drawings.

1. Camber structural steel members where indicated.

1. Identify high-strength structural steel according to ASTM A6 and maintain markings until steel has been erected.

2. Mark and match-mark materials for field assembly.

3. Fabricate for delivery a sequence that will expedite erection and minimize field handling of structural steel.

4. Complete structural steel assemblies, including welding of units, before starting shop-priming operations.

5. Comply with fabrication tolerance limits of AISC's "Code of Standard Practice for Steel Buildings and Bridges" for structural steel.

B. Thermal Cutting: Perform thermal cutting by machine to greatest extent possible. Plane thermally cut edges to be welded.

C. Finishing: Accurately mill ends of columns and other members transmitting loads in bearing.

D. Shear Connectors: Prepare steel surfaces as recommended by manufacturer of shear connectors. Use automatic end welding of headed-stud shear connectors according to AWS D1.1 and manufacturer's printed instructions.

E. Holes: Provide holes required for securing other work to structural steel framing and for passage of other work through steel framing members, as shown on shop drawings. Cut, drill, or punch holes perpendicular to metal surfaces. Do not flame-cut holes or enlarge holes by burning. Drill holes in bearing plates.

F. Weld threaded nuts to framing and other specialty items as indicated to receive other work.

2.04 SHOP CONNECTIONS

A. Shop install and tighten non-high strength bolts, except where high strength bolts are indicated.

B. Shop install and tighten high strength bolts according to RCSC's "Specification for Structural Joints Using ASTM A325 or A490 Bolts."

1. Bolts: ASTM A325 high strength bolts, unless otherwise indicated.

2. Connection Type: Snug tightened, unless noted as slip critical. Use special indicator washer location requirements of ASTM F959 at all bolt locations.

3. Provide hardened washers. Install under turned element (bolt head or nut) and between turned element and indicator washer protrusions.

C. Weld Connections: Comply with AWS D1.1 for procedures, appearance and quality of welds, and methods used in correcting welding work. Verify that weld sizes, fabrication sequence, and equipment used for architecturally exposed structural steel will limit distortions to allowable tolerances. Prevent surface bleeding of back-side welding on exposed steel surfaces. Grind smooth exposed fillet welds ½-inch and larger. Grind flush butt welds. Dress exposed welds.

2.05 HOT DIP GALVANIZING

A. Steel members to be hot dip galvanized after fabrication shall be as shown on the Drawings, per ASTM A123. All structural steel fasteners shall be galvanized in accordance with ASTM A695, Class 55 minimum.

2.06 SHOP PRIMING

A. Shop prime steel surfaces as specified in Section 09 90 00, PAINTING, except the following:

1. Surfaces embedded in concrete or mortar. Extend priming of partially embedded members to a depth of 2 inches.

2. Surfaces to be field welded.

3. Galvanized surfaces.

B. Surface Preparation: Clean surfaces to be painted. Remove loose rust, loose mill scale, and spatter, slag, or flux deposits. Prepare surfaces according to SSPC specifications per SSPC-SP 3 "Power Tool Cleaning."

C. Priming: Immediately after surface preparation, apply primer according to manufacturer's instructions and at rate recommended by SSPC to provide a dry film thickness of not less than 1.5 mils, or as specified in Section 09 90 00, PAINTING, whichever is greater. Use priming methods that result in full coverage of joints, corners, edges, and exposed surfaces. Apply two coats of shop paint to inaccessible surfaces after assembly or erection. Change color of second coat to distinguish it from first.

2.07 SOURCE QUALITY CONTROL

A. Correct deficiencies in or remove and replace structural steel that inspections and test reports indicate do not comply with specified requirements.

B. Additional testing, at Contractor's expense, will be performed to determine compliance of corrected work with specified requirements.

C. Shop-bolted connections will be tested and inspected according to RCSC's "Specification for Structural Joints Using ASTM A325 or A490 Bolts." Direct-tension indicator gaps will be verified to comply with ASTM F959, Table 2.

D. In addition to visual inspection, shop-welded connections will be inspected and tested according to AWS D1.1 and the inspection procedures listed below, at testing agency's option:

1. Liquid Penetrant Inspection: ASTM E165.

2. Magnetic Particle Inspection: ASTM E709; performed on root pass and on finished weld. Cracks or zones of incomplete fusion or penetration will not be accepted.

3. Ultrasonic Inspection: ASTM E164.

E. In addition to visual inspection, shop-welded shear connectors will be inspected and tested according to requirements of AWS D1.1 for stud welding and as follows:

1. Bend tests will be performed when visual inspections reveal either less than a continuous 360 degree flash or welding repairs to any shear connector.

2. Tests will be conducted on additional shear connectors when weld fracture occurs on shear connectors already tested, according to requirements of AWS D1.1.

PART 3 EXECUTION

3.01 DELIVERY, STORAGE, AND HANDLING

A. Deliver structural steel to project site in such quantities and at such times to ensure continuity of installation. Load and unload structural members in a manner such that they will be transported and moved without being excessively stressed, deformed, or otherwise damaged.

B. Store materials to permit easy access for inspection and identification. Keep steel members off ground in a dry area by using pallets, platforms, or other supports. Protect steel members and packaged materials from erosion and deterioration. Handle all materials to avoid distortion or damage to members or supporting structures.

1. Store fasteners in a protected place. Clean and re-lubricate bolts and nuts that become dry or rusty before use.

2. Do not store materials on structure in a manner that might cause distortion or damage to members or supporting structures. Repair or replace damaged materials or structures as directed.

3.02 SEQUENCING

A. Supply anchorage items to be embedded in or attached to other construction without delaying the work. Provide setting diagrams, templates, instructions, and directions, as required, for installation.

3.03 EXAMINATION

A. Before erection proceeds, and with the steel erector present, verify elevations of concrete and masonry bearing surfaces and locations of anchorages for compliance with requirements.

B. Do not proceed with erection until unsatisfactory conditions have been corrected.

3.04 PREPARATION

A. Furnish templates for installation of anchor rods, anchor bolts, and other embedments in concrete and masonry work.

B. Provide temporary shores, guys, braces, and other supports during erection to keep structural steel secure, plumb, and in alignment against temporary construction loads and loads equal in intensity to design loads. Remove temporary supports when permanent structural steel, connections, and bracing are in place, unless otherwise indicated. Do not remove temporary shoring supporting composite deck construction until cast-in-place concrete has attained its design compressive strength.

C. Where applicable, coordinate with temporary shoring requirements in Division 03 00 00, CONCRETE.

3.05 ERECTION

A. Set structural steel accurately in locations and to elevations indicated and according to AISC specifications referenced in this Section.

B. Anchor Bolts and Rods: Install anchor bolts and other connectors required for securing structural steel to in-place work. Provide templates and other devices for pre-setting bolts and other anchors to accurate locations.

C. Base and Bearing Plates: Clean concrete and masonry bearing surfaces of bond-reducing materials and roughen surfaces prior to setting base and bearing plates. Clean bottom surface of base and bearing plates.

1. Set base and bearing plates for structural members on wedges, shims, or setting nuts as required.

2. Snug tighten anchor bolts after supported members have been positioned and plumbed. Do not remove wedges or shims but, if protruding, cut off flush with edge of base or bearing plate prior to packing with grout.

3. Pack grout solidly between bearing surfaces and plates so no voids remain, as also specified in Section 03 30 00, CONCRETE. Finish exposed surfaces, protect installed materials, and allow to cure. Comply with manufacturer's instructions for proprietary grout materials and curing.

4. Tighten anchor bolts after grout has cured for a minimum of 3 days.

D. Maintain erection tolerances of structural steel within AISC's "Code of Standard Practice for Steel Buildings and Bridges."

E. Align and adjust various members forming part of complete frame or structure before permanently fastening. Before assembly, clean bearing surfaces and other surfaces that will be in permanent contact. Perform necessary adjustments to compensate for minor discrepancies in elevations and alignment.

1. Level and plumb individual members of structure. Set structural members accurately to lines and elevations shown.

2. Establish required leveling and plumbing measurements on mean operating temperature of structure. Make allowances for difference between temperature at time of erection and mean temperature at which structure will be when completed and in service.

F. Splice members only where indicated.

G. Remove erection bolts on welded, architecturally exposed structural steel; fill holes with plug welds; and grind smooth at exposed surfaces.

H. Do not use thermal or gas cutting during erection in the field.

I. Do not enlarge unfair holes in members by burning or by using drift pins. Ream holes that must be enlarged to admit bolts.

J. All field welding shall be done in accordance with AWS D1.1. Provide AWS D1.1 qualified welders, welding operators, and tackers. Grind exposed welds smooth. Removal of temporary welds is only required from finished, exposed areas.

K. Repair damage to galvanized coatings using ASTM A780 zinc rich paint for galvanizing damaged by handling, transporting, cutting, welding, or bolting. Do not heat surfaces to which repair paint has been applied.

3.06 FIELD CONNECTIONS

A. Install and tighten non-high strength bolts, except where high strength bolts are indicated. Tighten bolts to a snug tight fit where the plies in a joint are in firm contact.

B. Install and tighten high strength bolts according to RCSC's "Specification for Structural Joints Using ASTM A325 or A490 Bolts."

1. Washers: Provide direct tension indicator washers on all high strength bolt locations. Where possible, install washer under the bolt head and tighten the nut. If the washer must be installed adjacent to the turned element, provide a flat washer between the direct tension indicator washer and the nut when the nut is turned for tightening.

2. Connection Type: Initially snug tightened, unless indicated as slip critical. After initial tightening procedure, fully tension bolts progressing from the most rigid part of a connection to the free edges.

C. Weld Connections: Comply with AWS D1.1 for procedures, appearance and quality of welds, and methods used in correcting welding work. Comply with AISC specifications referenced in this Section for bearing, adequacy of temporary connections, alignment, and removal of paint on surfaces adjacent to field welds.

3.07 FIELD PAINTING

A. Touchup: Immediately after erection, clean field welds, bolted connections, and abraded areas of slag or shop paint primer. Apply touchup paint primer by brush or spray of same thickness and material as that used in shop application.

B. Finish Coats: As indicated on the Drawings and/or as specified in Section 09 90 00, PAINTING.

3.08 FIELD QUALITY CONTROL TESTING AND SPECIAL INSPECTIONS

A. The Contractor shall engage an independent testing and inspecting agency to perform field inspections, quality control tests, Special Inspections, and to prepare test reports. Testing agency will conduct and interpret tests and state in each report whether tested work complies with or deviates from requirements.

B. Correct deficiencies in or remove and replace structural steel that inspections and test reports indicate do not comply with specified requirements.

C. Additional testing, at Contractor's expense, will be performed to determine compliance of corrected work with specified requirements.

D. Field-bolted connections will be tested and inspected according to RCSC's "Specification for Structural Joints Using ASTM A325 or A490 Bolts." Direct-tension indicator gaps will be verified to comply with ASTM F959, Table 2.

E. In addition to visual inspection, field-welded connections will be inspected and tested according to AWS D1.1 and the inspection procedures listed below, at testing agency's option:

1. Liquid Penetrant Inspection: ASTM E165.

2. Magnetic Particle Inspection: ASTM E709; performed on root pass and on finished weld. Cracks or zones of incomplete fusion or penetration will not be accepted.

3. Ultrasonic Inspection: ASTM E164.

F. In addition to visual inspection, field-welded shear connectors will be inspected and tested according to requirements of AWS D1.1 for stud welding and as follows:

1. Bend tests will be performed when visual inspections reveal either less than a continuous 360 degree flash or welding repairs to any shear connector.

2. Tests will be conducted on additional shear connectors when weld fracture occurs on shear connectors already tested, according to requirements of AWS D1.1.

G. Special Inspection shall be in accordance with the 2021 International Building Code for items as shown on the Drawings.

END OF SECTION 05 12 00

PART 1 GENERAL

1.01 WORK INCLUDED

A. This section includes work necessary to furnish and install, complete, structural aluminum, including the fabrication and erection of framing and bracing members and connections.

1.02 GENERAL REQUIREMENTS

A. Like items of materials provided hereunder shall be the end products of one manufacturer in order to achieve standardization for appearance, maintenance, and replacement.

B. See CONDITIONS OF THE CONTRACT and Division 01 00 00, GENERAL REQUIREMENTS which contain information and requirements that apply to the work specified herein and are mandatory for this project.

1.03 RELATED WORK SPECIFIED IN OTHER SECTIONS

A. Section 01 40 00, QUALITY CONTROL for independent testing agency procedures and administrative requirements.

B. Section 03 30 00, CONCRETE for non-shrink grout and other related concrete work.

C. Section 05 50 00, MISCELLANEOUS METAL ITEMS for anchor bolts and miscellaneous fabricated aluminum items.

D. Section 09 90 00, PAINTING for aluminum and dis-similar metals protection.

1.04 QUALITY ASSURANCE

A. Reference Standards:

1. Aluminum Association (AA):

   a. ADM 1, The Aluminum Design Manual.
   b. DAF-45, Designation System for Aluminum Finishes.

2. American Institute of Steel Construction (AISC):

   a. Manual of Steel Construction.

3. ASTM International (ASTM):

a. B209, Standard Specification for Aluminum and Aluminum-Alloy Sheet and Plate.
b. B221, Standard Specification for Aluminum and Aluminum-Alloy Extruded Bars, Rods, Wire, Profiles, and Tubes.
c. B247, Standard Specification for Aluminum and Aluminum-Alloy Die Forgings, Hand Forgings, and Rolled Ring Forgings.
d. B308, Standard Specification for Aluminum-Alloy 6061-T6 Standard Structural Profiles.
e. B429, Standard Specification for Aluminum-Alloy Extruded Structural Pipe and Tube.
f. F467, Standard Specification for Nonferrous Nuts for General Use.
g. F468, Standard Specification for Nonferrous Bolts, Hex Cap Screws, and Studs for General Use.
h. F593, Standard Specification for Stainless Steel Bolts, Hex Cap Screws, and Studs.
i. Other ASTM standards as referenced herein.

4. American Welding Society (AWS):

a. D1.2, Structural Welding Code – Aluminum.

B. Qualifications for Welding Aluminum: Qualify welding procedures and welding operators in accordance with AWS D1.2; welding operators shall have been qualified during the 12-month period prior to commencement of welding.

1.05 SUBMITTALS

A. General: Submit each item in this section according to the Conditions of the Contract and Section 01 33 00, SUBMITTALS.

B. Product data for each type of product specified including name and address of manufacturer(s), product specifications, manufacturer's testing procedures and standards, certificates of compliance with standards specified for all major components and fasteners incorporated into work, and preparation and installation instructions.

C. Shop drawings detailing fabrication of structural aluminum components in compliance with AISC recommendations and specifications referenced herein:

1. Details showing members and their connections with all necessary information such as dimensions, anchor bolt layouts, etc.

2. Include details of cuts, connections, splices, camber, holes, and other pertinent data.

3. Indicate welds by standard AWS symbols, distinguishing between shop and field welds, and show size, length, and type of each weld.

4. Indicate type, size, and length of bolts, distinguishing between shop and field bolts.

5. Complete shop drawings for all of the work showing clearly all pieces, details, connections, materials, and shop-applied coatings.

6. Prepare complete erection drawings showing the location and marks of all pieces.

D. Qualification data for firms and persons specified in the "Quality Assurance" Article hereinbefore to demonstrate their capabilities and experience. Include lists of completed projects with project names and addresses, names and addresses of engineers, architects, and owners, and other information specified. Also provide copies of current welding certificates for each welder assigned to perform welding indicating compliance with testing specified by AWS.

E. Mill test reports signed by manufacturers certifying that their products, including the following, comply with requirements:

1. Structural aluminum, including chemical and physical properties.

PART 2 PRODUCTS

2.01 ALUMINUM MATERIALS

A. Alloy 6061-T6; 32,000 psi tensile yield strength minimum:

1. ASTM B209 for sheets and plates.

2. ASTM B210 for tubes.

3. ASTM B221 and ASTM B308 for shapes including beams, channels, angles, and tees.

4. ASTM B247 for forgings.

B. Alloy 6063-T5 or T6; 15,000 psi tensile yield strength minimum:

1. ASTM B211 and ASTM B221 for bars, rods, wires, and tubes.

C. Aluminum Bolts and Nuts: ASTM F467 and ASTM F468 of Alloy 2024-T4 (62,000 psi tensile strength minimum). Washers shall be of the same

material and alloy as found in bolts and nuts with which the washers are to be used.

D. Bolts and Nuts for fastening aluminum to structural steel: Stainless steel complying with ASTM F593, Type 316 with a minimum yield strength of 30,000 psi and a minimum tensile strength of 75,000 psi. Washers shall be of the same material and alloy as found in bolts and nuts with which the washers are to be used.

E. Electrodes for Welding Aluminum: AWS D1.2 filler Alloy 5356.

F. Expansion Anchor Bolts and Adhesive Anchor Bolts for Fastening to Concrete: Stainless steel as specified in Section 05 50 00, MISCELLANEOUS METAL ITEMS.

2.02 DESIGN CRITERIA

A. Where final design of members and connection for any portion of structure is not indicated, perform final design of such members and connections.

B. Final designs of members and connections shall conform to AA ADM 1 and to details and requirements shown on Drawings.

2.03 FABRICATION

A. Fabrication of bolted and welded connections of aluminum work shall be in accordance with AA ADM 1.

B. Contractor shall be solely responsible for correctness of all shop and field fabrication and fit, and shall verify field conditions and dimensions prior to fabrication.

C. Fabricate aluminum work and assemble in shop to greatest extent possible, make splices only where indicated or approved.

D. Provide connections as indicated on the Drawings. Where not indicated, design and provide connections in accordance with requirements of this Section. One-sided or other types of eccentric connections are not acceptable unless indicated on the Drawings or approved on shop drawings.

E. Drill or punch holes at right angles to surface of metal. Do not make or enlarge holes by burning. Provide holes clean and free of torn or ragged edges. Use tools which will make a 1/16-inch bevel to remove outside burrs resulting from drilling or punching operations.

1. Punch or drill for field connections and for attachment of work by other trades

F. Cope at 45 degrees corners of stiffener plates at junction of member flanges with webs.

G. Welding: Weld connections to members in shop and bolt connections in field. Perform welding using electrodes of filler Alloy 5356, perform welding in accordance with AWS D1.2, use only welding procedures and welding operators qualified in accordance with requirements of Article “Quality Assurance” hereinbefore.

H. Form to shapes indicated with straight lines, true angles, and smooth curves. Grind smooth all rough welds and sharp edges. Round all corners to approximately 1/8-inch radius.

I. Finish shall be anodized as follows:

1. Architectural Class I coating per AA DAF-45: Clear anodized AA-M10C22A41 or AA-M12C22A41.

PART 3 EXECUTION

3.01 DELIVERY, STORAGE, AND HANDLING

A. Deliver structural aluminum to project site in such quantities and at such times to ensure continuity of installation. Load and unload structural members in a manner such that they will be transported and moved without being excessively stressed, deformed, or otherwise damaged.

B. Store materials to permit easy access for inspection and identification. Keep aluminum members off ground in a dry area by using pallets, platforms, or other supports. Protect aluminum members and packaged materials from erosion and deterioration. Handle all materials to avoid distortion or damage to members or supporting structures.

1. Store fasteners in a protected place. Clean and re-lubricate bolts and nuts that become dry or rusty before use.

2. Do not store materials on structure in a manner that might cause distortion or damage to members or supporting structures. Repair or replace damaged materials or structures as directed.

3.02 SEQUENCING

A. Supply anchorage items to be embedded in or attached to other construction without delaying the work. Provide setting diagrams, templates, instructions, and directions, as required, for installation.

3.03 EXAMINATION

A. Before erection proceeds, verify elevations of concrete and masonry bearing surfaces and locations of anchorages for compliance with requirements.

B. Do not proceed with erection until unsatisfactory conditions have been corrected.

3.04 PREPARATION

A. Furnish templates for installation of anchor rods, anchor bolts, and other embedments in concrete and masonry work.

B. Provide temporary shores, guys, braces, and other supports during erection to keep structural aluminum secure, plumb, and in alignment against temporary construction loads and loads equal in intensity to design loads. Remove temporary supports when permanent structural members, connections, and bracing are in place, unless otherwise indicated. Do not remove temporary shoring supporting concrete construction until cast-in-place concrete has attained its design compressive strength.

C. Where applicable, coordinate temporary shoring requirements with Division 03 00 00, CONCRETE.

3.05 ERECTION

A. Contractor shall be solely responsible for safety. Construction means and methods and sequencing of work shall be the responsibility and prerogative of the Contractor. Contractor shall take into consideration that full structural capacity of many structural members is not realized until structural assembly is complete; e.g. until decks and diagonal bracing or rigid connections are installed:

1. Partially complete structural members shall not be loaded without an investigation by the Contractor

2. Until all elements of the permanent structure and lateral bracing system are complete, provide temporary bracing designed, finished, and installed by the Contractor

B. Bolting:

1. Protect bolt threads from damage.

2. Rest bolt heads and nuts squarely against surfaces.

3. Where bolt heads or nuts rest on beveled surfaces having slope greater than 1 in 20 with planes normal to bolt axis, provide beveled washers to give full bearing to head and nut.

4. Correct poor matching of holes by drilling next larger size and using larger diameter bolt.

5. Unless shown otherwise on the Drawings, connect aluminum members to:

   a. Aluminum members using ¾-inch diameter aluminum bolts of Alloy 2024-T4.
   b. Structural steel using ¾-inch diameter stainless steel bolts.
   c. Concrete or masonry using stainless steel expansion anchor bolts or adhesive anchor bolts as specified in Section 05 50 00, MISCELLANEOUS METAL ITEMS.
   d. Provide dissimilar materials protection as specified hereinafter.

C. Welding: Field welding of aluminum is not allowed unless indicated on the Drawings.

D. Correct fabrication errors and damaged members in shop; do not use a cutting torch in shop or in field to cut any members, to correct fabrication errors, or to cut openings.

E. Provide templates for anchors, bolts, and other items to be installed in other work.

F. Field Assembly: Tolerances shall comply with the latest edition of AISC "Manual of Steel Construction". Before members are assembled, thoroughly clean all bearing surfaces and surfaces that will be in permanent contact. After assembly, carefully align all members of each frame or assembly and accurately adjust until final, correct, and true location is achieved. As work progresses, securely fasten in place:

1. Provide full length members without splices.

2. Securely tighten and leave in place all erection bolts used in welded construction, unless removal is required.

G. Set beam and column base plates accurately, as indicated on the Drawings with non-shrink grout, in accordance with Section 03 30 00, CONCRETE:

1. If not indicated otherwise, provide minimum of 1-inch grout thickness under base plates.

2. Set and anchor each base plate to proper line and elevation:

   a. Use aluminum wedges, shims, or setting nuts for leveling and plumbing columns and beams, and then tighten anchor bolts.
   b. Fill space between bearing surface and bottom of base plate with non-shrink grout, fill space until voids are completely filled and base plates are fully bedded on wedges, shims, and grout.
   c. Do not remove wedges or shims and where they protrude, cut off flush with edge of base plate.

H. Temporary Protection: Suitably protect aluminum surfaces against lime mortar stains, discoloration, surface abrasion and other construction abuses. Remove protection prior to installation.

I. Contact with Dissimilar Materials: Where aluminum surfaces will be embedded in concrete, built into masonry, or in contact with steel (stainless or carbon), concrete, or masonry, or other dissimilar materials, coat the aluminum surfaces in accordance with System No. 27 in Section 09 90 00, PAINTING. Where aluminum surfaces will be bolted with stainless or carbon steel bolts, provide mylar, polyethylene, or Engineer approved isolation sleeves and washers.

END OF SECTION 05 14 00

PART 1 GENERAL

1.01 WORK INCLUDED

A. This section includes the work necessary to furnish and install, complete, fabricated metalwork and castings as shown or as required to secure various parts together and provide a complete installation.

1.02 GENERAL

A. Like items of materials provided hereunder shall be the end products of one manufacturer to achieve standardization for appearance, maintenance, and replacement.

B. See CONDITIONS OF THE CONTRACT and Division 01 00 00, GENERAL REQUIREMENTS, which contain information and requirements that apply to the work specified herein and are mandatory for this project.

1.03 SUBMITTALS

A. Submittals shall be made in accordance with Section 01 33 00, SUBMITTALS. In addition, the following specific information shall be provided.

1. Shop drawings, including calculations where required, showing the details of fabrication and installation for miscellaneous metalwork.

2. Product data for wedge, expansion, and epoxy adhesive anchors. Furnish International Conference of Building Officials (ICBO) or other similar building code organizations' recommendations regarding safe allowable design loads.

1.04 REFERENCE STANDARDS

A. AWS D1.1 "Structural Welding Code-Steel", AWS D1.2 "Structural Welding Code-Aluminum", AWS D1.6 "Structural Welding Code-Stainless Steel", American Welding Society.

B. "Book of Fastener Standards," Industrial Fastener Institute.

C. "Standards and Specifications" of the American Institute of Steel Construction.

D. "Codes and Industry Standards" of the Aluminum Association current Aluminum Design Manual series.

E. Other standards as referenced herein.

1.05 DELIVERY, STORAGE, AND HANDLING

A. Preparation for Shipment:

1. Insofar as practical, factory assemble items specified herein.

2. Package and clearly tag parts and assemblies that are of necessity shipped unassembled, in a manner that will protect materials from damage, and facilitate identification and field assembly.

B. General Storage and Handling: Accept metal fabrications on-site in labeled shipments and inspect for damage. Protect metal fabrications from damage on-site by exposure to weather or by ground contact, deformation, and other types of damage.

C. Storage of Epoxy Adhesive:

1. Store epoxy cartridges on pallets or shelving in a covered storage area.

2. Control temperature above 60 degrees F and dispose of cartridges if shelf life has expired. If stored at temperatures below 60 degrees F, test adhesive prior to use to determine if adhesive meets specified requirements.

1.06 GENERAL FABRICATION

A. Fabrication shall be coordinated with connecting work.

B. The fabrication shall be done in units as large as practicable for finishing, handling and installation. Fabricate items with joints tightly fitted and secured.

C. All welding shall conform to the requirements of the American Welding Society.

D. Connections:

1. Shop connections shall be welded after removing all scale, and ground smooth.

2. Field connections shall be bolted, unless otherwise specified or detailed.

3. Punch or drill holes shall not be cut with a torch.

4. Joints exposed to weather shall be formed so as not to trap water.

5. Butt joints shall use the mill square end and be smoothed.

6. Corners shall use a cope and weld technique.

PART 2 PRODUCTS

2.01 GENERAL

A. Like items of materials provided hereunder shall be the end products of one manufacturer to achieve standardization for appearance, maintenance, and replacement.

B. Where applicable, the structure and appurtenant facilities have been designed around the first named manufacturer's equipment. Metalwork and castings furnished by all qualified interested manufacturers will be considered, provided that necessary structural, electrical, and mechanical changes required are submitted in conformance with the requirements of CONDITIONS OF THE CONTRACT and Division 01 00 00, GENERAL REQUIREMENTS. The Contractor shall bear all costs for necessary changes for a complete and satisfactory installation.

C. Furnish miscellaneous items:

1. Miscellaneous metalwork and castings as shown, or as required to secure various parts together and provide a complete installation.

2. Items specified herein are not intended to be all inclusive. Provide metalwork and castings shown, specified, or which can reasonably be inferred as necessary to complete the project.

D. Unless otherwise indicated, materials shall meet the latest issue of ASTM Specifications as follows:

Item	ASTM Specification
Steel Shapes, Channels, Angles, and Plates:	A36, A992 for “W” and “WT” shapes/sections
Steel Pipe Columns:	A501 or A53, Type E or S, Grade B
Structural Steel Tubing:	A500, Grade B
Sheet Steel	A653, Grade 33 structural quality
Stainless Steel:	
Bars and Shapes:	A276, Type 316

Steel Plate, Sheet and Strip:	A240, Type 316
Bolts:	A193, Type 316, B8MN, B8M2 or B8M3
Nuts:	A194, Type 316, B8MN, B8M2 or B8M3
Aluminum, Structural Shapes and Plates:	Alloy 6061-T6, meeting referenced specifications and ASTM sections found in Aluminum Association current Construction Manual Series
Connection Bolts for Steel Members: Use Compressible Washer Type Direct Tension Indicators at all Connections; Use Hardened Washers also Under Head and Nut:	A325-F, F959, F436 (washers)
Anchor Bolts and Nuts:	
Carbon Steel:	A307-A and A563
Stainless Steel:	A193, Type 316
Galvanized Steel Bolts and Nuts:	A153, Zinc Coating for A307 and A563
Flat Washers (Unhardened)	F844, Use A153 for Zinc Coating
Threaded Bars:	A36
Connection Bolts for Wood Members:	
Dry Environment:	A307-A or B Uncoated
Wet Use or Exterior Use:	A307-A or B with A153 Galvanizing
Connection Bolts for:	
Aluminum:	Alloy 2024-T4; or use appropriate Stainless Steel
Cast Iron:	A48, Class 30

2.02 ANCHOR BOLTS

A. Anchor bolts for equipment and machinery, where permanently anchored into concrete (non-submerged use), shall be stainless steel unless otherwise shown. The diameter, length, and any bend dimensions shall be as required by the equipment or machinery manufacturer. Unless otherwise required, use 3/4-inch minimum diameter and other geometry shown on the

Drawings. Furnish a minimum of two nuts and a washer of the same material for each bolt. Provide sleeves as required or as shown for location adjustment.

B. Anchor bolts for equipment, as hereinafter defined, machinery or other connections that are to be for submerged use shall be as specified for non-submerged use except that the bolts shall be Type 316 stainless steel. Coating of anchor bolt threads is not required. Where threads are covered with fusion bonded coating, provide nut of proper size to fit and provide connection of equal strength to embedded bolt.

C. Submerged use is defined as any connection to concrete from a point 1 foot 6-inches above the maximum water surface in any water holding structures and any connections below that point.

D. Anchor bolts for other uses to anchor fabricated metal work or structural building components, or structural frame components shall be Type 316 stainless steel. Minimum size shall be 3/4-inch diameter by 12-inches long, unless otherwise shown. Furnish two nuts and one washer per bolt of the same material as the bolt, unless otherwise shown.

2.03 STAINLESS STEEL FASTENERS LUBRICANT (ANTI-SEIZING)

A. Where stainless steel nuts and machined bolts, anchor bolts, concrete anchors, and all other threaded fasteners are used, Contractor shall apply an anti-seizing lubricant to the threads prior to making up the connections. The lubricant shall contain substantial amounts of molybdenum disulfide, graphite, mica, talic, or copper, such as Loctite anti-seize lubricant as manufactured by Henkel Corporation; Permatex anti-seize lubricant; or equal.

2.04 POST INSTALLED ANCHORING SYSTEMS FOR CONCRETE

A. Wedge Anchors:

1. Wedge anchors shall be 100 percent 316 stainless steel and shall not be used below a point of 1-foot 6-inches above the peak (maximum) water surface in water holding structures. See epoxy adhesive anchors or coated anchor bolts specified elsewhere in this Specification.

2. Wedge anchors shall be Type 316 stainless steel, manufactured by ITW Red Head Trubolt; Hilti Kwik-Bolt, KB-TZ, manufactured by Hilti, Inc.; or equal. Furnish sizes shown on Drawings.

B. Expansion Anchors:

1. Expansion anchors shall not be used except in dry areas where future corrosion is not a problem. In wet or damp areas, provide wedge anchors as specified hereinbefore, or in submerged conditions, epoxy adhesive anchors as specified hereinafter.

2. Self-drilling anchors, snap-off type or flush type. Provide anchors for use with hot-dipped galvanized bolts. Non-drilling anchors shall be flush type for use with a bolt or stud type with projecting threaded stud. Multi-Set II Drop-in as manufactured by ITW Red Head; Hilti HDI+ Drop-In Anchors as manufactured by Hilti, Inc.; or equal.

C. Epoxy Adhesive Anchors:

1. Provide for anchoring metal components at or below a point 1-foot 6-inches above maximum water surface elevation in water holding structures, in buried in earth conditions, and in very wet or humid locations.

2. Anchor rod shall be Type 316 stainless steel threaded rod free of grease, oil, or other deleterious material with a 45-degree chisel point. Where indicated, use typical reinforcing where attaching to existing concrete.

3. Epoxy Adhesive:

a. Meet ASTM C881, Type I, Grade 3, Class A, B, or C.
b. Two-component, 100 percent solids, non-sag, paste, insensitive to moisture, designed to be used in adverse freeze/thaw environments and gray in color.
c. Cure Temperature, Pot Life, and Workability: Compatible for intended use and environmental conditions.

4. Mixed Epoxy Adhesive:

a. Non-sag paste consistency with ability to remain in a 1-inch diameter overhead drilled hole without runout, holding the following properties:

1) Slant Shear Strength, ASTM C881 and C882, No Failure in Bond Line, Dry/Moist Conditions: 5,000 psi.
2) Compressive Strength, ASTM D695: 13,000 psi minimum.
3) Tensile Strength, ASTM D638: 6,500 psi.
4) Heat Deflection Temperature, ASTM D648: 135 degrees F, minimum.

5. Epoxy Adhesive Packaging:

   a. Disposable, self-contained cartridge system capable of dispensing both epoxy components in the proper mixing ratio, and fit into a manually or pneumatically operated caulking gun.
   b. Dispense components through a mixing nozzle that thoroughly mixes components and places epoxy at base of predrilled hole.
   c. Mixing Nozzles: Disposable, manufactured in several sizes to accommodate sizes of anchor rods.
   d. Cartridge Markings: Include manufacturer's name, mix ratio by volume, product expiration date, and appropriate ANSI handling precautions.

6. Manufacturers:

   a. Hilti Inc., Hybrid HIT-RE 500 V3 Adhesive Anchoring System.
   b. ITW Red Head, Epcon C6+ Epoxy Anchor System.
   c. Adhesives Technolgy Corporation, Ultrabond HS-1CC Epoxy.
   d. Or equal.

2.05 MISCELLANEOUS STRUCTURAL STEEL SUPPORTS AND PIPING SUPPORTS

A. Provide all structural steel supports and miscellaneous piping system supports of the sizes and weights shown. All connections shall be welded, unless otherwise shown. All steel shall be painted, unless shown otherwise on the Drawings.

B. Provide Series 300 stainless steel where indicated on the Drawings.

2.06 BOLTS AND FASTENERS

A. Bolts and fasteners not permanently embedded in concrete shall be Type 316 stainless steel as hereinbefore specified.

B. Bolts for flanges of piping, valves, and other similar connections shall be Type 316 stainless steel.

2.07 PIPE SLEEVES

A. See Section 40 05 10, PIPING - GENERAL.

2.08 ALUMINUM ITEMS

A. General: Aluminum 6061 and 6063 alloy extruded bar, rod, shapes, type and wire shall conform to the latest edition of Federal Specification QQ-A-200 and ASTM B221. Aluminum 6061 alloy seamless drawn tubing shall conform to the latest edition of Federal Specification WW-T-700 and ASTM B210. Aluminum finish shall be anodized and conform to American Architectural Manufacturers Association (AAAMA) A41, prepared with M or C pretreatment.

B. Anchor Bolts, Nuts and Washers: Aluminum anchor bolts, nuts and washers shall conform to the applicable requirements of the Aluminum Association Aluminum Design Manual and Specifications for Aluminum Structures. Where anchor bolts are embedded into the concrete, use Type 316 stainless steel bolts as specified hereinbefore.

2.09 LOOSE LINTELS AND ANGLE FRAMING

A. Provide all steel lintels and framing required for the support of masonry and other construction not attached to structural steel framing or where not specified elsewhere. Hot dip galvanize after fabrication.

2.10 MANHOLE FRAMES AND COVERS

A. As specified in Section 33 05 61, POLYMER CONCRETE MANHOLES.

2.11 NEOPRENE GASKET

A. ASTM D1056-2A1-E, soft, closed-cell, neoprene gasket material, suitable for exposure to sewage and sewage gases, unless otherwise shown.

1. Furnish without skin coat on either side.

2. Thickness: As shown or minimum ¼-inch.

3. Provide sufficient gasket material for sealing penetrations through headworks channel grating and around the screen enclosures.

B. Provide minimum 1 gallon of manufacturer's recommended adhesive.

C. Manufacturer:

1. Rubatex Division of Great American Industries, Rubatex No. R-4261-N.

2. Equivalent by Atlantic Gasket Corporation.

3. Or equal.

2.12 LADDERS AND SAFETY CAGES

A. Fabricate aluminum ladders with rails and rod rungs as shown on the Drawings and as follows:

1. Punch rails, pass rungs through rails, and weld on outside.

2. Weld brackets to the ladder for fastening ladder to wall.

3. Ladder shall meet applicable requirements of OSHA, State Basic Safety Code, or other regulatory authority.

4. Ladders shall comply with ANSI A14.3.

B. Fabricate steel roof access ladders to comply with ANSI A14.3 and the following:

1. Siderails: Continuous, 1/2-inch by 2-inch steel bars, spaced 16 inches apart.

2. Bar Rungs: 1-inch diameter steel bars, spaced 12 inches on center, maximum.

3. Fit rungs in centerline of siderails, plug weld, and grind smooth.

4. Support ladders at top and bottom and at 4 feet on center with welded or bolted steel brackets sized to hold centerline of ladder rungs clear of the wall surface by not less than 6 inches.

5. Hot dip galvanize after fabrication.

C. Ladder Safety Cage:

1. Fabricate of aluminum bar sections, minimum ¼-inch by 2-inch size.

2. Bottom hoop shall be 18-inch radius size, located maximum 72 inches above finished floor or roof. Other hoops shall be 14-inch radius size, spaced a maximum of 48 inches on center.

3. Vertical bars spacing shall be 10 inches on center.

4. Finish of safety cage shall match ladder finish.

2.13 ALUMINUM INCIDENTAL TRAFFIC LOAD ACCESS COVERS WITH FALL PROTECTION GRATING

A. Provide traffic load access covers in dimensions and with single or double leaf doors and with or without safety grating as shown on the Drawings.

B. Hatch shall be rated to 16,000 lbs plust 30% impact over 10” x 20” contact area (not in driving lane). Channel frame and bearing plate shall be cast into and supported by concrete designed for H-20 loads.

C. Acceptable manufacturers include East Jordan; Bilco Company; Babcock Davis; or equal.

D. Component Fabrication:

1. Conform to OSHA Standard 1910.23.

2. Access Door Leaf(s): 6061-T6 aluminum for reinforcing bars, angles and extrusions; 5086 aluminum for 1/4-inch diamond plate. Welding shall be in accordance with ANSI/ASW D1.2.

3. Channel Frame: Extruded aluminum with continuous 1/4-inch anchor flange around perimeter and built-in neoprene or silicone cushion gasket.

4. Hinges shall be of cast stainless steel and bolted to the angle frame and diamond plate.

5. Equip doors shall be equipped with heavy duty stainless steel pneumatic spring designed for ease of maintenance. Spring shall retard downward motion of door leaves.

6. Equip doors with cast stainless steel hold-open arm with positive locking device with conveniently positioned release handle for easy and controlled closing. Doors shall automatically lock open in the 90-degree position.

7. Provide cast aluminum fall-protection grating. Grating shall be painted orange or red and shall open in the same direction as the hatch doors. Fall protection grating may provide structural support to the diamond plate doors.

8. Provide 1½-inch drainage coupling in the corner of channel frame. Coordinate routing of drain with Engineer.

9. Provide stainless steel slam lock mounted on bottom of leaf with removable topside handle and socket recessed in cover and provided with threaded plug for flush surface with handle removed.

10. Provide cast stainless steel lift handle flush with top of diamond plate.

11. Hardware: Type 316 stainless steel.

E. Aluminum Finish: Mill finish with Tufcoat 3.5PR applied to surfaces in contact with concrete and stainless steel.

F. Where shown on the Drawings, furnish with ladder safety post as specified hereinbefore.

G. Furnish manufacturer guarantee against defects in materials and workmanship for a period of at least 5 years.

2.14 WIRE MESH SCREENS

A. Fabricate wire mesh screens and frames of materials and sizes shown, in accordance with details on the Drawings. Mesh shall be woven stainless steel, stretched taut over frame before bolts are tightened down.

2.15 CHECKERED PLATE

A. Aluminum: Alloy 6061-T6, tread plate, 3/8-inch minimum thickness, unless indicated otherwise on the Drawings. Fasten all accessories by welding or stainless steel bolts or screws as shown.

B. Provide aluminum angle stiffeners as shown on the Drawings or as required by the plate manufacturer to meet project conditions, same material as plate.

C. Where shown, provide heavy duty hinges for plate openings, minimum 3/16-thickness, Type 316 stainless steel construction.

D. Where shown, provide special fabricated aluminum walk-over pipe or conduit protectors.

2.16 MISCELLANEOUS FABRICATED METALS

A. The following additional items are listed as a guide. Some items on the list may not be required, and list may not be all-inclusive. Submittal data for materials and products must be approved before they are incorporated in the work.

1. Vents with screens.

2. Pipe supports, hangers, and/or sway braces.

3. Steel bases and anchors.

4. Guard posts (pipe bollards), fabricated from Schedule 40 steel pipe and prime painted after fabrication.

5. Float switch, probes, and level element mounting hardware.

6. Aluminum or steel stairway members.

7. Lifting eyes.

2.17 SHOP PAINTING

A. Clean ferrous metal items not galvanized and apply shop coat of metal primer per Section 09 90 00, PAINTING.

PART 3 EXECUTION

3.01 FABRICATION AND GENERAL WORKMANSHIP

A. Workmanship and finish of all metalwork specified under this section shall be the highest grade and equal to the best practice of modern shops for the respective work and shall meet the requirements for “Architecturally Exposed Steel” as defined by the American Institute of Steel Construction (AISC). Exposed surfaces shall have smooth finish and sharp, well-defined lines. Provide all necessary rabbets, lugs, and brackets so that the work can be assembled in a neat, substantial manner. Conceal fastenings where practical. Drill metalwork and countersink holes as required for attaching hardware or other materials. Fabricate with materials as specified. Weld connections, except where bolting is directed. Items requiring special fabrication methods are mentioned herein. Fabrication of all other items shall be of equal quality. Methods of fabrication not otherwise specified or shown shall be adequate for the stresses and as directed by the Engineer.

B. Grind all exposed edges of welds smooth. All sharp edges shall be rounded to a 1/8-inch minimum radius; all burrs, jagged edges, and surface defects shall be ground smooth.

C. Welds and adjacent areas shall be prepared such that there is (1) no undercutting or reverse ridges on the weld bead, (2) no weld spatter on or adjacent to the weld or any other area to be painted, and (3) no sharp peaks or ridges along the weld bead. All embedded pieces of electrode or wire shall be ground flush with the adjacent surface of the weld bead.

D. Aluminum: Fabricate aluminum as shown, and in accordance with the Aluminum Association Standards and the manufacturer's recommendations as approved. Grind smooth sheared edges exposed in the finished work.

3.02 WELDING

A. The technique of welding employed, appearance, quality of welds made, and the methods of correcting defective work shall conform to codes for Arc and Gas Welding in Building Construction of the AWS and AISC. Surfaces to be welded shall be free from loose scale, rust, grease, paint, and other foreign material, except that mill scale which will withstand vigorous wire brushing may remain. A light film of linseed oil may likewise be disregarded. No welding shall be done when the temperature of the base metal is lower than zero degrees F. Finished members shall be true to line and free from twists.

B. Prepare welds and adjacent areas such that there is no undercutting or reverse ridges on the weld bead, no weld spatter on or adjacent to the weld or any other area to be painted, and no sharp peaks or ridges along the weld bead. Grind embedded pieces of electrode or wire flush with adjacent surface of weld bead.

C. Aluminum: Aluminum shall be welded with Gas Metal Arc (MIG) or Gas Tungsten Arc (TIG) processes in accordance with the manufacturer's recommendations as approved, and in accordance with the recommendations of the American Welding Society contained in the Welding Handbook, as last revised. Grind smooth all exposed aluminum welds.

3.03 EXAMINATION

A. Examine surfaces and structures to receive the work of this section. Do not proceed until unsuitable conditions have been corrected. Starting work constitutes acceptance of conditions as suitable to the proper execution of the work.

B. Take measurements at the site and fabricate work to suit. No changes will be made in the structure to accommodate this work.

3.04 DELIVERY, STORAGE AND HANDLING

A. Deliver, store, and handle equipment in a manner to prevent damage, deterioration and warping. Provide packaging such as cardboard or other containers, separators, banding, spreaders, and paper wrappings to protect all items.

B. The Contractor shall thoroughly inspect product upon receipt and report damaged material immediately to delivering carrier and note such damage on the carrier's freight bill of lading.

C. Store units in a protected dry area, at least 6 inches or more off the ground or floor and at least 1/4" between individual pieces. Follow special storage and handling requirements of manufacturer. Protect exposed finish surfaces of prefinished items.

3.05 GENERAL INSTALLATION

A. Comply with manufacturer's instructions and recommendations. Coordinate with installation of concrete floors or walls to receive accessory units. Where applicable, anchor units securely to supporting structural substrates, adequate to withstand lateral and thermal stresses, as well as inward and outward loading pressures.

B. Clean exposed metal surfaces according to manufacturer's instructions. Touch up damaged metal coatings.

C. Moving parts shall operate freely and shall not rattle or catch when moved.

3.06 INSTALLATION OF FABRICATED METALWORK

A. Install in accordance with the shop drawings, the Drawings and these Specifications. Perform field welding and erection work by skilled mechanics. Install fabricated metalwork plumb or level as applicable, accurately fitted, and free from distortions or defects. The completed installations shall, in all cases, be rigid, substantial, and neat in appearance. Erect structural steel in accordance with the applicable portions of AISC Code of Standard Practice, except as modified. Install commercially manufactured products in accordance with manufacturer's recommendations as approved.

B. Aluminum: Erection of aluminum shall be in accordance with the Aluminum Association. Mill markings shall not be removed from concealed surfaces. Exposed surfaces not otherwise coated shall have the inked or painted identification marks removed after the material has been inspected and approved by the Engineer.

C. Make provisions for erection stresses. Install temporary bracing to maintain alignment until permanent bracing and/or attachments are installed.

3.07 ANCHOR BOLTS

A. All anchor bolts shall be accurately located and held in place with templates at the time the concrete is poured.

3.08 POST INSTALLED CONCRETE ANCHORS

A. Installation shall not begin until the concrete or masonry receiving the anchors has attained its design strength. Anchor shall not be installed closer than six times its diameter to either an edge of the concrete or masonry, or to another anchor, unless specifically detailed otherwise on the Drawings. Install in strict conformance with manufacturers written instructions. Use manufacturer's recommended drills and equipment.

B. Do not install epoxy adhesive anchors when temperature of concrete is below 35 degrees F or above 110 degrees F.

3.09 STAINLESS STEEL FASTENERS LUBRICANT (ANTI-SEIZING)

A. Apply specified anti-seizing lubricant to threads prior to making up connections.

3.10 ACCESS COVERS

A. Accurately position access covers prior to placing concrete, such that covers are flush with floor surface.

B. Protect from damage resulting from concrete placement. Thoroughly clean exposed surfaces of concrete spillage to obtain a clean, uniform appearance.

C. Install covers in accordance with manufacturer's written instructions.

D. Doors shall operate to satisfaction of Engineer and Owner.

E. Coordinate installation of roof access hatches with installation of roof deck insulation system and other substrates to receive accessory units. Coordinate with vapor barriers, roof insulation, roofing and flashing installation to ensure that combined elements are waterproof and weathertight. Anchor units securely to supporting structural substrates, adequate to withstand lateral and thermal stresses, as well as inward and outward loading pressures.

1. Except as otherwise indicated, install roof accessory items according to construction details of NRCA “Roofing and Waterproofing Manual”.

2. Field finish paint roof hatches as specified hereinbefore.

F. Clean exposed metal according to manufacturer’s instructions. Touch up damaged metal coatings.

3.11 GALVANIZING AND REPAIR

A. Galvanizing of steel plates, shapes, bars (and products fabricated from these items), and strip 1/8-inch thick or thicker, shall conform to ASTM A123. Pipe, welded or seamless steel, shall conform to ASTM A53. Material thinner than 1/8-inch shall either be galvanized before fabrication in conformance with the requirements of ASTM A525, Coating Designation G 210; or after fabrication, in conformance with the requirements of ASTM A123, except that the weight of zinc coating shall average not less than 1.2 ounces per square foot of actual surface area with no individual specimen having a weight of less than 1.0 ounce per square foot. Unless otherwise provided, galvanizing shall be done before or after fabrication, for material which is thinner than 1/8-inch, at the option of the Contractor. Galvanizing will not be required for stainless steel, monel metal, and similar corrosion resistant parts.

B. All welded areas shall be thoroughly cleaned prior to galvanizing to remove all slag or other material that would interfere with the adherence of the zinc. When it is necessary to straighten any sections after galvanizing, such work shall be performed without damage to the zinc coating.

C. Fabrication shall include all operations such as shearing, cutting, punching, forming, drilling, milling, bending, welding, and riveting.

D. Components of bolted assemblies shall be galvanized separately before assembly.

E. The minimum pitch diameter of the threaded portion of all bolts, anchor bars, or studs shall conform to ANSI B1.1, having a Class 2A tolerance before galvanizing. After galvanizing, the pitch diameter of the nuts or other internally threaded parts may be tapped over ANSI B1.1, Class 2B tolerance, by the following maximum amounts:

3/8-inch through 9/16-inch	0.016-inch oversize
5/8-inch through 1-inch	0.023-inch oversize
1-1/8-inch and larger	0.033-inch oversize

F. Galvanized surfaces which are specifically to be painted shall be prepared in the field approximately 48 to 72 hours before painting in accordance with Section 09 90 00, PAINTING.

G. All edges of tightly contacting surfaces, where galvanized is required, shall be completely sealed by welding before galvanizing.

H. Galvanized surfaces that are abraded or damaged at any time after the application of the zinc coating shall be repaired by solvent cleaning the

damaged area (Steel Structures Painting Council SP 1) and hand or power tool (Steel Structures Painting Council SP 2 or SP 3) the damaged areas removing all loose and cracked coating; after which the cleaned areas shall be re-galvanized. Re-galvanize coatings 2 ounces or heavier with a suitable low-melting zinc base alloy per the recommendations of the American Hot Dip Galvanizers Association to the thickness and quality specified for the original zinc coating. Conform to ASTM A123, ASTM A153, or ASTM A767 as appropriate. Re-galvanize coatings less than 2 ounces in accordance with ASTM A780.

I. Paint should be applied to a cleaned surface. Abrasive blasting is required for inorganic zinc silicate.

3.12 ELECTROLYTIC PROTECTION

A. Where aluminum is in contact with dissimilar metals, or to be embedded in masonry or concrete, protect surfaces in accordance with Section 09 90 00, PAINTING. Allow paint to dry before installation of the material. Protect painted surfaces during installation; should coating become marred, prepare and touch up surface per paint manufacturer's instructions.

B. Where aluminum is to be bolted using stainless or carbon steel, provide mylar, polyethylene or Engineer approved isolation sleeves and washers.

C. Where titanium equipment is in contact with concrete, masonry, or dissimilar metals, provide full-face neoprene insulation gasket, 3/32-inch minimum thickness and 70 durometer hardness.

3.13 PAINTING

A. Thoroughly clean all ferrous metal items not galvanized and shop coat with an appropriate metal primer. Preparation of surfaces and application of primer shall be in accordance with the paint manufacturer's printed directions and recommendations as approved; and in accordance with Section 09 90 00, PAINTING, utilizing the appropriate painting system.

END OF SECTION 05 50 00

(This page intentionally left blank)

PART 1 GENERAL

1.01 WORK INCLUDED

A. This section covers the work necessary to furnish and install, complete, the rough carpentry work and construction, including:

1. Wood furring, grounds, cants, anchors, nailers, and blocking.

2. Wall, floor, and/or roof sheathing.

3. Floor, wall, and/or roof framing.

B. Related work specified in other sections:

1. Section 06 13 00, Metal Plate Connected Wood Trusses.

1.02 GENERAL REQUIREMENTS

A. See CONDITIONS OF THE CONTRACT and Division 01 00 00, GENERAL REQUIREMENTS, which contain information and requirements that apply to the work specified herein and are mandatory for this project.

1.03 DEFINITIONS

A. Exposed Framing: Framing not concealed by other construction.

B. Dimension Lumber: Lumber of 2 inches nominal or greater, but less than 5 inches nominal, in the least dimension.

C. Lumber grading agencies and the abbreviations used to reference them, include the following:

1. ALSC: American Lumber Standards Committee.

2. APA: American Plywood Association, The Engineered Wood Association.

3. AWI: Architectural Woodwork Institute.

4. AWC: American Wood Council.

5. AWPA: American Wood Protection Association.

6. DOC: United States Department of Commerce National Institute of Standards and Technology.

7. NLGA: National Lumber Grades Authority.

8. NELMA: Northeastern Lumber Manufacturer's Association.

9. NWWDA: National Wood Window and Door Association.

10. SPIB: Southern Pine Inspection Bureau.

11. WCLIB: West Coast Lumber Inspection Bureau.

12. WWPA: Western Wood Products Association.

1.04 SUBMITTALS DURING CONSTRUCTION

A. Submittals during construction shall be made in accordance with Section 01 33 00, SUBMITTALS in Division 01 00 00, GENERAL REQUIREMENTS.

B. Submit the following:

1. Product Data and Technical Data for engineered wood products, metal framing anchors, construction adhesives, and any other factory fabricated product. Indicate component materials and dimensions and include construction and application details.

2. Material certificates for dimension lumber specified to comply with minimum allowable unit stresses. Indicate species and grade selected for each use and design values approved by ALSC Board of Review.

3. Structural Composite Lumber: Submit Manufacturer's published structural data including span tables, marked to indicate which sizes and grades are being used; if structural composite lumber is being substituted for dimension lumber or timbers, submit grading agency structural tables marked for comparison.

1.05 QUALITY ASSURANCE

A. Lumber grading rules and wood species shall be in conformance with the latest editions of DOC Product Standard (PS) 1 "Structural Plywood", DOC PS 2 "Performance Standard for Wood Based Structural-Use Panels", DOC PS 20 "American Softwood Lumber Standard", and standards published by the American Wood Council. The wood members shall conform to these requirements and provide design values equal to those published in the latest edition of the "National Design Specification for Wood Construction", published by the American Wood Council.

PART 2 PRODUCTS

2.01 WOOD PRODUCT MATERIALS, GENERAL

A. Lumber: Comply with DOC PS 20 and with applicable grading rules of inspection agencies indicated. If no grading agency is indicated, provide lumber that complies with the applicable rules of any rules writing agency certified by the ALSC Board of Review. Provide lumber graded by an agency certified by the ALSC Board of Review to inspect and grade lumber under the rules indicated.

1. Factory mark each piece of lumber with grade stamp of grading agency.

2. Where nominal sizes are indicated, provide actual sizes required by DOC PS 20 for moisture content specified. Where actual sizes are indicated, they are minimum dressed sizes for dry lumber.

3. Provide dry lumber with 19 percent maximum moisture content at time of dressing for 2-inch nominal thickness or less, unless otherwise indicated.

4. Provide dressed lumber, surface four sides (S4S), nominal dimensions given, unless otherwise indicated on the Drawings.

5. Species:

   a. Structural Load Bearing: Hem-Fir No. 1 (Base Value f=975 psi) - 2x6 or larger. Douglas Fir-Larch No. 1- 2x6 or larger.
   b. Non-Load-Bearing Partitions: Provide Standard, Stud, or
   c. No. 2 grade and any of the following species, unless notes otherwise: Western Woods, WWPA; Douglas Fir-Larch, NLGA, WCLIB, or WWPA; Hem-Fir, NLGA, WCLIB, or WWPA.
   d. Lumber of other species or grades is acceptable provided structural and appearance characteristics are equivalent to or better than products specified.

B. Wood Sheathing and Panels: Comply with DOC PS 1 for plywood and DOC PS 2 for oriented strand board (OSB).

1. Factory mark panels to indicate compliance with applicable standard.

2. Thickness: As needed to comply with requirements specified, but not less than thickness shown on the Drawings.

2.02 ROOF AND WALL SHEATHING

A. Roof Sheathing: Plywood structural wood panel or oriented strand board (OSB).

1. Bond Classification: Exposure 1 sheathing, C-D Grade.

2. Span Rating: Not less than 40/20.

3. Nominal Thickness: Not less than 19/32 inch.

4. Size: 4 feet wide by 8 feet long.

5. Edges: Square.

2.03 WOOD PRESERVATIVE TREATED LUMBER

A. Wood Preservative Pressure Treated Materials: Comply with applicable requirements of AWPA U1 “Use Category System: User Specification for Treated Wood”, using waterborne ACQ or SBX preservative.

B. Preservative chemicals shall be acceptable to authorities having jurisdiction and containing no arsenic, chromium, or other agents classified as carcinogenic. Oil-based preservative materials are specifically prohibited. Use boron based SBX preservatives for above ground applications only.

C. Mark each treated item with treatment quality mark of an inspection agency approved by ALSC Board of Review.

D. Pressure treat aboveground items with preservatives to a minimum retention of 0.25 pounds per cubic foot. Pressure treat wood members in contact with ground or freshwater with preservatives to a minimum retention of 0.40 pounds per cubic foot. After treatment, kiln-dry lumber and plywood to a maximum moisture content of 19 and 15 percent, respectively. Do not use material that is warped or does not comply with requirements for untreated material.

E. Complete fabrication of treated items before treatment, where possible. If cut after treatment, apply field treatment complying with AWPA M4 “Standard for the Care of Preservative Treated Wood Products” to cut surfaces. Inspect each piece of lumber or plywood after drying and discard damaged or defective pieces.

F. Treat items indicated on the Drawings, and the following:

1. Wood cants, nailers, curbs, equipment support bases, blocking, stripping, and similar members in connection with roofing, flashing, vapor barriers, and waterproofing.

2. Wood sills, sleepers, blocking, furring, stripping, and similar concealed members in contact with masonry or concrete.

3. Wood framing and furring attached directly to the interior of below grade exterior masonry or concrete walls.

4. Wood framing members less than 18 inches above grade.

5. Wood floor plates installed over concrete slabs directly in contact with earth.

6. Nailers, edge strips, crickets, curbs, and cants for roof decks.

2.04 MISCELLANEOUS LUMBER

A. Dimension Lumber: Provide dimension lumber of grades indicated on the Drawings according to the ALSC National Grading Rule (NGR) provisions of the inspection agency indicated. If not indicated, provide S4S, Construction, or No. 2 grade lumber with 15 percent maximum moisture content of any species.

1. Douglas Fir-Larch; NLGA, WCLIB, or WWPA.

2. Hem-Fir; NLGA, WCLIB, or WWPA.

3. Western Woods; WWPA.

B. Miscellaneous Lumber: Provide miscellaneous lumber indicated, No. 2 grade or better lumber of any species, for support or attachment of other construction, including rooftop equipment curbs and support bases, cant strips, bucks, nailers, blocking, furring, grounds, and similar members.

C. For blocking not used for attachment of other construction, Utility, Stud, or No. 3 grade lumber of any species may be used provided that it is cut and selected to eliminate defects that will interfere with its attachment and purpose.

D. For blocking and nailers used for attachment of other construction, select and cut lumber to eliminate knots and other defects that will interfere with the attachment of other work.

E. Wood Based Structural Use Panels: Provide either all-veneer, mat-formed, or composite panels complying with DOC PS 2, unless otherwise indicated.

Provide plywood panels complying with DOC PS 1, A-D Grade, where plywood is indicated.

1. Trademark: Factory mark structural-use panels with APA trademark evidencing compliance with grade requirements.

2. Span Ratings: Provide panels with span ratings required to suit support spacing indicated.

3. Plywood Backing Panels: For mounting electrical, communications, telephone equipment, or other similar panels with electrical components, provide fire-retardant-treated plywood panels Grade, A-D, Exposure 1, flame spread index of 25 or less, smoke developed index of 450 or less, when tested with ASTM E84.

4. For furring strips used for installing plywood or hardboard paneling, select boards with no knots capable of producing bent-over nails and damage to paneling.

2.05 FASTENERS

A. General: Provide fasteners of size and type indicated on the Drawings that comply with the requirements specified in this Article for material and manufacture. Where rough carpentry is exposed to weather, for roof sheathing, in ground contact, used with pressure preservative treated wood, or in area of high relative humidity, provide fasteners with a hot-dip zinc coating per ASTM A153 or of Type 304 stainless steel.

B. Power-Driven Fasteners: ICC Evaluation Service Report ESR-1539.

C. Bolts: Steel bolts complying with ASTM A307, Grade A with ASTM A563 hex nuts and, unless indicated otherwise, flat washers.

D. Nails, Brads, and Staples: ASTM F1667 or ASTM F547, size and type best suited for purpose. For sheathing, length of nails must be sufficient to extend a minimum of 1-inch into supports. In general, if not shown otherwise, 8-penny or larger nails must be used for nailing through 1-inch thick lumber and for toe nailing through 2-inch lumber; 16-penny or larger nails must be used for nailing through 2-inch lumber.

E. Wood Screws: ASME B18.6.1.

F. Lag Bolts and Lag Screws: ASME B18.2.1.

G. Drywall Screws: Bugle head, hardened steel, power driven type, length three times thickness of sheathing.

H. Expansion Anchors: Anchor bolt and sleeve assembly of material indicated below with capability to sustain, without failure, a load equal to six times the load imposed when installed in unit masonry assemblies and equal to four times the load imposed when installed in concrete as determined by testing per ASTM E488 conducted by a qualified independent testing and inspection agency.

1. Material: Carbon steel components, zinc plated to comply with ASTM B633, Thickness Class Fe/Zn 8 (SC 2, Moderate).

2.06 METAL FRAMING ANCHORS

A. Available Manufacturers: Subject to compliance with requirements, provide products indicated on the Drawings or comparable products from other manufacturers:

1. Simpson Strong-Tie Company, Inc.

2. Or approved equal.

B. Allowable Design Loads: Provide products with allowable design loads, as published by the manufacturer, that meet or exceed those indicated on the Drawings of manufacturers listed. Manufacturers published values shall be determined from empirical data or by rational engineering analysis, and demonstrated by comprehensive testing performed by a qualified independent testing agency.

C. Galvanized Steel Sheet: Hot-dip, zinc-coated steel sheet complying with ASTM A653, G60 coating designation; structural, commercial, or lock-forming quality, as standard with manufacturer for type of anchor indicated. Use for interior locations where stainless steel is not indicated.

D. Rafter Tie-Downs (Hurricane or Seismic Ties): Bent strap tie for fastening rafters or roof trusses to wall studs below, 3-1/4-inch wide by minimum 18-gauge thickness. Tie shall fit over top of rafter or truss and fasten to both sides of rafter or truss, face of top plates, and side of stud below.

2.07 MISCELLANEOUS MATERIALS

A. Sill-Sealer Gaskets: Closed cell neoprene or polyethylene foam from continuous rolls, ¼-inch thick, selected from manufacturer's standard widths to suit width of sill members indicated.

B. Adhesives for Gluing Furring and Sleepers to Concrete or Masonry: Formulation complying with ASTM D3498 that is approved for use indicated by the adhesive manufacturer. Use adhesives that have a VOC content of

70 grams per liter or less when calculated according to 40 CFR 59, Subpart D (EPA Method 24).

C. Building Roof Underlayment Paper: Unperforated asphalt saturated felt. Comply with ASTM D226, Type I, No. 15.

D. Building Weather Barrier Paper: Exterior weather barrier paper shall prevent the accumulation of water as a water resistive barrier, minimize air leakage into or out of the building envelope as a continuous air barrier, and provide sufficient water vapor transmission to enable drying as a vapor permeable membrane. DuPont Tyvek CommercialWrap, or approved equal that is ASTM E2357 passed, Air Barrier Association of America (ABAA) evaluated as an air barrier assembly, water penetration resistance greater than a hydrostatic head of 7.7 feet, and a water vapor permeance of not less than 23 perms per ASTM E96 (procedure A); with flame-spread and smoke-developed indexes of less than 25 and 450, respectively when tested per ASTM E84; UV stabilized for 9 month exposure; and acceptable to authorities having jurisdiction. Weather barrier paper shall have a VOC content of 30 grams per liter or less.

PART 3 EXECUTION

3.01 MATERIAL DELIVERY, STORAGE, AND HANDLING

A. Defer delivery to site until installation or storage areas are complete or protected from wetness. Protect sheet material from breaking corners and damaging surfaces while unloading.

B. Place materials in these areas immediately upon delivery in area protected from weather and maintain relative humidity at 60 percent or less.

C. Store materials 6 inches minimum aboveground on framework or blocking; cover with protective waterproof covering and provide adequate air circulation or ventilation. Stack lumber flat with spacers between each bundle to provide air circulation. Provide air circulation around stacks and under coverings. Support stacked products in a manner to prevent deformation.

D. Do not store seasoned materials in wet or damp areas or portions of building(s).

E. Do not subject to extreme changes of temperature or humidity.

3.02 GENERAL INSTALLATION

A. Preparation: Condition woodwork to average prevailing humidity conditions in installation areas, and examine and complete work as required, including back priming and removal of packing, before installing.

B. Install woodwork to comply with AWI Woodwork Standards for the same grade specified above for type of woodwork involved. For framing, comply with the latest edition of AWC's "Wood Frame Construction Manual", unless indicated otherwise.

C. Use only skilled workers and the highest standards of the craft. Plan work in advance and perform in proper sequence to facilitate prompt and continuous progress of the work.

D. Lay out, cut, fit, and install all rough carpentry items. Anchor sufficiently to ensure rigidity and permanence and as noted on Drawings. Do not splice structural members between supports, unless otherwise indicated.

E. Set rough carpentry to required levels and lines, with members plumb, true to line, cut, and fitted. Fit rough carpentry to other construction; scribe and cope as required for accurate fit. Correlate location of furring, nailers, blocking, grounds, and similar supports to allow for attachment of other construction. Provide for installation and support of other work.

F. Securely attach rough carpentry work and sheathing to substrate by anchoring and fastening as indicated, complying with the following:

1. ICC Evaluation Service Report ESR-1539 for power driven fasteners.

2. Table 2304.10.1, "Fastening Schedule", in the latest edition of ICC's International Building Code.

G. Metal Framing Anchors: Install metal framing anchors to comply with manufacturer's written instructions.

H. Use common wire nails in dry locations, unless otherwise indicated. Use hot-dip galvanized or stainless-steel nails where rough carpentry is exposed to weather, in ground contact, used with preservative treated wood, or in an area of high relative humidity. Select fasteners of size that will not fully penetrate members where opposite side will be exposed to view or will receive finish materials. Make tight connections between all members. Install fasteners without splitting wood; do not countersink nail heads in unexposed locations, unless otherwise indicated.

I. For exposed work, arrange fasteners in straight rows parallel with edges of members, with fasteners evenly spaced, and with adjacent rows staggered. Comply with approved fastener patterns where applicable. Use finishing

nails, unless otherwise indicated. Countersink nail heads on exposed carpentry work and fill holes with wood filler.

J. Framing Standard: Comply with AWC's "National Design Specifications for Wood Construction", "Wood Frame Construction Manual", and "Special Design Provisions for Wind and Seismic" unless indicated otherwise.

K. Provide blocking and framing as indicated on the Drawings and as required to support facing materials, fixtures, specialty items, and trim.

L. Sort and select lumber so that natural characteristics will not interfere with installation or with fastening other materials to lumber. Do not use materials with defects that interfere with the function of member or pieces, or impair the quality of sheathing, that are too small to use with minimum number of joints or optimum joint arrangement.

M. Cut sheathing panels at penetrations, edges, and other obstructions of work; fit tightly against abutting construction, unless otherwise indicated.

N. Coordinate wall and roof sheathing installation with flashing and joint sealant installation so these materials are installed in sequence and manner that prevent exterior moisture from passing through completed assembly.

O. Do not bridge building expansion joints with sheathing; cut and space edges of panels to match spacing of structural support elements.

P. Coordinate sheathing installation with installation of materials installed over sheathing so sheathing is not exposed to precipitation or left exposed at end of the workday when rain or snow is forecast.

3.03 CONDITIONS OF SURFACES

A. Verify that surfaces to receive rough carpentry materials are prepared to exact grades and dimensions.

3.04 WOOD GROUND, SLEEPER, BLOCKING, SUPPORTS, AND NAILER INSTALLATION

A. Install where indicated and where required for screeding or attaching other work. Form to shapes indicated and cut as required for true line and level of attached work. Coordinate locations with other work involved.

B. Attach items to substrates to support applied loading. Recess bolts and nuts flush with surfaces, unless otherwise indicated. In walls, provide blocking attached to studs as backing and support for wall mounted items, unless item can be securely fastened to two or more studs or other method of support is explicitly indicated.

C. Provide permanent grounds of dressed, pressure preservative treated, key-beveled lumber not less than 1-1/2 inches wide and of a thickness required to bring face of ground to exact thickness of finish material. Remove temporary grounds when no longer required.

3.05 WOOD FURRING INSTALLATION

A. Install level and plumb with closure strips at edges and openings. Shim with wood as required for tolerance of finish work.

3.06 SHEATHING INSTALLATION

A. Roof Sheathing: Secure panels with long dimension perpendicular to framing members, with ends staggered and over firm bearing.

1. Nail to wood framing; staples are not permitted.

2. Screw to cold formed metal framing.

3. See the Drawings for nailing schedule and details. If not shown, see Article “Nailing Requirements” hereinafter.

4. Abut sheathing edges over centerline of supports. Space panels 1/8-inch apart at edges and ends. At long edges, use sheathing clips where joints occur between roof framing members.

5. Place water resistant building roofing felt horizontally over roof sheathing, weather lapping edges and ends.

B. Provide building roof felt and wall weather barrier paper on wood board sheathing for all exterior sheathing. Apply wall paper shingle fashion, horizontally, beginning at bottom of wall and lap edges and ends a minimum of 4 inches. Apply roof paper shingle fashion, horizontally, beginning at bottom of roof and lap edges a minimum of 2 inches and lap ends a minimum of 4 inches.

3.07 WOOD STRUCTURAL PANEL INSTALLATION

A. General: Comply with applicable recommendations in APA Form No. E30, “Engineered Wood Construction Guide”, for types of structural use panels and applications indicated.

B. Secure with screws to studs with edges over firm bearing; space fasteners at maximum 24 inches on center on all edges and into studs in field of board.

1. At fire-rated walls, install board over wall board indicated as part of the fire rated assembly.

2. Where boards are indicated as full floor-to-ceiling height, install with long edge of board parallel to studs.

3. Install adjacent boards without gaps.

3.08 NAILING REQUIREMENTS

A. Unless otherwise indicated on Drawings or in these Specifications, the number and size of nails connecting wood members shall be not less than that indicated on Table No. 2304.10.1 “Fastening Schedule” of the latest edition of the ICC International Building Code and with the recommended nailing schedule in Table 3.1 of the latest edition of AWC’s “Wood Frame Construction Manual”. Where there is a discrepancy, the more stringent standard shall apply.

3.09 PROTECTION

A. Protect wood that has been treated with inorganic boron (SBX) from weather. If, despite protection, inorganic boron treated wood becomes wet, apply EPA registered borate treatment. Apply borate solution by spraying to comply with EPA registered label.

B. Protect all rough carpentry from weather. Do not use any rough carpentry lumber or plywood that has been damaged by weather prior to incorporation into the work.

3.10 FIELD QUALITY CONTROL

A. Testing Agency: Owner may engage a qualified independent testing and inspection agency to inspect wood construction.

B. Correct deficiencies in the work that test reports and inspections indicate does not comply with the Drawings or specifications.

END OF SECTION 06 10 00

PART 1 GENERAL

1.01 WORK INCLUDED

A. This section includes all labor, equipment, materials to design, furnish, and install, complete, the wood roof trusses and metal truss accessories.

B. Related Sections include the following:

1. Section 06 10 00, ROUGH CARPENTRY for dimensional lumber, supplementary framing and bracing, roof sheathing and subflooring.

1.02 GENERAL

A. See Division 01 00 00, GENERAL REQUIREMENTS; Standard General Conditions of the Construction Contract; and Supplementary Conditions to the General Conditions; which contain information and requirements that apply to the work specified herein and are mandatory for this project.

1.03 DEFINITIONS

A. Metal Plate Connected Wood Trusses: Planar structural units consisting of metal-plate-connected members fabricated from dimension lumber and cut and assembled before delivery to the project site.

B. Lumber grading agencies, and the abbreviations used to reference them, include the following:

1. NLGA: National Lumber Grades Authority.

2. WCLIB: West Coast Lumber Inspection Bureau.

3. WWPA: Western Wood Products Association.

C. Refer to Section 06 10 00, ROUGH CARPENTRY for other definitions and applicable agencies.

1.04 PERFORMANCE REQUIREMENTS

A. Structural Performance: Design and provide metal-plate-connected wood trusses capable of withstanding design loads within limits and under conditions indicated.

1. Design loads: As indicated on the Drawings.

2. Maximum deflection under design loads:

a. Roof Trusses: Vertical deflection of 1/360 of span under snow and live loads. Vertical deflection of 1/240 of span under dead plus snow load.

1.05 SUBMITTALS

A. Submittals shall be made in accordance with Section 01 33 00, SUBMITTALS.

B. Product Data: Provide product data for metal plate connectors, metal truss accessories, and fasteners

C. Shop Drawings: Show fabrication and installation details for trusses.

1. Show location, pitch, span, camber, configuration, and spacing for each type of truss required.

2. Indicate sizes, stress grades, and species of lumber.

3. Indicate locations of permanent bracing required to prevent buckling of individual truss members due to design loads.

4. Indicate type, size, material, finish, design values, orientation, and location of metal connector plates.

5. Show splice details and bearing details. Include all details of all connections and anchorages needed to accommodate special conditions such as high winds, seismic restraint, etc.

6. For installed products indicated to comply with design loads, include structural analysis data signed and sealed by the qualified professional engineer responsible for their preparation.

D. Product Certificates: Provide certificates for metal plate connected wood trusses, stamped and signed by a registered engineer in the State of Arizona**.**

E. Qualification Data: Provide for metal plate manufacturer and fabricator.

F. Material Certificates: Provide certificates for dimension lumber specified to comply with minimum allowable unit stresses. Indicate species and grade selected for each use and design values approved by the ALSC Board of Review.

G. Research/Evaluation Reports: Provide applicable reports for the following, showing compliance with building code in effect for the Project:

1. Metal plate connectors.

2. Metal truss accessories.

1.06 QUALITY ASSURANCE

A. Metal Connector Plate Manufacturer Qualifications: A manufacturer that is a member of the Truss Plate Institute (TPI) and that complies with quality control procedures in TPI 1 “National Design Standard for Metal Plate Connected Wood Truss Construction” for manufacture of connector plates.

1. Manufacturer's responsibilities include providing professional engineering services needed to assume engineering responsibility.

2. Engineering Responsibility: Preparation of Shop Drawings and comprehensive engineering analysis by a qualified professional engineer.

B. Fabricator Qualifications: Shop that participates in a recognized quality assurance program that complies with quality control procedures in TPI 1 and that involves third-party inspection by an independent testing and inspecting agency acceptable to the Engineer and authorities having jurisdiction.

C. Source Limitations for Connector Plates: Obtain metal connector plates from a single manufacturer.

D. Comply with applicable requirements and recommendations of the following publications for design, fabrication, and installation of trusses:

1. TPI 1, National Design Standard for Metal Plate Connected Wood Truss Construction.

2. TPI DSB, Recommended Design Specification for Temporary Bracing of Metal Plate Connected Wood Trusses.

3. TPI HIB, Commentary and Recommendations for Handling, Installing, and Bracing Metal Plate Connected Wood Trusses.

4. Structural Building Components Association (SBCA) Building Component Safety Information (BCSI), Guide to Good Practice for Handling, Installing, Restraining, and Bracing of Metal Plate Connected Wood Trusses.

E. Wood Structural Design Standard: Comply with applicable requirements in the American Wood Council's (AWC) "National Design Specifications for Wood Construction" and any of its Supplements.

PART 2 PRODUCTS

2.01 DIMENSION LUMBER

A. Lumber: DOC PS 20, as specified in Section 06 10 00, ROUGH CARPENTRY, and applicable rules of grading agencies indicated. If no grading agency is indicated, provide lumber that complies with the applicable rules of any rules writing agency certified by the ALSC Board of Review. Provide lumber graded by an agency certified by the ALSC Board of Review to inspect and grade lumber under the rules indicated.

1. Factory mark each piece of lumber with grade stamp of grading agency.

2. For exposed lumber indicated to receive a stained or natural finish, omit grade stamp and provide certificates of grade compliance issued by grading agency.

3. Provide dressed lumber, S4S, manufactured to actual sizes required by DOC PS 20 for moisture content specified.

4. Provide dry lumber with 19 percent maximum moisture content at time of dressing.

B. Grade and Species: For truss chord and web members, provide dimension lumber of any species, graded visually or mechanically, and capable of supporting required loads without exceeding allowable design values according to AWC's "National Design Specifications for Wood Construction" and any of its Supplements.

2.02 METAL CONNECTOR PLATES

A. Available Manufacturers: Subject to compliance with requirements, manufacturers offering products that may be incorporated into the work include, but are not limited to, the following:

1. Alpine, an ITW Company.

2. Cherokee Metal Products, Inc., a subsidiary of Masengill Machinery Company.

3. Eagle Metal Products.

4. MiTek Industries, Inc.; a subsidiary of Berkshire Hathaway, Inc.

5. Simpson Strong-Tie, Inc.

B. General: Fabricate connector plates to comply with TPI 1 from metal complying with the requirements indicated below.

1. Hot-Dip Galvanized Steel Sheet: ASTM A653; G60 coating designation; designation SS, Grade 33 and not less than 0.036-inch thick.

2.03 FASTENERS

A. General: Provide fasteners of size and type indicated on the Drawings, or as required by the truss manufacturer or fabricator, that comply with requirements specified in this Article for material and manufacture.

1. Where trusses are exposed to weather, in ground contact, made from pressure-preservative treated wood, or in area of high relative humidity, provide steel fasteners with hot-dip zinc coating complying with ASTM A153 or made of Type 304 stainless steel.

B. Nails, Brads, and Staples: ASTM F1667 or ASTM F547, size and type best suited for purpose.

C. Power-Driven Fasteners: ICC Evaluation Service Report ESR-1539.

D. Wood Screws: ASME B18.6.1.

E. Lag Bolts: ASME B18.2.1.

F. Bolts: Steel bolts complying with ASTM A307, Grade A; with ASTM A563 hex nuts and, unless indicated otherwise, flat washers.

2.04 METAL TRUSS ACCESSORIES

A. Basis-of-Design Products: Subject to compliance with requirements, provide products indicated on Drawings or comparable products from other approved manufacturers:

1. Simpson Strong-Tie Co., Inc.

2. Or approved equal.

B. Allowable Design Loads: Provide products with allowable design loads, as published by manufacturer, that meet or exceed those indicated on the

Drawings. Manufacturer's published values shall be determined from empirical data or by rational engineering analysis and demonstrated by comprehensive testing performed by a qualified independent testing agency.

C. Galvanized Steel Sheet: Hot-dip, zinc-coated steel sheet complying with ASTM A653, G60 coating designation.

D. Truss Tie-Downs (Hurricane or Seismic Ties): Bent strap tie for fastening roof trusses to wall studs below, 2-1/4 inches wide by 16 gauge thick. Tie fastens to both sides of truss and top plates, Simpson H7Z, or approved equal.

2.05 FABRICATION

A. Cut truss members to accurate lengths, angles, and sizes to produce close-fitting joints.

B. Fabricate metal connector plates to sizes, configurations, thicknesses, and anchorage details required to withstand design loads for types of joint designs indicated.

C. Assemble truss members in design configuration as generally indicated on the Drawings; use jigs or other means to ensure uniformity and accuracy of assembly with joints closely fitted to comply with tolerances in TPI 1. Position members to produce design camber indicated.

1. Fabricate wood trusses within manufacturing tolerances in TPI 1.

D. Connect truss members by metal connector plates located and securely embedded simultaneously in both sides of wood members by air or hydraulic press.

PART 3 EXECUTION

3.01 DELIVERY, STORAGE, AND HANDLING

A. Handle and store trusses to comply with recommendations of TPI HIB, SBCA BCSI, and the following:

1. Store trusses flat, off the ground, and adequately supported to prevent lateral bending.

2. Protect trusses from weather by covering with waterproof sheeting, securely anchored.

3. Provide for air circulation around stacks and under coverings.

B. Inspect trusses showing discoloration, corrosion, or other evidence of deterioration. Discard and replace trusses that are damaged or defective.

3.02 COORDINATION

A. Time delivery and erection of trusses to avoid extended on-site storage and to avoid delaying progress of other trades whose work must follow erection of trusses.

B. Prior to installation, verify that supports are ready to receive trusses and that bearing surface area is sufficient. Coordinate placement of bearing and/or support items.

3.03 INSTALLATION

A. Install wood trusses only after supporting construction is in place and is braced and secured.

B. If trusses are delivered to the project site in more than one piece, assemble trusses before installing.

C. Hoist trusses in place by lifting equipment suited to sizes and types of trusses required, exercising care not to damage truss members or joints by out-of-plane bending or other causes.

D. Install and brace trusses according to TPI recommendations and as indicated on the Drawings.

E. Install trusses plumb, square, and true to line and securely fasten to supporting construction.

F. Space trusses as indicated on the Drawings; adjust and align trusses in location before permanently fastening.

G. Anchor trusses securely at bearing points; use metal framing anchors. Install fasteners through each fastener hole in truss accessories according to manufacturer's fastening schedules and written instructions.

H. Securely connect each truss ply required for forming built-up girder trusses.

1. Anchor trusses to girder trusses as indicated.

I. Install and fasten permanent bracing during truss erection and before construction loads are applied. Anchor ends of permanent bracing where terminating at walls or beams.

1. Install bracing to comply with Section 06 10 00, ROUGH CARPENTRY.

J. Install wood trusses within installation tolerances in TPI 1.

K. Do not cut or remove truss members.

L. Replace wood trusses that are damaged or do not meet requirements. Do not alter trusses in field.

3.04 REPAIRS AND PROTECTION

A. Repair damaged galvanized coatings on exposed surfaces with galvanized repair paint according to ASTM A780 and manufacturer's written instructions.

B. Protective Coating: Clean and prepare exposed surfaces of metal connector plates. Brush apply primer, when part of coating system, and one coat of protective coating.

1. Apply materials to provide minimum dry film thickness recommended by coating system manufacturer.

3.05 FIELD QUALITY CONTROL

A. Testing Agency: Owner may engage a qualified independent testing and inspecting agency to inspect wood construction.

B. Correct deficiencies in any work that test reports and inspections indicate does not comply with the Contract Documents.

END OF SECTION 06 13 00

PART 1 GENERAL

1.01 WORK INCLUDED

A. This section covers the work necessary to furnish and install, complete, all below-grade dampproofing.

B. Dampproofing shall be provided on the exterior side of all buried concrete walls and where shown on the Drawings or specified elsewhere.

1.02 GENERAL

A. See Volume 1 and Division 01 00 00, GENERAL REQUIREMENTS, which contain information and requirements that apply to the work specified herein and are mandatory for this project.

1.03 SUBMITTALS

A. Submittals shall be made in accordance with Section 01 33 00, SUBMITTALS. In addition, the following specific information shall be provided:

1. Manufacturer's Literature: Submit manufacturer's literature, specifications, and application instructions for dampproofing materials.

2. Certificate: Submit manufacturer's certificate of conformance with these specifications.

PART 2 PRODUCTS

2.01 GENERAL

A. The use of a manufacturer's name and catalog number is for the purpose of establishing the standard of quality desired only. Products of other manufacturers will be considered in accordance with the General Conditions.

2.02 DAMPPROOFING

A. Asphalt compound of brush or spray consistency conforming to ASTM D1187, Type I and ASTM D1227, Type II, Class 1 or 2 with an ASTM D41 asphalt primer for cold applied fibrated emulsified asphalt, as manufactured by;

1. W.R. Meadows, Inc. Seal-Mastic Type II.

2. BASF/Master Builders Solutions MasterSeal 615.

3. Henry Company HE789.

4. Or equal.

PART 3 EXECUTION

3.01 PRODUCT DELIVERY, STORAGE, AND HANDLING

A. Deliver materials in original sealed containers, clearly marked with manufacturer's name, brand name, and type of material.

B. Store materials in area where temperatures are not less than 50 degrees F or over 85 degrees F, unless otherwise authorized by the manufacturer.

3.02 ENVIRONMENTAL REQUIREMENTS

A. Do not start work until the following environmental requirements are met:

1. Do not proceed with application of materials when ambient temperature is less than 50 degree F.

2. Do not apply dampproofing in rainy conditions or within 3 days after surfaces become wet from rainfall or other moisture.

3. Do not apply materials when low temperature of 40 degrees F or less is predicted within a period of 24 hours after application. Maintain ambient temperatures above 40 degrees F for 24 hours before and during application, and until material has cured.

3.03 INSPECTION

A. Examine surfaces to receive dampproofing to assure conditions are satisfactory for application of materials.

3.04 SURFACE PREPARATION

A. Clean surfaces to remove dust, dirt, oil, wax, efflorescence, and other foreign materials, in accordance with dampproofing manufacturer's instructions.

B. Remove efflorescence by scrubbing surface with muriatic acid and thoroughly rinsing with water.

C. Allow 3 days drying time following washing down of substrate surfaces.

D. Fill all cracks, voids, and honeycombs with mortar to provide sound surface for dampproofing.

3.05 APPLICATION

A. Apply dampproofing with a brush, or with manufacturer approved low pressure airless spray equipment with a coarse nozzle.

B. Apply materials at rate and as recommended by the manufacturer and in two coats, to produce a smooth, uniform dry film with no voids or defects. Dull or porous spots shall be recoated with a third coat.

C. Start application at top of wall and work down surface, keeping a wet edge at all times, forming a continuous, unbroken film, free from pinholes and other surface breaks. If not shown otherwise, apply dampproofing from 2 inches below finish grade elevation to top of footings.

D. Dampproofing materials shall seal tightly around pipes and other items projecting through the dampproofing.

3.06 ADJUST AND CLEAN

A. Clean spillage and overspray from adjacent surfaces as recommended by the manufacturer.

3.07 FIELD QUALITY CONTROL

A. After dampproofing has dried, spray coat surfaces with water.

B. Recoat surfaces that show water absorption, as recommended by the manufacturer. To prevent blistering, protect surfaces from heat and direct sunlight until dried, then backfill.

END OF SECTION 07 11 13

(This page intentionally left blank)

PART 1 GENERAL

1.01 WORK INCLUDED

A. This section covers the work necessary to furnish and install the building insulation specified herein, complete. The following types of insulation are included:

1. Rigid board insulation at perimeter foundation or footing walls, underside of floor slabs, and where shown on the Drawings.

2. Batt blanket insulation in wall and/or ceiling construction and where shown on the Drawings.

3. Spray foamed-in-place insulation where shown on the Drawings.

4. Blown-in-place insulation at where shown on the Drawings.

5. Masonry loose fill insulation at where shown on the Drawings.

B. This section also includes the work necessary to provide and install vapor retarder materials.

1.02 GENERAL REQUIREMENTS AND REFERENCE STANDARDS

A. See Conditions of the Contract and Division 01 00 00, GENERAL REQUIREMENTS, which contain information and requirements that apply to the work specified herein and are mandatory for this project.

B. Definitions: Thermal resistivity or R-value represents the rate of heat flow through a homogeneous material exactly 1-inch thick and are expressed by the temperature difference in degrees F between the two exposed faces required to cause 1 BTU to flow through 1 square foot per hour at mean temperatures indicated.

C. Fire Performance Characteristics: Provide insulation with fire performance characteristics indicated per ASTM E119, ASTM E84 and ASTM E136, as applicable, and which correspond to products listed in UL "Fire Resistance Directory" or "Building Materials Directory".

D. Maximum Allowable Asbestos Content: Less than 0.25 percent by weight of asbestos of any type or mixture of types occurring naturally as impurities, as determined per Appendix A of 40 CFR 763.

E. Other ASTM Standards as referenced herein for specific building insulation materials shall be fully complied with.

1.03 SUBMITTALS

A. See Section 01 33 00, SUBMITTALS for submittal procedures. Provide the following for each type of building insulation material.

B. Product Data: Provide data on product characteristics, performance criteria, and product limitations.

C. Manufacturer's Installation Instructions: Indicate special procedures, and perimeter conditions requiring special attention.

D. Manufacturer's Certificate: Certify that products meet or exceed specified requirements.

1.04 QUALITY ASSURANCE

A. Manufacturer Qualifications: Company specializing in manufacturing products of the type specified in this section, with not less than three years of experience.

B. Applicator Qualifications: Company specializing in performing work of the type specified, with minimum three years of experience.

1.05 REGULATORY REQUIREMENTS

A. Conform to applicable code for flame and smoke limitations.

1.06 FIELD CONDITIONS

A. Do not install insulation in damp or wet conditions, and follow manufacturer’s instructions for proper field conditions prior to installation.

B. Do not install spray foamed-in-place insulation when ambient temperature is lower than 70 degrees F.

PART 2 PRODUCTS

2.01 MANUFACTURERS

A. Subject to compliance with requirements specified herein and as shown on the Drawings, available manufacturers offering insulation products that may be incorporated into the work include, but are not limited to:

1. Rigid Foam Board Insulation: Owens Corning Corporation, Insulfoam/Carlisle, Kingspan Insulation, or approved equal.

2. Batt Insulation: Certainteed Corporation, Owens Corning Corporation, Johns Manville, or approved equal.

3. Foamed-In-Place Insulation: BASF Corporation, Johns Manville Corbond, or approved equal.

4. Blown-In-Place Insulation: Certainteed Corporation, Owens Corning Corporation, Johns Manville, or approved equal.

5. Loose Fill Insulation: The Schundler Company, Dicalite Management Group, Midland Concrete Products, or approved equal.

2.02 RIGID FOAM BOARD INSULATION MATERIALS

A. Expanded Polystyrene Board Insulation: ASTM C578; Type I with the following characteristics:

1. Flame Spread Index: 75 or less, when tested in accordance with ASTM E84.

2. Minimum Board Density: 0.9 pounds per cubic foot.

3. Minimum Compressive Resistance: 10 psi.

4. Minimum Thermal Resistance (R-value): 3.60 hr-sq. ft.-deg F/BTU per inch thickness.

5. Minimum Board Thickness: 2 inches unless shown otherwise.

B. Extruded Polystyrene Board Insulation: ASTM C578, Type IV; Extruded polystyrene board with either natural skin or cut cell surfaces; with the following characteristics:

1. Flame Spread Index: 75 or less, when tested in accordance with ASTM E84.

2. Smoke Developed Index: 450 or less, when tested in accordance with ASTM E84.

3. Board Size: 48 by 96 inch.

4. Minimum Board Thickness: 3 inches for cavity wall insulation, unless shown otherwise.

5. Board Edges: Square.

6. Minimum Thermal Resistance (R-value): 5.00 hr-sq. ft.-deg F/BTU per inch thickness.

7. Minimum Compressive Resistance: 25 psi.

8. Minimum Board Density: 1.55 pounds per cubic foot.

2.03 BATT INSULATION MATERIALS

A. General: Provide pre-formed units in sizes to friction fit the applications indicated on the Drawings, selected from manufacturer's standard thicknesses, widths, and lengths that comply with the requirements herein and referenced standards.

B. Unfaced Batt Insulation: ASTM C665, Type I; conforming to the following:

1. Material: Glass or mineral fiber.

2. Flame Spread Index: 25 or less, when tested in accordance with ASTM E84.

3. Smoke Developed Index: 150 or less, when tested in accordance with ASTM E84.

4. Combustibility: Non-combustible, when tested in accordance with ASTM E136.

5. Formaldehyde and/or Asbestos Content: Zero.

6. Thermal Resistance, R-value, as indicated on the Drawings, R = 19 minimum.

C. Faced Batt Insulation: ASTM C665, Type III, Class A; conforming to the following:

1. Material: Glass or mineral fiber.

2. Flame Spread Index: 25 or less, when tested in accordance with ASTM E84.

3. Smoke Developed Index: 100 or less, when tested in accordance with ASTM E84.

4. Combustibility: Non-combustible, when tested in accordance with ASTM E136.

5. Formaldehyde and/or Asbestos Content: Zero.

6. Thermal Resistance, R-value, as indicated on the Drawings, R = 19 minimum.

7. Facing: Reflective Category 1 vapor retarder membrane facing with flame spread of 25 or less. Facing shall provide flanges along edges for attachment to framing members.

2.04 FOAMED-IN-PLACE INSULATION MATERIALS

A. Foamed-In-Place Insulation: Polyurethane type, closed cell (minimum 90 percent), complying with ASTM C1029, Type II.

1. Minimum Thermal Resistance: R-value = 6.5 Deg F-sq ft-hr/BTU per inch thickness when tested in accordance with ASTM C518.

2. Maximum Water Vapor Transmission: 0.80 perms at 2-inch thickness, measured in accordance with ASTM E96, Desiccant Method.

3. Minimum Density: 2.0 pounds/cubic foot, when tested in accordance with ASTM D1622.

4. Minimum Compressive Strength: 25 psi, complying with ASTM D1621, Procedure A.

5. Surface Burning Characteristics: Flame spread/Smoke developed index of less than 25/450, when tested in accordance with ASTM E84.

2.05 BLOWN-IN-PLACE INSULATION

A. Glass Fiber Insulation: ASTM C764, Type I Pneumatic.

B. Cellulose Fiber Insulation: ASTM C739, bulk for pneumatic placement.

C. Thermal Resistance R-value: Minimum R-value shall be as shown on the Drawings. The R-value must be the value the product achieves after settlement.

D. Maximum Flame Spread/Smoke Developed Index: 25/150, when tested according to ASTM E84.

E. Prohibited Materials: Asbestos, urea formaldehyde, and ammonium sulfate.

2.06 MASONRY LOOSE FILL INSULATION

A. Perlite Loose Fill: ASTM C549, Type II or IV, water repellant and fire resistant.

B. Vermiculite Loose Fill: ASTM C516, Type II, Grade 1, water repellant and fire resistant.

C. Thermal Resistance R-value: Minimum R-value shall be as shown on the Drawings. The R-value must be the value the product achieves after settlement.

D. Flame/Smoke Contribution: 0/0, according to ASTM E84.

E. Prohibited Materials: Asbestos, urea formaldehyde, and ammonium sulfate.

2.07 ACCESSORIES

A. Sheet Vapor Retarder: Clear polyethylene film for above grade wall and roof applications complying with the requirements of ASTM D4397, 6 mils thick, with a maximum permeance rating of 0.13 perm. Black polyethylene film for below grade and under concrete slab applications complying with the requirements of ASTM D4397, 20 mils thick, with a maximum permeance rating of 0.13 perm.

B. Tape: Polyethylene self-adhering type, mesh reinforced, 2-inch wide.

C. Nails or Staples: Steel wire; galvanized; type and size to suit application.

D. Adhesive: Type recommended by insulation manufacturer for application.

E. Primer: As required by insulation manufacturer.

PART 3 EXECUTION

3.01 DELIVERY, STORAGE, AND HANDLING

A. Deliver insulation materials to site in original sealed wrapping bearing manufacturer’s name and brand designation, type, grade, R-value and class with appropriate ASTM standard.

B. Protect insulation materials from physical damage and from deterioration by moisture, soiling, and other sources. Store inside and in a dry location until ready for installation. Comply with the manufacturer’s recommendations and instructions for handling, storing, and protecting during storage and installation.

3.02 EXAMINATION

A. Verify that substrate, adjacent materials, and insulation materials are dry and that substrates are ready to receive insulation and adhesive.

B. Verify substrate surfaces are flat, free of honeycomb, fins, irregularities, or materials or substances that may impede adhesive bond.

C. Verify work within construction spaces or crevices are complete prior to foamed-in-place insulation application.

D. Verify that surfaces are clean, dry, and free of matter that may inhibit foamed-in-place insulation or overcoat adhesion.

E. Do not proceed with insulation installation until all unsatisfactory conditions have been corrected.

3.03 GENERAL INSTALLATION

A. Comply with insulation manufacturer's instructions for installation of insulation.

3.04 RIGID BOARD INSTALLATION AT FOUNDATION PERIMETER

A. Install boards horizontally on foundation perimeter in locations shown and in thicknesses as specified and shown.

1. Stagger end joints and butt edges and ends tightly to adjacent boards and to protrusions. Place boards in method to maximize contact bedding.

2. Where shown with more than one layer or where shown to be thicker than 1-1/2 inches and using two layers of boards, adhere first layer to substratum, then adhere second layer to first, staggering all joints.

3. Follow manufacturer's recommendations for preparing surfaces and applying adhesives.

B. Cut insulation with saw, knife, or other sharp tool and fit insulation tightly to protrusions or interruptions to the insulation plane.

3.05 RIGID BOARD INSTALLATION UNDER CONCRETE SLABS

A. Place insulation under slabs on grade after base for slab has been compacted.

B. Cut and fit insulation tightly to protrusions or interruptions to the insulation plane.

C. Prevent insulation from being displaced or damaged while placing vapor retarder and placing slab.

3.06 RIGID BOARD CAVITY WALL INSTALLATION

A. Install cavity wall insulation as shown on the Drawings and as recommended by the manufacturer. Use recommended adhesive or fasteners that improve positioning and bond of insulation.

B. Install boards horizontally between wall reinforcement as required. Place boards in a manner to maximize contact bedding. Stagger end joints and butt edges and ends tight to adjacent boards and protrusions.

C. Cut insulation with saw, knife, or other sharp tool and fit insulation tightly to protrusions or interruptions to the insulation plane.

D. Install insulation in wall cavity to maintain air space as shown on the Drawings outside of the insulation to allow for cavity drainage.

3.07 BATT INSTALLATION

A. Install glass/mineral fiber (batt) insulation in accordance with manufacturer's instructions.

B. Install in exterior wall, roof, and/or ceiling spaces where shown on the Drawings without gaps or voids. Do not compress insulation. Install blankets to butt tightly against adjoining blankets and to studs, rafters, joists, sill plates, headers, and any obstructions. Provide continuity and integrity of insulation at corners, wall to ceiling joints, roof, and floor as required.

C. Trim insulation neatly to fit spaces. Insulate miscellaneous gaps and voids.

D. Fit insulation tightly in cavities and tightly to exterior side of mechanical and electrical services within the plane of the insulation.

E. For batt insulation provided with factory applied vapor retarder facing, install the facing membrane side facing the arm side of building spaces. Lap ends and side flanges of membrane over framing members. Staple or nail facing flanges in place at maximum 12 inches on center.

F. For batt insulation without factory applied facing membrane, place separate vapor retarder material on warm side of insulation by stapling or nailing at

maximum 12 inches on center. Lap and seal sheet retarder joints over member face as specified hereinafter.

3.08 FOAMED-IN-PLACE INSULATION INSTALLATION

A. Preparation:

1. Prepare surface to receive foamed-in-place insulation free of dirt, grease, oil, loose paint, excessive rust scale, and any other foreign or deleterious materials that prevent adequate insulation **<or overcoat>** adhesion.

2. Mask and protect adjacent surfaces from over spray or dusting.

3. Apply primer in accordance with manufacturer's instructions.

B. Application:

1. Apply insulation in accordance with manufacturer's instructions.

2. Apply insulation by spray method, to a uniform monolithic density without voids and providing a blanket of uniform texture.

3. Patch damaged areas.

4. Minimum insulation blanket thickness shall be as shown on the Drawings, or 2 inches if not shown.

3.09 MASONRY LOOSE FILL INSULATION INSTALLATION

A. Before placement, fill weep holes with glass fiber rope or copper screen to prevent leakage or escape of insulation. Verify that substrate, adjacent materials, and insulation are dry and ready to receive insulation. Verify that spaces are free of mortar or other materials to allow free flow of insulation.

B. Pour insulation from bags into unfilled cells of hollow masonry units, except veneer and cavity walls.

C. Install insulation as wall is erected, completely filling spaces. Pours may be made at convenient intervals, but height of pours shall not exceed 6 feet.

D. Do not rod or tamp loose fill insulation.

3.10 BLOWN-IN-PLACE INSULATION INSTALLATION

A. Verify that substrate, adjacent materials, and insulation are dry and ready to receive insulation. Verify that spaces are unobstructed to allow for placement of insulation.

B. Provide equipment access ports as required and place insulation pneumatically; tight in stud, joist, or rafter spaces; to the density recommended by the manufacturer to achieve the required R-value.

C. Completely fill intended spaces, leaving no gaps or voids. Place insulation against and behind mechanical, electrical, and other similar services and equipment within the plane of insulation. Where shown to be placed in ceilings or attics, place insulation against baffles and do not impede natural ventilation to soffits.

3.11 VAPOR BARRIER INSTALLATION

A. Extend vapor barrier to extremities of areas to be protected as shown and at conditioned spaces to the interior side of insulated assemblies including miscellaneous voids and cavities.

B. Fasten and seal vapor barrier to all building members; at all top, end, and bottom edges; at perimeter of wall openings and at lap joints. Lap all joints across two framing members or a minimum of 6 inches at continuous substrate.

C. Seal any joints at pipes, conduits, and other items penetrating the vapor barrier.

D. Repair any tears or punctures in vapor barriers immediately prior to concealment by other work. Cover with vapor barrier tape or another layer of vapor barrier.

3.12 PROTECTION

A. Do not permit installed insulation to be damaged prior to its concealment.

B. Do not permit subsequent construction work to disturb applied foamed-in-place insulation.

C. Protect installed insulation and vapor barriers from damage due to harmful weather exposures, physical abuse, and other causes.

3.13 CLEANING

A. Remove from site all containers, wrappings, and scrap insulation material. Dispose of off-site at approved location. Leave all floors broom clean.

END OF SECTION 07 21 00

(This page intentionally left blank)

PART 1 GENERAL

1.01 WORK INCLUDED

A. Furnish and install a complete, new clay tile roofing system, including clay roof tiles, underlayment, flashings, accessories, and attachments necessary to provide a code-compliant, watertight, and warrantable roofing system. This section also includes the work necessary to provide and install vapor retarder materials.

B. Work includes new construction only.

1.02 GENERAL REQUIREMENTS AND REFERENCE STANDARDS

A. See Conditions of the Contract and Division 01 00 00, GENERAL REQUIREMENTS, which contain information and requirements that apply to the work specified herein and are mandatory for this project.

B. References

1. ASTM C1167 – Standard Specifications for Clay Tiles
2. ASTM C1568 – Wind Resistance of Concrete and Clay Roof Tiles
3. ASTM C1568 – Wind Resistance of Concrete and Clay Roof Tiles
4. ASTM E108 – Fire Tests of Roof Coverings
5. ASTM D226 – Asphalt-Saturated Organic Felt, Type II
6. ASTM D4869 – Asphalt-Saturated Felt Underlayment, Type IV
7. ASTM D1970 – Self-Adhered Polymer-Modified Bituminous Sheet Underlayment
8. Tile Roofing Industry Alliance (TRI) Concrete and Clay Roof Tile Installation Manual (March 2024)
9. International Building Code (IBC), as adopted by the City of Bullhead City.
10. Other ASTM Standards as referenced herein for specific building insulation materials shall be fully complied with.

1.03 SUBMITTALS

A. See Section 01 33 00, SUBMITTALS, for submittal procedures. Provide the following for each type of building insulation material.

B. Product Data: Provide data on product characteristics, performance criteria, and product limitations.

C. Manufacturer's Installation Instructions: Indicate special procedures and perimeter conditions requiring special attention.

D. Manufacturer's Certificate: Certify that products meet or exceed specified requirements.

1.04 QUALITY ASSURANCE

A. Manufacturer Qualifications: Company specializing in manufacturing products of the type specified in this section, with not less than three years of experience.

B. Installer Qualifications: Company specializing in performing work of the type specified, with a minimum of five (5) years of experience installing clay tile roof systems in Arizona or similar climates.

1.05 FIELD CONDITIONS

A. Do not install insulation in damp or wet conditions, and follow manufacturer’s instructions for proper field conditions prior to installation.

PART 2 PRODUCTS

2.01 CLAY ROOF TILES

A. Subject to compliance with requirements specified herein and as shown on the Drawings, available manufacturers offering insulation products that conform to the following:

1. Clay tiles shall comply with ASTM C1167.

2. Minimum Class A fire rating per ASTM E108.

3. Wind resistance minimum 90 mph per ASTM C1568

4. Tiles shall meet IECC Solar Reflectance Index requirments applicable to project climate zone.

2.02 UNDERLAYMENT

A. Provide new underlayment across the entire roof surface.

B. Base underlayment: ASTM D226 Type II or ASTM D4869 Type IV.

C. Self-adhered membrane: ASTM D1970 at eaves, valleys, hips, ridges, and penetrations.

2.03 FLASHINGS AND ACCESSORIES

A. Provide new metal flashings at valley, hips, rides, edges, penetrations, and transitions.

B. Flashings shall be corrosioin-resistant and compatilbe with roofing materials.

PART 3 EXECUTION

3.01 DELIVERY, STORAGE, AND HANDLING

A. Deliver materials to site in original sealed wrapping bearing manufacturer's name and brand designation, type, grade, and class with appropriate ASTM standard.

B. Protect materials from physical damage and from deterioration by moisture, soiling, and other sources. Store in a dry location until ready for installation. Comply with the manufacturer's recommendations and instructions for handling, storing, and protecting during storage and installation.

3.02 EXAMINATION

A. Verify that roof deck is sound, dry, and properly sloped prior to roofing installation.

B. Do not proceed with roof tile installation until all unsatisfactory conditions have been corrected.

3.03 GENERAL INSTALLATION

A. Install underlayment, flashings, and clay tiles in accordance with manufacturer instructions, TRI manuals, and approved submittals.

B. Mechanically fasten clay tiles; adhesive-only attachment is not permitted.

C. Maintain required headlap, sidelap, and fastener spacing.

3.04 FIELD QUALITY CONTROL

A. Replace broken or damaged tiles immediately.

B. Ensure the completed roof is watertight and free of installation defects.

3.05 WARRANTY

A. Provide manufacturer warranty for clay tiles and accessories for a period of twelve (12) months following substantial completion of the entire project.

B. Provide installer workmanship warranty of not less than five (5) years.

END OF SECTION 07 21 00

DIVISION 07 00 00 – THERMAL AND MOISTURE PROTECTION

PART 1 GENERAL

1.01 WORK INCLUDED

A. This section includes the work necessary to furnish and install, complete, miscellaneous flashing and sheet metal items, including flashings and counter flashings**,** prefinished downspouts, prefinished scuppers, reglets, vent stacks, and miscellaneous accessories.

1.02 GENERAL REQUIREMENTS

A. Like items of materials provided hereunder shall be the end products of one manufacturer to achieve standardization for appearance, maintenance, and replacement.

B. See Volume 1 and Division 01 00 00, GENERAL REQUIREMENTS, which contain information and requirements that apply to the work specified herein and are mandatory for this project.

1.03 REFERENCE STANDARDS

A. AAMA 2605 - Voluntary Specification, Performance Requirements and Test Procedures for Superior Performing Organic Coatings on Aluminum Extrusions and Panels.

B. ASTM A653 - Standard Specification for Steel Sheet, Zinc-Coated (Galvanized) or Zinc-Iron Alloy-Coated (Galvannealed) by the Hot-Dip Process.

C. ASTM D4586 - Standard Specification for Asphalt Roof Cement, Asbestos-Free.

D. SMACNA (ASMM) - Architectural Sheet Metal Manual; Sheet Metal and Air Conditioning Contractors' National Association.

E. NRCA – National Roofing Contractor’s Association; Roofing Manual.

1.04 SUBMITTALS

A. See Section 01 33 00, SUBMITTALS for submittal procedures.

B. Shop Drawings: Indicate material profile, jointing pattern, jointing details, fastening methods, flashings, terminations, and installation details.

1. Submit color samples where applicable from manufacturer’s standard colors.

1.05 QUALITY ASSURANCE

A. Perform work in accordance with SMACNA Architectural Sheet Metal Manual requirements and standard details, except as otherwise indicated. Conform to profiles and sizes shown on the Drawings and comply with ASMM for each general category of work required.

B. Perform work in accordance with NRCA Roofing Manual requirements and standard details, except as otherwise indicated.

C. Maintain one copy of each document on site.

PART 2 PRODUCTS

2.01 SHEET MATERIALS

A. Galvanized Steel: ASTM A653, Grade A, with G90 zinc coating; minimum 24 gauge (0.0239-inch) thick base metal.

B. Pre-Finished Galvanized Steel: ASTM A653 and ASTM A755, Grade A, with G90 zinc coating; minimum 24 gauge (0.0239-inch) thick base metal, shop pre-coated with PVDF coating:

1. PVDF (Polyvinylidene Fluoride) Coating: Superior Performance Organic Finish, AAMA 2605; multiple coat, thermally cured fluoropolymer finish system. Minimum dry film thickness shall be 0.8 to 1.3 mils.

2. Color: To be selected from manufacturer's standard line of colors.

3. Manufacturer: Pac-Clad by Peterson Aluminum Corporation; Flourpon PVDF by Morin Corporation; or equal.

C. Aluminum: ASTM B209, Alloy 3003, H14 temper, with mill finish; minimum 21 gauge (0.0329-inch) thick base metal.

D. Pre-Finished Aluminum: ASTM B209, Alloy 3003, H14 temper, with mill finish; minimum 21 gauge (0.0329-inch) thick base metal, shop pre-coated with PVDF coating:

1. PVDF (Polyvinylidene Fluoride) Coating: Superior Performance Organic Finish, AAMA 2605; multiple coat, thermally cured fluoropolymer finish system. Minimum dry film thickness shall be 0.8 to 1.3 mils.

2. Color: To be selected from manufacturer's standard line of colors.

3. Manufacturer: Pac-Clad by Peterson Aluminum Corporation; Flourpon PVDF by Morin Corporation; or equal.

E. Schedule: Provide appropriate materials as shown on the Drawings. All visible flashing, any flashing as noted on the Drawings, and visible items such as gutters and downspouts, shall be pre-finished material.

2.02 ACCESSORIES

A. Fasteners: Galvanized steel or stainless steel, or same material and finish as flashing metal, with soft neoprene washers.

B. Primer: Zinc chromate type.

C. Plastic Cement: ASTM D4586, Type I.

D. Underlayment: Ice and water shield underlayment, Owens Corning Titanium UDL50 synthetic roofing underlayment; GAF Tiger Paw synthetic roof underlayment; or equal.

E. Isolation Paint: As specified in Section 09 90 00, PAINTING, System No. 27.

F. Isolation Tape: Butyl or polyisobutylene, internally reinforced.

G. Reglets: Surface mounted or recessed, as appropriate for installation requirements, minimum 26 gauge galvanized steel or minimum 21 gauge aluminum, as manufactured by Fry Reglet Corporation; OMG Roofing Products; or equal.

H. Metal Splash Pans and Downspout Boots: Fabricate of same metal as downspouts, size as required for installation.

2.03 FABRICATION

A. Form sections true to shape, accurate in size, square, and free from distortion or defects. Fabricate in accordance with SMACNA ASMM.

B. Fabricate cleats of galvanized sheet metal, interlockable with sheet.

C. Form pieces in longest possible lengths.

D. Hem exposed edges on underside ½-inch; miter and seam corners.

E. Form material with flat lock seams, except where otherwise indicated. At moving joints, use sealed lapped, bayonet-type or interlocking hooked seams.

F. Fabricate corners from one piece with minimum 18-inch long legs; seam for rigidity, seal with sealant.

G. Fabricate vertical faces with bottom edge formed outward ¼-inch and hemmed to form drip.

H. Fabricate flashings to allow toe to extend 2 inches over roofing. Return and brake edges.

I. Fabricate gutters and/or downspouts to profile and size as shown on the Drawings. Fabricate gutter and downspout accessories (supports, anchorage devices, etc.) in profile and size to suit gutter or downspout.

PART 3 EXECUTION

3.01 DELIVERY, STORAGE, AND HANDLING

A. Package and protect during shipment. Inspect for damage, dampness, and wet storage stains upon delivery to jobsite.

B. Carefully handle and stack materials to prevent twisting, bending, and abrasion, and to provide ventilation. Slope metal sheets to ensure drainage.

C. Prevent contact with materials that could cause discoloration or staining.

D. Remove from the jobsite and replace at no additional cost to the Owner, damaged or permanently stained materials that cannot be restored to like new condition.

3.02 EXAMINATION

A. Verify roof openings, curbs, pipes, sleeves, ducts, and vents through roof are solidly set, reglets in place, and nailing strips located.

B. Verify roofing termination and base flashings are in place, sealed, and secure.

3.03 INSTALLATION

A. Conform to applicable Drawing or Reference Standard details.

B. Secure flashings in place using concealed noncorrosive fasteners. Use exposed fasteners only where permitted. Provide for thermal expansion and building movements. Comply with recommendations of "Architectural Sheet Metal Manual" by SMACNA.

C. Apply plastic cement compound between metal flashings and felt flashings.

D. Fit flashings tight in place. Make corners square, surfaces true and straight in planes, and lines accurate to profiles.

E. Seal metal joints watertight. Seal moving joints in metal work with elastomeric joint sealants, complying with requirements specified in Section 07 90 00, CAULKING AND SEALANTS.

F. Provide for thermal expansion of running sheet metal work by overlaps of expansion joints in fabricated work. Where required for water-tight construction, provide hooked flanges filled with polyisobutylene mastic for

1-inch embedment of flanges. Space joints at intervals of not more than 50 feet for steel, or as recommended by manufacturer.

G. Provide supports and stiffeners as recommended by manufacturer. Steel, where shown or required, shall be galvanized.

H. Secure flanges of expansion joint units to substrates.

I. Isolate metal from wood and concrete and from dissimilar metal with two coats of specified isolation paint, or isolation tape. Use only stainless steel fasteners to connect isolated dissimilar metals.

J. Install reglets in accordance with manufacturer's latest printed instructions.

K. Secure gutters and downspouts in place using concealed fasteners. Slope gutters ¼-inch per foot.

L. Performance: Water-tight and weatherproof performance of flashing and sheet metal work is required.

END OF SECTION 07 62 00

DIVISION 07 00 00 - THERMAL AND MOISTURE PROTECTION

PART 1 GENERAL

1.01 WORK INCLUDED

A. This section includes the work necessary to furnish and install, complete, sealant and backing for all structure and building joints.

1.02 GENERAL REQUIREMENTS

A. See CONDITIONS OF THE CONTRACT and Division 01 00 00, GENERAL REQUIREMENTS, which contain information and requirements that apply to the work specified herein and are mandatory for this project.

B. Performance: Provide elastomeric joint sealants that establish and maintain watertight and airtight continuous joint seals without staining or deteriorating joint substrates.

1.03 REFERENCE STANDARDS

A. ASTM C834 - Standard Specification for Latex Sealants.

B. ASTM C920- Standard Specification for Elastomeric Joint Sealants.

C. ASTM C1193 -Standard Guide for Use of Joint Sealants.

D. Other reference standards specified in this section.

1.04 SUBMITTALS

A. Submittals shall be made in accordance with Section 01 33 00, SUBMITTALS.

B. Submit the following:

1. Product Data: Submit manufacturer's literature, specifications, surface preparation and application instructions for joint sealant materials.

2. Samples: For each material proposed, submit sample of color intended, when required to match joint substrate or range of colors for selection.

3. Sealant Schedule: Submit sealant schedule indicating joint size and special conditions as well as manufacturer, type, and color of proposed product for each application.

4. Certificates of Compliance: Statement indicating proposed materials meet reference standards and specification requirements.

1.05 QUALITY ASSURANCE

A. Installer Qualifications: An experienced installer who has specialized in installing joint sealants similar in material, design, and extent to those indicated for this project and whose work has resulted in joint sealant installations with a record of successful in-service performance.

1.06 ENVIRONMENTAL CONDITIONS

A. Maintain temperature and humidity recommended by the sealant manufacturer during and after installation. Ambient temperature shall be between 40 and 120 degrees F unless otherwise authorized in writing by the manufacturer.

PART 2 PRODUCTS

2.01 GENERAL

A. The use of a manufacturer's name and model or catalog number is for establishing the standard of quality and general configuration desired only. Products of other manufacturers will be considered in accordance with the General Conditions.

B. Sealant material characteristics shall be uniform, homogenous, and free from lumps, skins, and coarse particles when mixed. All sealants shall be nonstaining and nonbleeding. Sealant hardness shall be 15 minimum and 50 maximum as measured by ASTM C661, unless specified otherwise hereinafter.

C. At Contractor’s option, immersible sealant may be substituted for non-immersible sealant of the same material.

2.02 MASTIC JOINT FILLER

A. Mastic joint filler or asphalt fiber expansion joint material shall be a ½-inch, pre-molded, non-extruded, resilient type mastic joint filler conforming to ASTM D1751.

2.03 SEALANT MATERIALS

A. Type 1 - Silicone, Nonsag, Not Immersible: Silicone base, single-component, chemical curing; meeting the requirements of ASTM C920, Type S, Grade NS, Class 50, Uses NT, M, A and G; capable of withstanding

movement up to 50 percent of joint width. Use DOWSIL 790 manufactured by Dow Corporation; SCS2000 Silpruf manufactured by GE Silicones; or equal.

B. Type 2 - Multi-Part Polyurethane, Self-Leveling, Immersible: Polyurethane base, multi-component, chemical curing; meeting the requirements of ASTM C920, Type M, Grade P, Class 25, Uses I, T, NT, A, and M; capable of being continuously immersed in water, and withstand movement of up to 25 percent of joint width. Use MasterSeal SL 2 manufactured by BASF/Master Builders Solutions; Iso-Flex 880 GB manufactured by LymTal International Inc.; Vulkem 445SSL manufactured by Tremco Commercial Sealants and Waterproofing; Sikaflex 2cSL manufactured by Sika Corporation; or equal.

C. Type 3 - Multi-Part Polyurethane, Nonsag, Immersible: Polyurethane base, multi-component, chemical curing; meeting the requirements of ASTM C920, Type M, Grade NS, Class 25, Uses I, T, NT, M, and A; capable of being continuously immersed in water, and withstand movement of up to 25 percent of joint width. Use Iso-Flex 881 manufactured by LymTal International Inc.; Dymeric 240FC manufactured by Tremco Commercial Sealants and Waterproofing; Sikaflex 2cNS manufactured by Sika Corporation; MasterSeal NP 2 manufactured by BASF/Master Builders Solutions; or equal.

D. Type 4 - Multi-Part Polyurethane, Nonsag, Not Immersible: Polyurethane base, multi-component, chemical curing; meeting the requirements of ASTM C920, Type M, Grade NS, Class 25, Uses NT, T, A, G, and M; withstand movement of up to 25 percent of joint width; color as selected. Use MasterSeal NP 2 manufactured by BASF/Master Builders Solutions; Dynatrol II manufactured by Pecora Corporation; Dymeric 240FC manufactured by Tremco Commercial Sealants and Waterproofing; Isoflex 881 manufactured by LymTal International Inc.; Sikaflex 2cNS manufactured by Sika Corporation; or equal.

E. Type 5 - One-Part Polyurethane, Immersible: Polyurethane base, single-component, chemical curing; conforming to ASTM C920, Type S, Grade NS or Type P as required by installation, Class 25, Uses I, NT, T, M, and A; capable of being continuously immersed in water, and withstand movement of up to 25 percent of joint width. For nonsag type, use MasterSeal NP 1 manufactured by BASF/Master Builders Solutions; Sikaflex 1a manufactured by Sika Corporation; Vulkem 116 or Dymonic 100 manufactured by Tremco Commercial Sealants and Waterproofing; or equal. For self-leveling type, use Vulkem 45SSL manufactured by Tremco Commercial Sealants and Waterproofing; Sikaflex 1cSL manufactured by Sika Corporation; or equal.

F. Type 6 - One-Part Polyurethane, Not Immersible: Polyurethane base, single-component, chemical curing; meeting the requirements of ASTM C920, Type S, Grade NS, Class 35, Uses NT, T, M, and A; withstand movement of up to 35 percent of joint width. Use Dynatrol I manufactured by Pecora Corporation; Dymonic 100 manufactured by Tremco Commercial Sealants and waterproofing; MasterSeal NP 1 manufactured by BASF/Master Builders Solutions; Sikaflex 1a by Sika Corporation; or equal.

G. Type 10 - Sanitary Sealant/Caulk: Silicone sealant similar to Type 1 above, except Class 25, formulated to resist mold growth and repeated exposure to high humidity while retaining adhesion, flexibility, and color. Color as shown on the Drawings or as selected from manufacturer's full range of color choices. Use Dow Corporation DOWSIL 786; GE Silicones SCS1700 Sanitary Sealant; or equal.

H. Type 11 - Fire-Resistant Penetration Seal: Medium density fire-resistant foam that retains stability at high temperatures. Use 3-6548 Silicone RTV Fire Stop Sealant or Foam manufactured by Dow Corning Corporation; Fire Barrier Sealant 1003SL and Foam FIP 1-Step manufactured by 3M Corporation; Specified Technologies SmokeBlock 200 fire blocking foam and SmokeBlock SB100 fire blocking caulk; or equal.

2.04 BACKUP MATERIAL

A. Non-gassing, extruded, closed-cell round polyethylene foam rod compatible with sealant used. Comply with ASTM C1330 Type B or C, or ASTM D5249 Type 1 or 3, and as recommended by sealant manufacturer. Size as shown or as recommended by sealant material manufacturer. Provide for all joints greater than 3/16-inch wide. Use MasterSeal 920/921 manufactured by BASF/Master Builders Solutions; Sika Backer Rod manufactured by Sika Corporation; CERA-ROD or KOOL-ROD manufactured by W. R. Meadows; or equal.

2.05 BOND BREAKER

A. Pressure sensitive tape recommended by sealant manufacturer to suit application.

2.06 JOINT CLEANER

A. Noncorrosive and non-staining type, recommended by sealant manufacturer; compatible with joint forming materials.

2.07 PRIMER

A. Non-staining type recommended by sealant manufacturer to suit application.

2.08 SEALANT COLOR

A. Unless specifically noted, sealant color shall generally match or complement the color of the principal material adjoining the area of application, or as selected by Owner or Engineer.

2.09 TAPE SEALANT

A. Closed cell polyvinyl chloride (PVC), polyurethane, or neoprene/EPDM-SBR foam, in black color, coated on both sides with a modified acrylic pressure-sensitive adhesive, in 3/4-inch width by length as required by sufficient thickness, as recommended by manufacturer, for particular application, meeting the following requirements:

1. Tensile Strength (ASTM D412): 70 psi min.

2. Elongation (ASTM D412): 125 percent min.

3. Compression Set (ASTM D1056): 35 percent max.

4. Compression Deflection (ASTM D1667) at 25 percent Deflection: 2.5 psi.

5. Low Temperature Flexibility, 5 hours at -40 degrees F: No cracking.

6. Staining (ASTM D925) on Most Substrates: None.

7. Water Absorption by Weight at 35 percent Compression: 3 percent max.

8. Density per Cubic Foot (ASTM D1667): 11 pounds min.

PART 3 EXECUTION

3.01 DELIVERY, STORAGE, AND HANDLING

A. Deliver sealants to the jobsite in sealed containers, each bearing manufacturer's name and product designation, including type, class, grade and use.

B. Store and protect sealant products from damage, deterioration, and contamination in accordance with manufacturer's written recommendations.

3.02 GENERAL INSTALLATION REQUIREMENTS

A. Use of more than one material for the same joint is not allowed unless approved by the sealant manufacturer.

B. Install joint sealants in accordance with ASTM C1193.

C. Sealants shall be self-leveling (S/L, or Grade P) for horizontal and sloping joints with a maximum slope of 1 percent. Nonsag sealants (N/S, or Grade NS) shall be used for steeper sloped joints, vertical joints, and overhead joints.

D. The one-part polyurethane (Types 5 and 6), silicone (Type 1), and acrylic (Type 9) sealants can be used in joints to maximum 1-inch width. Multi-part polyurethane (Types 2, 3, and 4) can be used in joints to 2-inch maximum width. For joints wider than 2-inch, consult manufacturer for proper product application. Follow sealant manufacturer's recommendations.

E. Sealants used in water holding structures must be approved for use in domestic wastewater applications.

3.03 PREPARATION

A. Verify that joint dimensions, and physical and environmental conditions, are acceptable to receive sealant.

B. All surfaces to be sealed shall be clean, dry, sound, and free of dust, loose mortar, oil, and other foreign materials. Clean and prime joints as required by manufacturer.

1. Mask adjacent surfaces where necessary to maintain neat edge.

2. Starting of work will be construed as acceptance of all subsurfaces.

3. Apply primer to dry surfaces as recommended by sealant manufacturer.

C. Verify that joint backing/shaping materials and release tapes are compatible with sealant.

D. Examine joint dimensions and size materials to achieve required width/depth ratios, neck dimensions, and surface bond area as recommended by the manufacturer, except where specific dimensions are indicated on the Drawings.

3.04 CAULKING AND SEALANT INSTALLATION

A. Use joint filler to achieve required joint depths, to allow sealants to perform properly.

1. Install backup material as recommended by sealant manufacturer.

2. Where possible, provide full length sections without splices; minimize number of splices.

B. Use bond breaker where recommended by sealant manufacturer.

C. Apply sealant free of air pockets, foreign embedded matter, ridges, and sags.

D. Seal all joints around window, door, and louver frames; control and/or expansion joints; and elsewhere as indicated.

E. Apply all materials following manufacturer's recommendation and instructions, filling joint completely from back to top, without voids.

F. Apply sealant within recommended temperature ranges. Consult manufacturer when sealant cannot be applied within recommended temperature ranges.

G. Locate tape sealant where indicated on Drawings and install in strict accordance with manufacturer's instructions.

H. Drive caulking compound into the grooves with a caulking gun with sufficient pressure to force out air and to fill grooves solidly using a nozzle of proper size to fit width of grooves. Exposed surface of compound shall be tooled free of wrinkles and uniformly smooth. Leave all adjoining surfaces free of caulking material.

I. Joints: Tool slightly concave after sealant is installed. When tooling white or other light color sealant, use a water wet tool. Finish joints free of air pockets, foreign embedded matter, ridges, and sags.

3.05 MASTIC JOINT FILLER

A. Preformed joint filler shall be installed in accordance with manufacturer's specifications.

3.06 CLEANING

A. Clean surfaces next to the sealed joints of smears or other soiling resultant of sealing application.

B. Replace any damaged surfaces resulting from joint sealing or cleaning activities.

3.07 JOINT SEALANT APPLICATION SCHEDULE

A. This schedule lists the sealant types acceptable for each joint location. Use as few different sealant types as possible to meet the requirements of this project.

Joint Location Description	Sealant Type(s)
1. Not Immersed Expansion/Contraction and Control Joints at:	
Concrete Walls	3, 4, 5, 6
Concrete Floor Slabs	2, 5
Masonry Walls	3, 4, 5, 6
2. Not Immersed Material Joints at:	
Metal Door, Window, and Louver Frames (Exterior)	1, 5, 6
Metal Door, Window, and Louver Frames (Interior)	1, 5, 6, 9
Wall Penetrations (Exterior)	1, 5, 6
Wall Penetrations (Interior)	1, 5, 6
Floor Penetrations	5, 6
Ceiling/Roof Penetrations	1, 3, 4, 5, 6
Sheet Metal Flashings	1, 3, 5
3. Other Joints:	
Threshold Sealant Bed	5
Immersed Concrete (Vertical and Sloped)	3, 5

Immersed Concrete (Horizontal)	2, 5
Openings Around Pipes, Conduits, and Ducts Through Fire Rated Construction	11
Concrete Form Snap-Tie Holes	4, 6
Between Counter Tops and Backsplashes	10
Around Plumbing Fixtures	10

END OF SECTION 07 90 00

(This page intentionally left blank)

PART 1 GENERAL

1.01 WORK INCLUDED

A. This section includes the work necessary to furnish and install, complete, the standard hollow steel frames and doors.

1.02 GENERAL REQUIREMENTS

A. See the GENERAL CONDITIONS and Division 01 00 00, GENERAL REQUIREMENTS, which contain information and requirements that apply to the work specified herein and are mandatory for this project.

1.03 SUBMITTALS

A. Shop drawings and submittals shall be submitted in accordance with Section 01 33 00, SUBMITTALS. Furnish applicable product data information for each type door and frame, relative to door numbers used on the Drawings, including:

1. Frame conditions and complete anchorage details, supplemented by suitable schedules covering doors and frames.

2. Joints required to accommodate expansion joint movement.

3. Location and field splice joints for frames too large to ship in one piece; indicate complete instructions for making field splices.

4. Manufacturer’s installation instructions. Indicate any special instructions.

1.04 QUALITY ASSURANCE

A. Comply with Steel Door Institute (SDI) 108 – Recommended Selection and Usage Guide for Standard Steel Doors, SDI 117 – Manufacturing Tolerances for Standard Steel Doors and Frames, and American National Standards Institute (ANSI) A250.8 – Recommended Specifications for Standard Steel Doors and Frames.

B. Comply with other standards referenced in this section.

PART 2 PRODUCTS

2.01 GENERAL

A. The use of a manufacturer’s name and model or catalog number is for establishing the standard of quality and general configuration desired only.

Products of other manufacturers will be considered in accordance with the General Conditions.

B. All doors and frames provided hereunder shall be the end products of one manufacturer to achieve standardization for appearance, operation, maintenance, spare parts, and manufacturer's service.

2.02 DOOR AND FRAME MATERIALS

A. Subject to compliance with requirements, provide products by one of the following manufacturers:

1. Ceco Door.

2. Curries Company.

3. Fleming Door Products.

4. Pearland Industries.

5. Republic Doors and Frames.

6. Steelcraft.

7. Trudoor Doors and Hardware.

8. Or equal.

B. Hot-Rolled Steel Sheets: ASTM A1011.

C. Cold-Rolled Steel Sheets: ASTM A1008, commercial or drawing quality.

D. Galvanized Steel Sheets: ASTM A653 or ASTM A924, commercial quality or drawing quality, with A60 or G60 coating designation, mill phosphatized.

E. Steel Doors: Provide 1-3/4-inch thick doors of materials and ANSI/SDI 108 and A250.8 duty levels and models specified below, or as indicated on the Drawings or Door Schedule:

1. Interior Non-Rated Doors: Level 2, heavy-duty, Model 2, seamless design, minimum 0.0478-inch (18 gauge) thick cold-rolled steel sheet faces, with cardboard honeycomb, polystyrene, mineral fiberboard, or polyurethane core.

2. Exterior Doors: Level 3, heavy-duty, Model 2, seamless design, minimum 0.0478-inch (18 gauge) thick galvanized steel sheet faces, insulated. Provide rigid polyisocyanurate board or polyurethane

foam insulation providing a minimum calculated core R-value of **10**, measured in accordance with ASTM C518.

3. All Hollow Metal Doors – Interior and Exterior: Provide fillers in top and bottom edges of leaf and weld moisture tight. Provide beveled edge profile on both edges. Door texture shall be smooth faces both sides. Prepare doors to receive door hardware as shown on Door Schedules and as specified in Section 08 71 00, FINISH HARDWARE. Fabricate doors with hardware reinforcement plates welded in place.

4. Where vertical stiffener cores are required, the space between the stiffeners must be filled with rigid board insulation.

F. Frames: Provide frames for doors, sidelights, borrowed lights, and other openings that comply with ANSI/SDI 108 and A250.8; fabricate as welded units to be rigid, neat in appearance, and free from defects, warp, or buckle.

1. Provide face welded units with mitered or coped and continuously welded corners, formed from 0.0598-inch (16 gauge) thick galvanized steel sheet. Fabricate frames with hardware reinforcement plates welded in place.

2. Frames in masonry walls shall be sized to suit masonry coursing with head member 4 inches high to fill opening without cutting masonry units. Frames in steel stud partitions may be “KD” knock-down style. Frames for gypsum board construction shall be slip-on (dry wall) type, except for exterior.

3. Reinforce frames larger than 48 inches with roll formed steel channels fitted tightly into frame head, flush with top.

4. Door Silencers: Resilient rubber, fitted into drilled hole. Three on strike side jambs of single-door frames and two on heads of double-door frames.

5. Plaster or Mortar Guards: Provide where mortar might obstruct hardware operation and to close off interior of openings.

6. Grout: As specified in Section 04 23 00, REINFORCED HOLLOW UNIT MASONRY.

G. Tolerances: Comply with SDI 117.

H. Fabricate concealed stiffeners, reinforcement, edge channels, louvers, and moldings from either cold- or hot-rolled steel sheet.

I. Hardware Preparation: Prepare doors and frames to receive mortised and concealed hardware according to ANSI/SDI A250.8.

J. Finishes, General: Comply with National Association of Architectural Metal Manufacturers Association's (NAAMM's) "Metal Finishes Manual" for recommendations relative to applying and designating finishes. Apply primers and organic finishes to doors and frames after fabrication.

K. Galvanized Steel Sheet Finishes: Comply with SDI 112 – Zinc Coated Steel Doors and Frames, and the following:

1. Surface Preparation: Clean surfaces with nonpetroleum solvent so that surfaces are free of oil or other contaminants. Clean welds, mechanical connections, and abraded areas, and apply galvanizing repair paint specified to comply with ASTM A780.

2. Galvanizing Repair Paint: SSPC-Paint 20, high-zinc-dust-content paint with dry film containing not less than 94 percent zinc dust by weight.

3. Factory Priming for Field-Painted Finish: Where field painting after installation is indicated, apply primer specified below immediately after cleaning and pretreatment.

a. Shop Primer: One shop coat of baked-on rust inhibiting primer compatible with finish field coating as specified hereinafter in Part 3, Execution.

L. Steel Sheet Finishes: Comply with SSPC-PA 1, "Paint Application Specification No. 1", and the following:

1. Surface Preparation: Solvent-clean surfaces according to SSPC-SP 1. Remove mill scale and rust to comply with SSPC-SP 5 (White Metal Blast Cleaning) or SSPC-SP 8 (Pickling).

2. Factory Priming for Field-Painted Finish: Apply shop primer that complies with ANSI/SDI A250.10 acceptance criteria, is compatible with field finish paint systems indicated hereinafter in Part 3, Execution, and has capability to provide a sound foundation for field-applied topcoats. Apply primer immediately after surface preparation and pretreatment.

2.03 HARDWARE

A. Hardware for doors and frames shall be as shown in the Door Schedule and as specified in Section 08 71 00, FINISH HARDWARE.

2.04 MISCELLANEOUS ACCESSORIES

A. Head Reinforcing: Where installed in masonry, leave vertical mullions in frames open at top for grouting.

B. Jamb Anchors: Furnish jamb anchors as required to secure frames to adjacent construction, formed of not less than 18-gauge galvanized steel. Furnish at least three anchors per jamb up to 7-foot, 6-inches height; four anchors up to 8-foot, 0-inches jamb height; one additional anchor for each 24 inches or fraction thereof over 8-foot, 0-inches height.

C. Masonry Construction Anchors: Adjustable, flat corrugated, or perforated, T-shaped to suit frame size, with leg not less than 2 inches wide by 10 inches long.

D. In-Place Concrete or Masonry Bolts: Anchor frame jambs with minimum 3/8-inch concealed bolts into expansion shields or inserts at 6 inches from top and bottom and 26 inches on center, unless otherwise shown. Reinforce frames at anchor locations. Except for fire-rated openings, apply removable stop to cover anchor bolts unless otherwise indicated.

E. Floor Anchors: Provide floor anchors for each jamb and mullion that extends to floor, formed of not less than 14-gauge galvanized steel sheet, as follows:

1. Monolithic Concrete Slabs: Clip-type anchors, with 2 holes to receive fasteners, welded to bottom of jambs and mullions.

F. Head Anchors: Provide two anchors at head of frames exceeding 42 inches wide for frames mounted in steel stud walls.

G. Head Strut Supports: Provide 3/8-inch by 2-inch vertical steel struts extending from top of frame at each jamb to supporting construction above, unless frame is anchored to masonry or to other structural support at each jamb. Bend top of struts to provide flush contact for securing to supporting construction above. Provide adjustable wedged or bolted anchorage to frame jamb members in compliance with UL 10B.

H. Structural Reinforcing Members: Provide as part of frame assembly, where indicated at mullions, transoms, or other locations that are to be built into frame.

I. Head Reinforcing: For frames over 4-foot, 0-inches wide in masonry wall openings, provide continuous steel channel or angle stiffener, not less than 12 gauge for full width of opening, welded to back of frame at head.

J. Spreader Bars: Provide removable spreader bar across bottom of frames, tack welded to jambs and mullions.

PART 3 EXECUTION

3.01 DELIVERY, STORAGE, AND HANDLING

A. Deliver doors and frames, cartoned or packaged, to prevent damage and deterioration.

1. Properly identify each item.

2. Provide cardboard, separators, banding, spreaders, and paper wrappings to protect units from damage during and after installation.

3. Accept frames and doors on-site in manufacturer's packaging. Inspect for damage. Replace damaged units with new, undamaged units.

B. Store doors upright, in protected dry area, at least 1-inch off ground or floor and at least 1/4-inch between individual pieces.

1. Follow special storage and handling requirements of manufacturer.

2. Protect exposed finish surfaces of prefinished items with masking tape.

3.02 EXAMINATION

A. Examine surfaces and structures to receive the work of this section. Verify that structure walls, floors, openings and other similar items affecting the work in this section are in place and positioned correctly. Do not proceed until unsuitable conditions have been corrected. Starting work constitutes acceptance of conditions as suitable to the proper execution of the work.

B. Take measurements at the site and fabricate work to suit. Verify that field measurements are as indicated on shop drawings, and opening sizes and tolerances are acceptable. No changes will be made in the structure to accommodate this work.

3.03 DOOR AND FRAME INSTALLATION

A. General: Install steel doors, frames, and accessories according to shop drawings, manufacturer's data, and as specified. Coordinate with masonry, concrete, and/or gypsum board wall construction for anchor placement.

B. Placing Frames: Comply with provisions of ANSI/SDI A250.8 and A250.11, unless otherwise indicated. Set frames accurately in position, plumbed, aligned, and braced securely until permanent anchors are set.

1. Maintain scheduled dimensions, hold head level, and maintain jambs plumb and square. Secure anchorages and connections to adjacent construction. Wherever possible, leave frame spreader bars intact until frames are set perfectly square and plumb and anchors are securely attached.

2. Except for frames located in existing concrete, masonry, or gypsum board assembly construction, place welded-up frames before constructing enclosing walls and ceilings.

3. In masonry or concrete construction, backfill frames with mortar. Coat inside of frames with corrosion inhibiting bituminous material. For frames in exterior walls, ensure that stops are filled with rigid insulation before grout is placed.

4. Install at least one floor anchor and three anchors per jamb adjacent to hinge location on hinge jamb and at corresponding heights on strike jamb.

C. Door Installation: Fit hollow-metal doors accurately in frames, within clearances specified in ANSI/SDI A250.8.

1. Adjust doors for smooth and balanced door movement.

D. Prime Coat Touch-up: Immediately after erection, sand smooth any rusted or damaged areas of prime coat and apply touch-up of compatible air-drying primer.

E. Protection Removal: Immediately before final field painting, remove protective wrappings from doors and frames.

3.04 FIELD PAINTING

A. Where prime coat has been damaged, sand smooth and touch up with same primer as applied at shop.

1. Remove rust before painting.

2. Touch Up: Not obvious.

3. Perform immediately after door and frame installation.

B. Final paint coat shall be as specified in Section 09 90 00, PAINTING per System No. 5 and 6. Color shall be as indicated on the Drawings, or as selected by the Owner and Engineer from the Contractor provided shop drawings.

3.05 PROTECTION AND CLEANING

A. Protect installed doors and frames against damage from other construction work. Repair damaged doors and frames prior to completion of all work, or replace with new as directed by the Owner or Engineer.

B. Upon completion and before final acceptance, clean exposed surfaces of doors and frames thoroughly. Remove any smears and other unsightly marks.

3.06 SCHEDULES

A. For tabulation of door and frame characteristics, such as size, type, detail, and finish hardware requirements, see the schedules on the Drawings.

END OF SECTION 08 11 13

PART 1 GENERAL

1.01 SECTION INCLUDES

A. Overhead coiling doors, operating hardware, exterior, manual and electric operation.

B. Wiring from electric circuit disconnect to operator to control station.

1.02 RELATED SECTIONS

A. Division 26 – ELECTRICAL.

1.03 REFERENCE STANDARDS

A. ASTM A36/A36M- Standard Specification for Carbon Structural Steel; 2008.

B. ASTM A123/A123M- Standard Specification for Zinc (Hot-Dip Galvanized) Coatings on Iron and Steel Products; 2012.

C. ASTM A653/A653M- Standard Specification for Steel Sheet, Zinc-Coated (Galvanized) or Zinc-Iron Alloy-Coated (Galvannealed) by the Hot-Dip Process; 2011.

D. NEMA 250 - Enclosures for Electrical Equipment (1000 Volts Maximum}; National Electrical Manufacturers Association; 2008.

E. NEMA ICS 2- Industrial Control and Systems: Controllers, Contactors, and Overload Relays, Rated Not More Than 2000 Volts AC or 750 Volts DC; National Electrical Manufacturers Association; 2000 (R2005).

F. NEMA MG 1 - Motors and Generators; National Electrical Manufacturers Association; 2011.

G. UL (EAUED)- Electrical Appliance and Utilization Equipment Directory; Underwriters Laboratories Inc.; current edition.

1.04 SUBMITTALS

A. See Section 01 33 00, SUBMITTALS, for submittal procedures.

B. Shop Drawings: Indicate pertinent dimensioning, anchorage methods, hardware locations, and installation details.

C. Manufacturer's Instructions: Indicate installation sequence and procedures, adjustment and alignment procedures.

D. Maintenance Data: Indicate lubrication requirements and frequency and periodic adjustments required.

1.05 QUALITY ASSURANCE

A. Products Requiring Electrical Connection: Listed and classified by Underwriters Laboratories Inc.as suitable for the purpose specified and indicated.

PART 2 PRODUCTS

2.01 MANUFACTURERS

A. Insulated Overhead Coiling Doors:

1. Wayne-Dalton, a Division of Overhead Door Corporation; Product 800C: www.wayne-dalton.com.

2. Or approved equal.

2.02 COILING DOORS

A. Exterior Coiling Doors: Steel slat curtain.

1. Capable of withstanding positive and negative wind loads of 30 psf without undue deflection or damage to components.

2. Sandwich slat construction with insulated core of polyurethane type insulation; insulation {u-) value: 0.15 R= 6.7.

3. Finish: Factory painted, color to be selected by Owner. Kynar or powder coating per Manufacturer's requirements.

4. Guides: Angles; galvanized steel.

5. Hood Enclosure: 24 Ga.,ptd. Color per Owner selection; galvanized steel. Flanged at top for attachment to header and flanged at bottom to provide longitudinal stiffness.

6. Electric operation with auxiliary hand chain. 30 # maximum pull.

7. Mounting: Face of wall mounting. Bracket mounted power unit.

2.03 MATERIALS

A. Curtain Construction: Interlocking slats.

1. Slat Ends: Each slat fitted with end locks to act as wearing surface in guides and to prevent lateral movement

2. Curtain Bottom: Fitted with steel angles with astragal to provide reinforcement and positive contact in closed position.

3. Weather-stripping: Moisture and rot proof, resilient type, located at jamb edges, bottom of curtain, and where curtain enter hood enclosure of exterior doors

B. Steel Slats: Minimum 24 Ga (mm) ASTM A653/A653M galvanized steel sheet.

C. Guide Construction: Continuous, of profile to retain door in place with snap-on trim, mounting brackets of same metal.

D. Steel Guides: ASTM A36/A36M steel angles, size as indicated, hot-dip galvanized per ASTM A 123/A 123M.

E. Hood Enclosure: Internally reinforced to maintain rigidity and shape.

1. Minimum 24 Ga.

2. Factory painted per Coating System No. 5 per SECTION 09 90 00

F. Roller Shaft Counterbalance: Steel pipe and helical steelspring system, oil tempered torsion type, capable of producing torque sufficient to ensure smooth operation of curtain from any position and capable of holding position at mid-travel; with adjustable spring tension; requiring not more than 30 lb nominal force to operate.

2.04 ELECTRIC OPERATION

A. Electric Operators:

1. Mounting: Bracket mounted.

2. Motor Enclosure: Refer to Electrical Drawings for required NEMA classifications.

3. Motor Rating: Minimum 1/2 hp (375 W), continuous duty rated for the door size indicated on the Drawings. Note that Door 4-103A requires a 3/4 hp motor.

4. Motor Voltage: 120 volt, single phase, 60 Hz.

5. Motor Controller: NEMA ICS 2, full voltage, reversing magnetic motor starter.

6. Controller Enclosure: Refer to Electrical Drawings for required NEMA classifications.

7. Opening Speed: 12 inches per second (300 mm/s).

8. Brake: Adjustable friction clutch type, activated by motor controller.

9. Manual override in case of power failure.

B. Control Station: Standard three button (OPEN-STOP-CLOSE) momentary control for each operator.

1. 24 volt circuit.

C. Safety Edge: Located at bottom of curtain, full width, electro-mechanical sensitized type, wired to stop operator upon striking object, hollow neoprene covered.

PART 3 EXECUTION

3.01 EXAMINATION

A. Verify that opening sizes, tolerances and conditions are acceptable.

3.02 INSTALLATION

A. Install units in accordance with Manufacturer's instructions.

B. Use anchorage devices to securely fasten assembly to wall construction and building framing without distortion or stress.

C. Securely and rigidly brace components suspended from structure. Secure guides to structural members only.

D. Fit and align assembly including hardware; level and plumb, to provide smooth operation.

E. Coordinate installation of electrical service with the Division 26 Contractor.

F. Complete wiring from disconnect to unit components.

3.03 TOLERANCES

A. Maintain dimensional tolerances and alignment with adjacent work.

B. Maximum Variation From Plumb: 1/16 inch (1.5 mm).

C. Maximum Variation From Level: 1/16 inch (1.5 mm).

D. Longitudinal or Diagonal Warp: Plus or minus 1/8 inch per 10ft (3 mm per 3 m) straight edge.

3.04 ADJUSTING

A. Adjust operating assemblies for smooth and noiseless operation.

3.05 CLEANING

A. Clean installed components.

B. Remove labels and visible markings.

END OF SECTION 08 33 23

(This page intentionally left blank)

PART 1 GENERAL

1.01 WORK INCLUDED

A. This section includes the work necessary to furnish and install, complete, the finish hardware for the following types of doors:

1. Interior and exterior hollow metal doors; Section 08 11 13, STANDARD STEEL DOORS AND FRAMES.

B. Keying and keys shall include and coordinate with the system on the existing Section 10 WRP and buildings. Contractor to coordinate new finish hardware with Owner's existing finish hardware to provide equipment that is compatible and may supersede what is listed in this specification with Owner approval.

C. Provide items of finish hardware as indicated in the hardware sets in Part 2, PRODUCTS of this section.

1.02 GENERAL REQUIREMENTS

A. See the GENERAL CONDITIONS and Division 01 00 00, GENERAL REQUIREMENTS, which contain information and requirements that apply to the work specified herein and are mandatory for this project.

1.03 SUBMITTALS

A. Submit manufacturer's catalog data and cut sheets for each item of hardware in accordance with Section 01 33 00, SUBMITTALS.

B. Submit complete and detailed vertical format hardware schedule in accordance with Door and Hardware Institute (DHI) published format.

C. Supplier shall consult with the Engineer/Owner to prepare and submit a keying schedule in accordance with the DHI publication "Keying Systems and Nomenclature".

D. Upon return of an approved hardware submittal, supplier shall provide templates of each type hardware necessary to prepare doors and frames.

E. Submittal Sequence: Submit final schedule at earliest possible date particularly where acceptance of hardware schedule must precede fabrication of other work that is critical in the Project construction schedule. Include with schedule the product data, samples, Shop Drawings of other work affected by door hardware, and other information essential to the coordinated review of schedule.

1.04 REFERENCES AND QUALITY ASSURANCE

A. Provide only hardware as specified or approved as equal in this specification.

B. The following publications are referenced and made part of this section:

1. Door and Hardware Institute (DHI) Publications:

a. Keying Systems and Nomenclature.
b. Recommended Locations for Builders Hardware for Standard Steel Doors and Frames.

2. American National Standards Institute/Builders Hardware Manufacturers Association (ANSI/BHMA) Standards and Publications:

a. ANSI/BHMA A156.1 "Butts and Hinges"
b. ANSI/BHMA A156.2 "Bored and Preassembled Locks and Latches"
c. ANSI/BHMA A156.3 "Exit Devices"
d. ANSI/BHMA A 156.4 "Door Controls - Closers"
e. ANSI/BHMA A156.5 "Cylinders and Input Devices for Locks"
f. ANSI/BHMA A156.6 "Architectural Door Trim"
g. ANSI/BHMA A156.7 "Template Hinge Dimensions"
h. ANSI/BHMA A156.8 "Door Controls – Overhead Stops and Holders”
i. ANSI/BHMA A156.13 "Mortise Locks and Latches"
j. ANSI/BHMA A156.16 "Auxiliary Hardware"
k. ANSI/BHMA A156.18 "Materials and Finishes"
l. ANSI/BHMA A156.21 "Thresholds"
m. ANSI/BHMA A 156.22 "Door Gasketing and Edge Seal Systems"

C. Other references included in this section shall also be complied with, as applicable.

D. Supplier Qualifications: A recognized architectural door hardware supplier, with warehousing facilities in the Project's vicinity, that has a record of successful in-service performance for supplying door hardware similar in quantity, type, and quality to that indicated for this Project and that employs an experienced Architectural Hardware Consultant (AHC) who is available at reasonable times during the course of the work, for consultation about Project’s hardware requirements.

1.05 MAINTENANCE

A. Within 20 days prior to substantial completion, adjust all hardware and doors for proper latching, sealing and closing speed.

B. Provide Operation and Maintenance (O&M) Manuals for products furnished in this section, as specified in Section 01 77 00, CONTRACT CLOSEOUT.

1.06 WARRANTY

A. Furnish a written guarantee which shall cover the periods stated below from and after the completion of the building and its acceptance by the Owner. Hardware failing to comply with warranty shall be removed and replaced with new material including labor at no cost to Owner. Provide the following special warranties starting from the date of substantial completion:

1. Door Locksets and Closers: Five years.

PART 2 PRODUCTS

2.01 GENERAL

A. The use of a manufacturer's name and model or catalog number is for establishing the standard of quality and general configuration desired only. In the hardware group descriptions hereinafter, product model numbers are used as part of this description to assist in identifying individual items. Products of other manufacturers will be considered in accordance with the General Conditions.

B. Insofar as practical, all hardware provided hereunder shall be the end products of one manufacturer to achieve standardization for appearance, operation, maintenance, spare parts, and manufacturer's service.

C. Provide items not specifically mentioned but necessary to complete the work. Match similar items in quality and finish.

D. Note that some types of hardware groups/sets listed hereinafter may not be used on this project. Coordinate with the Door Schedule referenced in Part 3, EXECUTION of this section.

2.02 FINISH HARDWARE MATERIALS

A. Approved Manufacturers:

1.	Hinges (ANSI/BHMA A156.1)	Hager 1191 Series Stanley FBB191 Series McKinney T2314 Series
2.	Locks (ANSI/BHMA A156.2 and A156.13)	Yale 5400 Series Schlage D Series Corbin/Russwin CK4300 Series
	All locks shall have interchangeable core cylinders of Grade 1 products with 6- or 7-pin tumblers.	
3.	Closers (ANSI/BHMA A156.4)	Yale 4400S Series LCN 4010 Series SRI Norton 7500 Series with AL finish on covers
4.	Exits (ANSI/BHMA A156.3)	Yale 7000 Series Corbin/Russwin ED4000 Von Duprin 35A Series
5.	Trim (ANSI/BHMA A156.16)	Trimco Ives Glynn Johnson
6.	Weatherstrip and Thresholds	Pemko Reese National Guard

B. Materials and Finishes: Comply with ANSI/BHMA A156.18. Pay particular attention to the requirements for corrosion resistant (stainless steel) locks, including chassis, corrosion resistant closers, and stainless steel thresholds, etc. All fasteners shall be stainless steel.

1. Typical Exterior Exposed, Interior Humid and Corrosive Areas Door Hinges and Hardware: Satin finished stainless steel – comply with BHMA 630.

2. Closers: Finish appearance to match door hardware on same face of door.

3. Thresholds: Finish appearance to match door hardware on exterior face of door.

4. Other Items: Furnish manufacturer's standard finishes to match similar hardware types on same door, and maintain acceptable finish considering anticipated use and BHMA category of finish.

C. Keys and Keying: Keys and keying shall be coordinated with Owner and match their requirements if different. Provided with a new 6- or 7-pin, grand masterkey (GMK) system as follows:

1. Construction key each lock and cylinder. Contractor's Option: Contractor may provide temporary locks on secure doors during construction and replace them with the permanent locksets upon completion of the project.

2. Provide 3 change keys per lock or provide 6 change keys per keyed-alike group.

3. Provide 3 GMK and 3 MK per each master keyed group.

4. Establish visual key control.

5. Stamp keys "Do Not Duplicate".

6. Provide key system in keyway which is restricted by the manufacturer from general distribution.

D. Special Tools: Provide two sets of special tools (such as spanner and socket wenches, dogging keys, etc.) for installation and maintenance of hardware. Deliver to the Owner at substantial completion.

E. Templates: Fabricate to template all hardware applied to metal or pre-finished doors and frames. Ensure that required templates are provided to the various manufacturers for fabrication purposes and that templates are available not more than 10 working days after receipt of approved Hardware Schedule.

F. Exit Doors: Always operable from the inside by the simple turn of a knob or push on a panic bar without the use of a key or any special knowledge or effort, to include each leaf of door pairs.

G. Butt Hinges: Unless otherwise scheduled, shall be five-knuckle, full mortise template, 4-1/2-inch by 4-1/2-inch ball bearing type with non-rising loose pin, flat button tip. Exterior hinges, and certain others as scheduled, shall have non-removable pins by use of set screw in the barrel. These are identified in the schedule as "NRP".

I. Locks and Latches: Locks shall utilize standard cutouts to facilitate interchange without further mortising. Strikes for locks and latches shall

have only the minimum lip projection required to protect trim. Lock and trim shall conform to ANSI/BHMA A156.2, Series 4000, Grade 1 for bored cylindrical locksets and A156.13, Series 1000, Grade 1 for mortise locksets.

J. Exit Devices: Shall be listed under "Panic Hardware" in accident equipment lists of Underwriters Laboratories. Exit devices shall conform to ANSI/BHMA A156.3, Grade 1, and shall comply with the accessibility requirements of the ADA.

K. Door Closers: Except where other device for automatically closing and controlling the action of swing doors is noted, shall be liquid type of rack and pinion design with working parts enclosed in a cast iron case. For doors subject to positive or negative HVAC pressures, closer size shall be adjusted accordingly and where required shall comply with the accessibility requirements of the ADA.

1. Materials and Features:

a. ANSI /BHMA A156.4, Grade 1.
b. ICC/ANSI A117.1.
c. UL listed. Provide closers for fire rated openings in compliance with NFPA 80, NFPA 101, and local building codes.
d. Provide modern closers with full covers.
e. Extreme temperature fluid (temperature range from -30 degrees F to 120 degrees F).
f. Provide delayed action closers where required by code.
g. Provide sex nuts and bolts (SNB) or through bolts (TB) on all labeled mineral core doors.
h. Finish: Provide factory painted or powder finish on exposed metal to match hardware, unless indicated otherwise.
i. Mounting: Hinge face mounting, unless otherwise indicated. Do not mount closers on exterior of building.
j. Size and mount units indicated or, if not indicated, to comply with manufacturer's recommendations for exposure conditions. Reinforce substrate as recommended.
k. Closers to be installed to allow door swing as shown on Drawings.
l. Door Pull Force: Exterior doors shall be maximum 8.5 pounds, interior doors shall be maximum 5.0 pounds, and fire rated doors shall be maximum 15 pounds. Provide mounting or drop plates as required by job conditions.

L. Door Stops: Wall type door bumpers shall be in accordance with ANSI/BHMA A156.16 and provided for all openings where conditions

permit. In the event a wall type bumper cannot be used, a standard type floor stop shall be provided.

1. Door Stop Mounting: Methods to suit substrates encountered (plastic anchor, drywall anchor, expansion shield, etc.).

2. Provide blocking in all gypsum board partitions at all wall stop locations.

3. Provide gray rubber exposed resilient parts.

4. Do not furnish aluminum floor stops.

5. Adjust height of floor stops to suit undercut of adjacent door.

M. Thresholds at all doors usable by the handicapped shall not exceed ½-inch in height above finished floor with a maximum slope of 1:2 in accordance with ADA, and shall be in accordance with ANSI/BHMA 156.21.

N. Protective Plates and Trim: Materials: Protection plates conforming to ANSI/BHMA 156.6, .050-inch minimum thickness, beveled edges (B4E) four sides. Mount centered, 1-inch up from bottom of door. Screws: Phillips head sheet metal screws plated to match plate.

O. Silencers for Metal Door Frames: ANSI/BHMA 156.16 Grade 1; neoprene or rubber, minimum diameter 1/2-inch; fabricated for drilled application to frame. Color – gray.

P. Weatherstripping: Continuous at top and sides of exterior doors; comply with ANSI/BHMA A156.22. Air leakage of weatherstripped doors shall not exceed 1.25 cfm/square foot of door area when tested in accordance with ASTM E283.

2.03 MISCELLANEOUS REQUIREMENTS

A. The hardware shall be the proper kind for its required use and shall fit its intended location. Should any hardware, as specified, fail to meet the intended requirements or require modification to suit the intended location, this matter or any other necessary advance information shall be brought to the attention of the Engineer/Architect for correction or decision in ample time to avoid delay in the manufacture and delivery of hardware.

B. The finish hardware listed herein shall not be construed as necessarily being a complete hardware schedule, but shall be considered as an indication of the hardware requirements desired by the Engineer/Architect. It shall be the Contractor's responsibility to examine the Drawings and door schedules and provide all necessary or additional hardware as required but

not scheduled herein. Such items of hardware shall be of the same type, quality, and quantity as that scheduled for similar doors or similar purposes.

C. In the accompanying hardware list hereinafter, catalog numbers used are those of specific manufacturers, used to establish a minimum standard of quality and requirements as to type, weight, mechanical construction and operation to which hardware shall conform.

2.04 HARDWARE GROUP SETS

A. Hardware Groups: NOTE: Due to the corrosive nature of some areas of the building, Hardware Groups are all stainless steel items.

1. Hardware Group 1:
Exterior Single - Non-rated

Doors MD-1, MD-2, MD-3, MD-4

3ea	HAG	Hinges	BB1191 x 4.5 x 4.5 x NRP US32D
1ea	YAL	Lockset	5405 x CA x 630
1ea	YAL	Cylinder	1109/5109 x 630
1ea	YAL	Closer	4400SS x 689 x SNB
1ea	TRI	Kickplate	K0038 10 x 1 1/2LDW x 630
1ea	PEM	Seal	303AS x perimeter
1ea	PEM	Dr. Bottom	321SSN x width of opening
1ea	PEM	Threshold	175SS x width of opening

14. Hardware Group 2:
Exterior Pair – Non-rated

Door FF-5, FF-8: 7’-0” x 8’-8”

8ea	HAG	Hinges	BB1191 x 4.5 x 4.5 x NRP x US32D
1ea	YAL	Lockset	5405 x CA x 630
2ea	YAL	O.H. Stop	130S US32D
1pr	TRI	Flush Bolt	3915 x US32D
1ea	TRI	Dust Proof Strike	3910 x US32D
1ea	PEM	Astragal	357SS x S44D x Height of opening x active leaf
1ea	PEM	Seal	303AS x perimeter
2ea	PEM	Door Bottom	321 SSN x Width of opening
1ea	PEM	Threshold	175 SS x Width of opening

PART 3 EXECUTION

3.01 PRODUCT STORAGE AND HANDLING

A. Manufacturer shall clearly identify and tag each item of hardware with respect to specified description and location of installation, referenced to door numbers.

B. Immediately upon receipt, provide locked storage area specifically dedicated to items specified in this section until installation is made. Protect materials form moisture and dust by storing in a clean, dry location away for other construction operation areas.

C. Check on all items of hardware within 10 days of receipt, with installer present, and immediately notify supplier of any shortages.

3.02 EXAMINATION

A. Verify that doors and frames are ready to receive work, dimensions are as indicated on Shop Drawings, and all other work conditions are ready as instructed by the manufacturer.

B. Beginning of installation means acceptance of existing conditions.

3.03 INSTALLATION

A. Install all hardware in accordance with manufacturer's written instructions and recommendations. Wherever cutting and fitting is required to install hardware onto or into surfaces which are later to be painted or finished in another way, install each item completely and then remove and store in a secure place during the finish application. After completion of the finishes, reinstall each item. Do not install surface-mounted items until finishes have been completed on the substrate.

B. Make work neat and secure, develop full strength of components, and provide proper function. Set units level, plumb, and true to line and location. Adjust and reinforce the attachment substrate as necessary for proper installation and operation. Drill and countersink units that are not factory-prepared for anchorage fasteners. Space fasteners and anchors in accordance with industry standards.

C. Prevent marring, scratching, or otherwise damaging adjacent finishes during hardware installation.

D. Latchbolts: Install to engage in strikes automatically, whether activated by closers or manually. In no case shall additional manual pressure be required to engage latchbolt in strike.

E. Stops and Holders: Set to allow doors to open as far as possible.

F. Wall Mounted Hardware: Install over solid structural backing or solid blocking in hollow walls.

G. Thresholds:

1. Extend thresholds full width of the door opening and cope ends neatly to profile of jamb.

2. Set in sealant and seal ends to jambs, and anchor to floor with countersunk stainless steel screws. Set thresholds for exterior doors in full bed of butyl-rubber or polyisobutylene mastic sealant complying with requirements specified in Section 07 90 00, CAULKING AND SEALANTS.

H. Hardware: Adjust for easy, noise-free operation.

I. Fastenings shall be of suitable size, quantity, and material with finish to match the hardware in accordance with commercially recognized industry standards for the intended use.

1. Machine screws for attaching hardware to metal.

2. Self-tapping screws for attaching kickplate to hollow metal or wood mineral core doors.

3. Full thread type screws for attaching butt hinges to wood or mineral core doors.

4. Sex bolts and sleeves for attaching surface closers or arm to mineral core doors.

5. Non-ferrous or corrosion resistant steel fasteners for items exposed to weather.

J. Weatherstripping and Seals: Comply with the manufacturer’s instructions and recommendations to the extent installation requirements are not otherwise indicated. Provide full contact, weather-tight seals that allow operation of doors without binding the weatherstripping.

K. Replace damaged hardware items.

3.04 MOUNTING LOCATIONS/DIMENSIONS

A. Standard Door Hardware Locations: As recommended and published by the Door and Hardware Institute and ADA, except as noted or detailed otherwise. If not shown otherwise, hardware mounting heights shall conform to the following:

1. Hinges: Top at 5 inches from head to top of hinge leaf; bottom at 10 inches from bottom of hinge leaf to finished floor; Intermediates at equal distance between top and bottom hinges with a maximum of 3.0 feet, 0 inches.

2. Locksets/Latches: 38 inches from finish floor to center of lock/latch.

3. Doorpulls, Pushplates, and Pushbars: 42 inches from finish floor to centerline.

4. Exit Device Crossbars: 38 inches from finish floor to center of cross bar.

B. Door Silencers: Install 3 inches from top and bottom of jamb and 2 inches above strike at single doors, and 3 inches from edges of doors in head for pairs of doors.

C. Nameplates: Attach to doors or walls adjacent to doors 5 feet 6 inches off floor using Phillips head screws. See Section 10 14 00, IDENTIFYING DEVICES.

3.05 MANUFACTURERS' REPRESENTATIVE'S SERVICES

A. Deliver all permanent lock cores to the jobsite. Remove all temporary construction cores and insert permanent cores.

B. Operate all locksets with Change Keys in presence of Owner's Representative to ensure construction keys are made inactive.

C. Inspect each lock set to ensure all permanent cores are operating satisfactorily.

D. Deliver to Owner directly all change and control keys for the permanent system.

E. Return all temporary construction cores to the manufacturer.

F. Instruct Owner's personnel in the proper adjustment and maintenance of door hardware and hardware finishes.

3.06 PROTECTION

A. Cover and protect exposed surfaces of hardware during installation and until substantial completion. Do not remove manufacturer's protective covering of flat items such as kickplates and push plates until just prior to final acceptance of the building.

B. Fit, dismantle, and reinstall finish hardware as required for finish painting work.

C. Protect and prevent staining of hardware during construction in accordance with manufacturer’s recommendations.

D. Remove protective measures and permanent lock cylinders installed prior to final cleaning.

3.07 MAINTENANCE AND ADJUSTING

A. Within 20 days prior to substantial completion, adjust all hardware and doors for proper latching, sealing and closing speed. Replace units that cannot be adjusted to operate freely and smoothly or as intended for the application made.

B. Provide Operation and Maintenance Manuals for products furnished in this section.

3.08 DOOR AND HARDWARE SCHEDULE

A. Provide hardware complete. All exterior doors shall be weathertight and all trim and hardware accessories shall be provided to ensure weathertightness, even if not specifically called for in the schedule.

1. H1

a. 3 pair hinges
b. 2 panic bars
c. 2 closers – extra heavy-duty arm w/hold open
d. 1 continuous threshold
e. 2 cylindrical lever lockset – entry function
f. 2 automatic flushbolts, concealed
g. 2 automatic drop bottoms
h. 1 set weather stripping
i. 1 astragal

2. H2

a. 1 ½ pair hinges

b. 1 cylindrical lever lockset – entry function
c. 1 wall stop
d. 1 set of silencers

3. H3

a. 1 ½ pair hinges
b. 1 panic bar
c. 1 cylindrical lever lockset – passage function
d. 1 wall stop
e. 1 closer – extra heavy-duty arm w/hold open

4. H4

a. 1 coiling door hardware kit by manufacturer
b. 2 electrical door openers by manufacturer

END OF SECTION 08 71 00

(This page intentionally left blank)

PART 1 GENERAL

1.01 WORK INCLUDED

A. This section includes the work required to furnish and install, complete, glass and glazing for window units.

1.02 GENERAL REQUIREMENTS

A. See the GENERAL CONDITIONS and Division 01 00 00, GENERAL REQUIREMENTS, which contain information and requirements that apply to the work specified herein and are mandatory for this project.

1.03 SUBMITTALS

A. Shop Drawings and other submittals shall be furnished in accordance with Section 01 33 00, SUBMITTALS for the following prior to delivery or fabrications:

1. Complete schedule of glass and glazing material to be used for each purpose. Provide structural, physical, thermal, solar, and environmental characteristics; size limitations; and special handling or installation requirements.

2. Details of methods of glazing for each type of glazing condition.

3. Catalog cuts of glazing materials with inclusion of glass edge cutting procedures. Provide chemical, functional, and environmental characteristics, limitations, and special application requirements. Identify available colors where exposed.

4. Certificates of compliance from glass and glazing materials manufacturer.

1.04 QUALIFICATIONS AND REFERENCE STANDARDS

A. Furnish the following proof of glazier's ability to perform the work as outlined in this section:

1. Glazier shall have previous experience in installation of equal size and requirements which can be inspected by the Engineer/Owner.

2. Glazier shall meet the approval of glass and framing manufacturer(s).

B. Glazing Standard: Comply with Glass Association of North America (GANA) "Glazing Manual", "Sealant Manual", “Engineering Standards Manual”, and “Laminated Glazing Reference Manual”.

C. Safety Glazing Standard: Comply with American National Standards Institute (ANSI) Z97.1 “Safety Glazing Materials Used in Buildings – Safety Performance Specifications and Methods of Test” and testing requirements of Consumer Product Safety Commission (CPSC) 16 CFR Part 1201 “Safety Standard for Architectural Glazing Materials” for Category II materials.

D. Fire Resistance Rated Wire Glass: Provide UL-labeled and listed products, identical with those tested per ASTM E119. Comply with NFPA 80 “Standard for Fire Doors and Other Opening Protectives”.

E. Insulating Glass Certification Program: Provide insulating glass units complying with requirements indicated which are permanently marked with certification label of at least one of the following inspecting and testing agencies:

1. Insulating Glass Certification Council (IGCC).

2. Insulating Glass Manufacturers Alliance (IGMA).

F. ASTM International:

1. ASTM C864 - Standard Specification for Dense Elastomeric Compression Seal Gaskets, Setting Blocks, and Spacers.

2. ASTM C920 - Standard Specification for Elastomeric Joint Sealants.

3. ASTM C1036 - Standard Specification for Flat Glass.

4. ASTM C1048 - Standard Specification for Heat Strengthened and Fully Tempered Flat Glass.

5. ASTM C1172 - Standard Specification for Laminated Architectural Flat Glass.

6. ASTM E84 - Standard Test Method for Surface Burning Characteristics of Building Materials.

7. ASTM E119 - Standard Test Methods for Fire Tests of Building Construction and Materials.

8. ASTM E1300 - Standard Practice for Determining Load Resistance of Glass in Buildings.

9. ASTM E2190 - Standard Specification for Insulating Glass Unit Performance and Evaluation.

1.05 WARRANTY/GUARANTEE

A. Furnish a joint warranty/guarantee signed by Contractor, glazing installer, and window frame manufacturer giving assurance against leakage of water into the interior surfaces of the building caused by defective materials or workmanship for all work installed under this section of the Specifications.

1. Warranty Period: Five years from the date of Substantial Completion.

B. In the event leakage occurs, without cost to the Owner, furnish all labor and material, including replacement of finishes, required to investigate and correct such condition.

PART 2 PRODUCTS

2.01 GENERAL

A. The use of a manufacturer's name and model or catalog number is for establishing the standard of quality and general configuration desired only. Products of other manufacturers will be considered in accordance with the General Conditions.

B. All glass and glazing provided hereunder shall be the end products of one manufacturer to achieve standardization for appearance, operation, maintenance, and manufacturer's service.

C. Fabricate and install watertight and airtight glazing systems to withstand thermal movement and wind loading without glass breakage, gasket failure, deterioration of glazing accessories, or defects in the work. Glazed panels shall comply with safety standards per ANSI Z97.1 where noted and with indicated wind/snow loading in accordance with ASTM E1300.

2.02 MATERIALS

A. Glass Manufacturers: Subject to compliance with requirements, provide products by one of the following:

1. Cardinal Glass Industries.

2. Pilkington North America.

3. Vitro Architectural Glass.

4. National Guard Products.

5. ASG Glass Fabricators.

6. Or equal.

B. Sizes: Fabricate glass of thicknesses indicated or required, and to sizes required for glazing openings indicated, with edge clearances and tolerances complying with recommendations of glass manufacturer.

C. Structural Design Criteria for Exterior Assemblies: Select type and thickness to withstand dead loads and wind loads acting normal to plane of glass at design pressures calculated in accordance with the appropriate IBC code referenced on the Drawings.

1. Use the procedure specified in ASTM E1300 to determine glass type and thickness.

2. Thicknesses listed hereinafter are minimum.

D. General Glass Requirements: Factory label glass; nonlabelled glass will be rejected.

E. Uncoated Heat-Treated Safety Glass Products: Comply with ASTM C1048 and with manufacturing process indicated for the following:

1. Tempered Float Safety Glass: Clear transparent flat, Kind FT fully tempered, Condition A uncoated float glass, Type I, Class 1, Glazing Quality Q3, ¼-inch minimum thickness.

2. Comply with CPSC 16 CFR 1201 test requirements for Category II where safety glass is indicated in related specification sections, or required by applicable code.

F. Wire Glass: ASTM C1036, Clear Polished, Type II, Class 1, Glazing Quality Q6 and Q8, Form 1, UL approved complying with ANSI Z97.1; ¼-inch minimum thickness; with 0.020-inch diameter welded woven stainless steel wire embedded in glass of mesh indicated below:

1. Mesh M1 - diamond.

G. Glazing Sealant: Comply with sealant and glass manufacturers for selection of glass sealants which suit project application and installation conditions and which are compatible with surfaces contacted. Provide color of exposed sealants indicated.

1. Single Component Acid-Curing Silicone Glazing Sealant: ASTM C920; Type S; Grade NS; Class 25; Uses NT, G, A, and, as applicable to uses indicated, O; nonbleeding and nonstaining.

H. Cleaners, Primers and Sealers: Type recommended by manufacturer of sealants/gaskets.

I. Blocks and Spacers: Neoprene, EPDM, or silicone as required for compatibility with glazing sealants; of 80 to 90 Shore A hardness for setting blocks and, for spacers and edge blocks, of hardness recommended by glass and sealant manufacturer for application indicated. Comply with ASTM C864 Option I. Length of 0.1-inch for each square foot of glazing or minimum 4 inches by width of glazing rabbet space minus 1/16-inch by height to suit glazing method and pane weight and area.

J. Compressible Filler Rods/Gaskets: Closed-cell or waterproof-jacketed rod stock of synthetic rubber or plastic foam, 5 to 10 psi compression strength for 25 percent compression, complying with ASTM C509, Option I, Type II.

PART 3 EXECUTION

3.01 DELIVERY, STORAGE, AND HANDLING

A. Deliver glazing materials in manufacturer’s unopened labeled containers.

B. Storage:

1. Support cases on both sides when stored vertically.

2. After unpacking, place interleaving protection between lites.

3. Keep glass and interleaving dry by storing inside where temperatures are above dewpoint, or if outside storage is necessary, cover the glass interleaving with opaque tarpaulins or plastic and inspect periodically. Wet interleaving can stain glass.

4. Avoid exposing stored glass to direct sunlight.

C. Handling:

1. Stack individual lites on edge and lean them against sturdy uprights at a slope of 5 to 7 degrees from vertical.

2. Cushion the bottom edges with soft, firm pads free of dirt, grit, glass chips, or other foreign material.

3. Do not rotate or cartwheel insulating glass units over their corners. Use a turning device such as a rolling block if units must be rotated.

3.02 PREPARATION

A. Do not perform glazing work in damp, foggy, or rainy weather, or when temperatures are not within range recommended per reference standards. If there is any discrepancy, do not install glazing when ambient temperature is less than 50 degrees F. Maintain minimum ambient temperature before, during, and 24 hours after installation of glazing compounds.

B. Verify that openings for glazing are correctly sized and within tolerance. Verify that surfaces of glazing channels or recesses are clean, free of obstructions that may impede moisture movement, weeps are clear, and ready to receive glazing. Installation of materials will be considered evidence of glazier's acceptance of frames and surfaces as proper for glazing.

C. Surfaces: Smooth, even, sound, dry, and clean.

D. Priming: Complete and cured.

E. Measure size of frames to receive glass and compute actual glass size allowing for edge clearances.

F. Use tempered glass for all glazed openings noted as "Safety Glass".

3.03 GENERAL GLASS INSTALLATION (GLAZING)

A. General: Comply with referenced GANA standards and instructions of manufacturers of glass, glazing sealants, and gaskets, to achieve airtight and watertight performance, and to minimize breakage.

B. Protect glass from edge damage during handling and installation. Inspect glass during installation and discard pieces with edge damage that could affect glass performance.

C. Set units of glass in each series with uniformity of pattern, draw, bow and similar characteristics.

D. Protect glass from contact with contaminating substances resulting from construction operations; remove any such substances by method approved by glass manufacturer.

E. Wash glass on both faces not more than 4 days prior to date scheduled for substantial completion and final completion inspections. Wash glass by method recommended by glass manufacturer.

F. Follow recommendations of glass manufacturer, GANA Glazing Manual, GANA Sealant Manual, ASTM C1193, NFPA 80 (for fire rated openings), and the following:

1. Cutting:

a. Make concealed edges clean, straight cut, and free from chips and fissures.
b. Shop cut all glass. Nipping glass on job not allowed.
c. Allow for maximum grip on all edges.

2. Positioning Glass:

a. Set glass with equal bearing on entire width of pane.
b. Position sheets of glass with setting blocks.
c. Set tong marks of tempered glass at bottom of installed sheet.
d. Orient pattern and draw of glass pieces in same direction.
e. Place glass waves parallel to floor.
f. Set smooth side to exterior.

3. Glazing: In accordance with GANA Glazing Manual and window or frame and glass manufacturers' printed instructions.

4. Glass shall not move or rattle.

3.04 CLEANING

A. Leave glass and glazing in undamaged condition and ready for final cleaning.

B. Remove excess glazing compound from installed glass.

C. Remove labels from glass surface at time of final cleaning.

D. Wash and polish both faces of glass.

E. Remove debris from jobsite.

3.05 PROTECTION OF COMPLETED WORK

A. Protection:

1. Keep glass free from contamination by materials capable of staining glass.

2. Install tape across lites with an "X" secured to frames or structure using removable plastic tape.

3. At final completion, no tape or marking allowed on glass; do not mark heat absorbing or reflective glass units.

B. Replacements and Repairs: Prior to substantial completion, replace broken, defective, or scratched glass and repair damaged compounds.

END OF SECTION 08 80 00

PART 1 GENERAL

1.01 WORK INCLUDED

A. General: This section covers surface preparation, furnishing, and application of industrial and architectural paint and special protective coatings, complete.

B. The intention of these Specifications is for new interior and exterior masonry, concrete, metal, and submerged metal surfaces to be painted, whether specifically mentioned or not, except as specified otherwise. Prime and coat structural steel surfaces as specified. Provide a holiday-free monolithic coating membrane layer. Exterior and interior concrete surfaces will be painted as specified.

C. Prepare manufactured items and materials that are “factory” galvanized and/or coated as specified hereinafter for the exposure condition of the item an and for architectural purposes, unless otherwise specified.

1.02 REFERENCE STANDARDS

A. General: The latest revision of the following standards shall apply, at a minimum, to the coating materials, testing, and installation except where more stringent standards are applicable. In case of conflict, the most stringent requirements shall apply.

B. American National Standards Institute (ANSI):

1. MIL-STD-101C, Color Code for Pipelines and Compressed Gas Cylinders.

2. A13.1, Scheme for the Identification of Piping Systems.

3. Z535, Safety Color Code - Complete Set.

C. American Society for Testing and Materials (ASTM):

1. ASTM D16, Standard Terminology for Paint, Related Coatings, Materials, and Applications.

2. ASTM D1000, Standard Test Methods for Pressure-Sensitive Adhesive Coated Tapes Used for Electrical and Electronic Applications.

3. ASTM D1002, Standard Test Method for Apparent Shear Strength of Single-Lap-Joint Adhesively Bonded Metal Specimens by Tension Loading (Metal-to-Metal).

4. ASTM D1186, Standard Test Methods for Nondestructive Measurement of Dry Film Thickness of Nonmagnetic Coatings Applied to a Ferrous Base.

5. ASTM D1212, Standard Test Methods for Measurement of Wet Film Thickness of Organic Coatings.

6. ASTM D2200, Standard Practice for use of Pictorial Surface Preparation Standards and Guides for Painting Steel Surfaces (SSPC-VIS 1).

7. ASTM D2240, Standard Test Method for Rubber Property Durometer Hardness.

8. ASTM D3276, Standard Guide for Painting Inspectors (Metal Substrates).

9. ASTM D3359, Standard Test Methods for Measuring Adhesion by Tape Test.

10. ASTM D3363, Standard Test Method for Film Hardness by Pencil Test.

11. ASTM D4060, Standard Test Method for Abrasion Resistance of Organic Coatings by the Taber Abraser.

12. ASTM D4138, Standard Practices for Measurement of Dry Film Thickness of Protective Coating Systems by Destructive, Cross Sectioning Means.

13. ASTM D4258, Standard Practice for Surface Cleaning Concrete for Coating.

14. ASTM D4259, Standard Practice for Abrading Concrete.

15. ASTM D4261, Standard Practice for Surface Cleaning Concrete Masonry Units for Coating.

16. ASTM D4262, Standard Test Method for pH of Chemically Cleaned or Etched Concrete Surfaces.

17. ASTM D4263, Standard Test Method for Indicating Moisture in Concrete by the Plastic Sheet Method.

18. ASTM D4414, Standard Practice for Measurement of Wet Film Thickness by Notch Gages.

19. ASTM D4417, Standard Test Methods for Measurement of Surface Profile of Blast Cleaned Steel.

20. ASTM D4541, Standard Test Method for Pull-Off Strength of Coatings Using Portable Adhesion Testers.

21. ASTM D4787, Standard Practice for Continuity Verification of Liquid or Sheet Linings Applied to Concrete Substrates.

22. ASTM D5064, Standard Practice for Conducting a Patch Test to Assess Coating Compatibility.

23. ASTM D5162, Standard Practice for Discontinuity (Holiday) Testing of Nonconductive Protective Coating on Metallic Substrates.

D. National Association of Corrosion Engineers-International (NACE):

1. NACE Standard SPO178, Design, Fabrication, and Surface Finish Practices for Tanks and Vessels to be Lined for Immersion Service.

2. NACE Standard SPO188, Discontinuity (Holiday) Testing of New Protective Coatings on Conductive Substrates.

3. NACE Standard SPO287, Field Measurement of Surface Profile of Abrasive Blast Cleaned Steel Surfaces Using a Replica Tape.

4. NACE Standard SPO288, Recommended Practices for Inspection of Linings on Steel and Concrete.

E. The Society for Protective Coatings (SSPC):

1. SSPC Surface Preparation Standards.

2. SSPC-Vis 1, Guide and Reference Photographs for Steel Surfaces Prepared by Dry Abrasive Blast Cleaning.

3. SSPC-SP COM, Surface Preparation Specifications Commentary.

4. SSPC-PA 1, Shop, Field, and Maintenance Painting of Steel.

5. SSPC-PA 2, Procedure for Determining Conformance to Dry Coating Thickness Requirements.

6. SSPC-PA Guide 10, Guide to Safety and Health Requirements for Industrial Painting Projects.

7. SSPC Guide 6, Guide for Containing Surface Preparation Debris Generated During Paint Removal Operations.

8. SSPC Guide 20, Guide for Applying Thick Film Coatings and Surfacing Over Concrete Floors.

9. SSPC TU 6, Chemical Stripping of Organic Coatings from Steel Structures.

1.03 DEFINITIONS

A. Definitions of Painting Terms per ASTM D16, unless otherwise specified.

1.04 SUBMITTALS

A. Provide catalog cuts and other information for all products proposed for use that show compliance of those materials with these Specifications. Contractor submittals shall be made in accordance with the General Conditions and Section 01 33 00, SUBMITTALS. Provide a complete submittal package for each coating system to be utilized to include, but not necessarily be limited to, the following:

1. Data Sheets: Submit manufacturer's recommended coating system suitable for intended use per the Application Schedule included herein. For each coating system furnish the manufacturer's Technical Data Sheets, surface and application instructions, and colors available (where applicable) for each product used in the coating system.

B. Factory Applied Coatings: Manufacturer’s certification stating factory applied coating systems are recommended for intended exposure and meets or exceeds requirements specified herein.

C. Coating Product Manufacturer’s Certificate of Compliance. At completion of project, provide product manufacturer’s letter certificate stating factory or field applied coating systems provided are recommended for intended exposure and meets or exceeds requirements specified herein and that they were installed in accordance with coating manufacturer recommendations and contract documents requirements by Applicator.

D. Alternate Materials or Product Manufacturers Submittals: Alternate materials or product manufacturers shall be of same generic type of coating specified and provide equal to or greater quality, performance, chemical resistance, life, film thickness, solids by volume, and number of coats to be considered. Provide coating manufacturer letter stating that alternate material is equal to or better than specified product with supporting documentation of direct comparisons to verify equal to or better quality, chemical resistance, performance and life. Alternate coating systems to be considered must meet the same number of coats and minimum specified total dry film thickness.

1.05 QUALITY ASSURANCE

A. Applicator shall have a minimum five years experience with specified or similar products and similar surface preparation requirements**.**

B. Quality Control Issues:

1. If, in the coating manufacturer or Engineer's evaluation, surface preparation, application, or coating quality control testing are not as specified or there is excessive poor workmanship, number of defects, or damage, upon notification by Engineer, Contractor and Applicator shall immediately stop production. Stoppage of production and recoating shall be at the sole cost to the Contractor and Applicator.

2. Failure to follow product manufacturer's written recommendations and these specifications shall be cause for stoppage of surface preparation and coating operations and rejection of all coated surfaces completed outside these parameters, at the sole cost to Contractor and Applicator.

3. Surface preparation or coating application shall cease until quality control issues are resolved to the satisfaction of both the coating manufacturer and the Engineer. Surface preparation and repair procedures shall be mutually agreed upon between product manufacturer and Engineer before incorporation into work by the Contractor.

C. Field Test Instruments: Provide field test equipment and instruments as specified hereinafter in Part 2 Products.

1.06 REGULATORY COMPLIANCE

A. Perform surface preparation and coating in accordance with these specifications, and recommendations of the coating manufacturer's instructions and referenced standards.

B. Contractor shall be solely and completely responsible for condition of the project site, including safety of all persons (including employees) and property during performance of the work. The Engineer and/or Owner will NOT monitor safety practices and will not assume responsibility for safety.

C. Contractor shall monitor and be responsible for all health and regulatory compliance at the work site. The Engineer and/or Owner will NOT monitor health and compliance practices and will not assume responsibility for health and regulatory compliance issues.

D. Meet federal, state, and local requirements for limiting the emission of volatile organic compounds (VOCs) and worker exposure. Paints and coatings shall contain no lead, zinc or strontium chromate, asbestos, or mercury materials or compounds.

1.07 ENVIRONMENTAL (WEATHER) REQUIREMENTS

A. Do not prepare surfaces or apply coating in temperatures outside of manufacturer's recommended maximum or minimum allowable, or in dust, smoke-laden atmosphere, damp or humid weather, or under conditions that could cause ice build-up on the metal surface.

B. Perform abrasive blast cleaning, apply and cure coating only when relative humidity is below 85 percent and when structure surface temperature is more than 5 degrees F above dew point and rising unless approved by coating manufacturer. If heating is required, use only indirect fired heaters that do not increase humidity levels in the work area.

C. Coat surfaces the same day (within 8 hours maximum or sooner) of when abrasive blasted, before they start to rust. Re-blast surfaces that have started to rust or have been contaminated before coating.

D. Do not spray apply coatings if the wind velocity is above coating manufacturer’s limit or if spray application will cause over-spray damage to other structures.

E. Dust and Contaminants: Schedule work and provide protection to avoid excessive dust and airborne contaminants.

F. Ventilation: Provide ventilation as required to ensure that dust, contaminants, and vapor concentrations remain low and are safe.

1.08 OBSERVATION OF WORK

A. All surface preparation work and individual coats are subject to observation by Engineer, Owner, and coating manufacturer’s representatives. Provide access to the project site for Owner, Engineer, and coating manufacturer at all times during surface preparation, coating application, and to observe work.

B. Provide Engineer a minimum twenty working days advance notice to start of shop or field surface preparation work and coating application work.

C. Observation or testing by the Engineer, coating manufacturer, and/or Owner representative(s) or the waiver of observation or testing of any particular portion of the work shall not be construed to relieve the Contractor of his responsibility to correctly perform the work and testing required in

accordance with these specifications and the coating manufacturer's recommendations.

D. The Owner reserves the right to reject all work that does not meet the minimum requirements of this specification. This may be done either during or after completion of the surface preparation or coating work, during subsequent observations, warranty inspections, or at any time when discovered during the warranty period.

E. The Contractor shall repair any defective or rejected work in accordance with written recommendations of the particular coating or lining manufacturer as reviewed and approved by the Engineer. The Contractor shall remedy any defective or rejected work in a timely manner to the satisfaction of the Owner and Engineer at Contractor's sole cost.

1.09 PROJECT WARRANTY

A. The Contractor, coating applicator, and coating manufacturer shall jointly and severally warrant to the Owner and guarantee the work under this section against defective workmanship and materials for a period of one year commencing on the date of final acceptance of the work.

B. Repairs: Any defects in the coating system discovered during inspection or during the warranty inspection(s) shall be repaired and retested in a timely manner (repairs shall be started within 30 days and finished with complete cure within 60 days) by the Contractor and/or Applicator. Complete all repairs in accordance with the written coating manufacturer's instructions as reviewed and approved by the Engineer. The repairs shall be completed to the satisfaction of the Engineer and Owner. All surface preparation and coating repair or any damage to other work caused by such defect or repairing of the defects including but not limited to any additional costs to the Owner, additional expenses or design/construction services by the Engineer, including additional testing and evaluation, full-time observation during repairs, and re-warranty inspections shall be at the sole cost to Contractor and/or Applicator.

PART 2 PRODUCTS

2.01 GENERAL

A. Provide new materials intended for this type of service in accordance with this specification and the referenced standards. Whenever the requirements of these specifications or Drawings exceed those of the codes or manufacturer's instructions, the requirements of these specifications or Drawings shall prevail. Where a higher quality or better grade of material or a higher standard of workmanship is required, the most stringent requirement shall apply.

B. Products shall comply with federal, state, and local requirements limiting the emission of volatile organic compounds as well as any other applicable federal, state, or local regulations.

2.02 PRODUCT MANUFACTURERS

A. Each coating system provided herein shall be the end product of one manufacturer in order to achieve standardization for appearance, maintenance, and compatibility.

B. Field applied coating systems specified for each general type of coating (Supplier Code) shall be the end product of one manufacturer for all of the coating systems in that Supplier Code classification in order to achieve standardization for appearance, maintenance, and compatibility.

C. Suppliers listed below can usually supply the types of materials specified in this section. Alternate suppliers will be considered, subject to approval of the Engineer. Contact the suppliers for information regarding the location of their representative nearest the project site.

D. Industrial Coating Manufacturers Supplier Code A (able to supply most heavy-duty industrial coatings and architectural paints):

1. AkzoNobel/Devoe High Performance Coatings.

2. AkzoNobel/International Ceilcote Coatings.

3. Carboline Global.

4. Sherwin-Williams Company.

5. Pacific Southwest Coatings/PPG Protective and Marine Coatings.

6. Tnemec Coatings.

E. Fusion Bonded Coating Suppliers Code E:

1. Axalta Coating Systems Nap-Gard.

2. 3M Scotchkote.

3. Valspar (subsidiary of Sherwin-Williams Company).

4. Western Coatings, Inc./Farwest Steel Corporation.

F. Architectural Paint Manufacturers: Subject to compliance with requirements, provide products of one of the following:

1. Benjamin Moore Company.
2. Behr Process Corporation.
3. Pratt & Lambert Paints.
4. Sherwin-Williams Company/Valspar.
5. PPG Industries.

2.03 MATERIALS

A. General:

1. Material Quality: Manufacturer's highest quality products for specific application and suitable for intended service.
2. Materials Including Primer and Finish Coats: Produced by same manufacturer.
3. Thinners, Cleaners, Driers, and Other Additives: As recommended by manufacturer of the particular coating.

B. The use of a manufacturer's name and model or catalog number is solely for establishing the standard of quality and general configuration desired. Products of other manufacturers of equal or better standard and quality will be considered in accordance with the General Conditions.

C. Products are listed below according to their approximate order of appearance in the systems. The letter designating the manufacturer code refers to the corresponding manufacturers names listed under PRODUCT MANUFACTURERS hereinbefore. Not all listed products may be included in the project.

Coating Product Generic Description and Manufacturer Supplier Code		
Product	**Definition**	**Manufacturer Supplier Code**
Tar Stop	Coating designed to prevent bleeding of black asphaltic varnish through finish paint; Shellac is a suitable alternate; not applicable for white and pastel colors	A
Surface Tolerant Epoxy	Surface tolerant, polyamide or polyamidoamine anticorrosive, converted epoxy primer containing rust-inhibitive pigments suitable for the intended service	A

Coating Product Generic Description and Manufacturer Supplier Code		
Product	**Definition**	**Manufacturer Supplier Code**
Vinyl Ester	Premium, quality, high solids, (92%), thermosetting coating with exceptional corrosion resistance. Suitable for this intended service	A
Epoxy Primer	Polyamide, anticorrosive, converted epoxy primer containing rust-inhibitive pigments	A
Epoxy Modified Cementitious Mortar	Aggregate reinforced epoxy, for patching and filling voids and bugholes in concrete	A
Coal-Tar Epoxy	Amine or phenolic epoxy type; 70 percent volume solids minimum, suitable for immersion service	A
Organic Zinc Rich Primer	Converted epoxy, epoxy/phenolic or urethane type, minimum 10 pounds metallic zinc content per gallon	A
Rust-Inhibitive Primer	Single-package steel primers with anticorrosive pigment loading	A
Modified Aromatic Polyurethane Primer	Moisture cured self-priming, anticorrosive primer with micaceous iron oxide and zinc, suitable for immersion and atmospheric service.	A
Alkyd Enamel	Optimum quality, gloss finish, medium long oil	A
Wash Primer	Vinyl butyral acid	A
Epoxy Nonskid Finish	Polyamide or amine converted epoxies aggregated; aggregate may be packaged separately	A
Inorganic Zinc Primer	Solvent or water based, 14 pounds metallic zinc content per gallon minimum; follow manufacturer's recommendation for top-coating	A
Silicone/Silicone Acrylic	Elevated temperature silicone or silicone/acrylic based	A
Cementitious Acrylic Emulsion	Two-component (liquid and aggregate) filler	A
Polyamide High Build Epoxy	Capability of 4 to 8 MDFT per coat. Must be compatible with wastewater basin coating requirements.	A

Coating Product Generic Description and Manufacturer Supplier Code		
Product	**Definition**	**Manufacturer Supplier Code**
High Build Epoxy, High Solids	High build, high solids epoxy with percent of volume solids 75 to 80 percent minimum, suitable for immersion service Capability of 4 to 8 MDFT per coat	A
Polyamide Epoxy, High Solids	Percent of volume solids 80 percent minimum, suitable for immersion service	A
Polyurethane Enamel	Two-component, aliphatic or acrylic based polyurethane; high gloss finish suitable for the intended service	A
Hydrophobic Aromatic Polyurethane	Moisture-cured, hydrocarbon-modified coating	A
Acrylic/Latex Finish	High-gloss, single-component suitable for the intended service	A
Canvas Sealer	Single-package latex or alkyd primer for canvas surfaces; follow manufacturer's recommendations for surface preparation	A
Bituminous Paint	Single-component, coal-tar pitch based	A
Block Filler	Primer-sealer designed for rough masonry surfaces, 100 percent acrylic emulsion	A
Epoxy Leveler	Leveler or sealer designed for rough concrete or masonry surfaces, epoxy based.	A
Alkyd (Semigloss)	Semigloss alkyd	A
Acrylic Latex (Flat)	Flat latex	A
Water Base Epoxy	A two-component, polyamide epoxy emulsion	A
Sanding Sealer	Co-polymer oil, clear, dull luster	A
Stain, Concrete	Acrylic, water repellant, penetrating stain	A
Acrylic Sealer	Clear acrylic	A
Varnish	Nonpigmented vehicle based on a variety of resins (alkyd, phenolic, urethane) available in gloss, semigloss, and flat finishes	A
DTM Acrylic	Acrylic coating suitable for direct to metal applications and over coating of existing coatings suitable for the intended service.	A
Fusion Bonded Coating	100 percent solids, thermosetting, fusion bonded, dry powder epoxy or polyurethane resin, suitable for the intended service	E

Coating Product Generic Description and Manufacturer Supplier Code		
Product	**Definition**	**Manufacturer Supplier Code**
Fusion Bonded, PTFE Lube or Grease Lube	Polytetrafluoroethylene grease as manufactured by CONDAT; or PTFE grease as supplied by McMaster-Carr Company; or RL 736 as manufactured by Amrep, Inc.	
Modified Polyamine Epoxy	100 percent solids minimum, for severe wastewater environments including H2S gas	A
Novolac Epoxy	Two-component Novolac Epoxy, 100% solids, with excellent chemical resistance, self-leveling, moisture tolerant, suitable for vertical and horizontal surfaces, and intended for chemical resistance and containment structures.	A

2.04 EXTRA COATING MATERIAL FOR OWNER

A. Spare Coating Materials: Provide at time of field coating final testing and acceptance, one unopened gallon can of each type and each color of field coating utilized. If plural component type coating, provide repair coating. Material shall be new and at beginning of shelf life.

2.05 COLORS:

A. General:

1. Colors to be used are to be selected by the Owner from color samples to be supplied by the coating manufacturer, unless indicated otherwise.

2. Any proprietary identification of colors is for identification only. Selected authorized manufacturer may supply matches.

B. Pipe Identification Painting:

1. Color code exposed, non-submerged metal and plastic piping except electrical conduit. Paint fittings and valves the same color as pipe.

2. On exposed stainless steel piping, apply color 24-inches in length along pipe axis at connections to equipment, valves, or branch fittings, at wall boundaries, and at intervals along piping not greater than 9 feet on center.

3. Piping Color Coding: In accordance with Pipe System and Color Code Schedule as shown in table hereinafter. Coat piping in solid colors and provide bands as specified hereinafter.

4. Pipe Supports: Mild steel, painted light gray, Tnemec Company No. 32GR; Sherwin-Williams SW 6255; or equal. Stainless steel supports need not be painted.

C. Equipment Colors:

1. Equipment includes the machinery or vessel itself plus the structural supports and fasteners and attached electrical conduits.

2. Paint exposed, non-submerged portions of equipment the same color as the piping it serves per the piping color code, except as itemized below:

a. Dangerous Parts of Equipment and Machinery: OSHA Orange.

b. Fire Protection Equipment and Apparatus: OSHA Red.

c. Physical hazards in normal operating area and energy lockout devices, including, but not limited to, electrical disconnects for equipment and equipment isolation valves in air and liquid lines under pressure: OSHA Yellow.

D. Pipe Identification Labels:

1. Identification labels shall bear full Pipe Description/Flow Stream Identifier name as shown on the Pipe System and Color Code Schedule included below. Install separate flow directional arrows with each label.

2. Labels shall be self-adhesive vinyl, long lasting, resistant to moisture, oils, solvents, and weathering, meeting OSHA requirements. The label lettering colors and lettering heights shall be in accordance with the latest version of ANSI or ASME A13.1.

3. Insulated pipe shall be labeled on the exterior of the insulation or jacketing. Pipe labels affixed to pipe insulation/jacketing shall be of the pipe color listed below.

4. Locate labels at connections to equipment, valves, branch fittings, at wall boundaries, and at intervals along piping not greater than 18 feet on center, with at least one label applied to each exposed run of pipe.

5. Manufactured by Brady Worldwide, Inc.; Seton Signs, Labels, and Safety Solutions; or equal.

E. Pipe Identification Tags for Smaller Piping: For piping 3/4-inch diameter or smaller, identify with appropriate aluminum, brass, or stainless steel identification tags. Tags shall be minimum 2-inch diameter or 2-inch square shape with lettering etched and filled with enamel, as manufactured by Brady Worldwide, Inc.; Seton Signs, Labels, and Safety Solutions; or equal.

F. Pipe System and Color Code Schedule:

1. The color code scheme proposed below is approximate and must be verified with the Engineer prior to any painting.

2. If a pipe designation is not shown, Contractor shall assume that painting for color coding will be required and direction from the Engineer regarding pipe color and banding should be sought.

Pipe Designation	Pipe Description	Pipe Color	Bands
PA	PLANT AIR	Dark green	None
V, VTR	VENT, VENT THROUGH ROOF	Gray or match wall color	None

PART 3 EXECUTION

3.01 GENERAL WORKMANSHIP

A. All materials and equipment associated with surface preparation and coating application as shown and specified herein shall be furnished and installed by, or under the direction of, the Contractor. All work shall be supervised by qualified persons who have read and understood the minimum requirements of these specifications. Any changes in design or method of installation of an item as specified shall be reviewed and approved by the Engineer prior to installation.

B. All work shall be in accordance with these specifications and the printed directions and recommendations of the paint manufacturer whose product is to be applied. Where a higher standard of workmanship is required, the most stringent requirement shall apply.

C. Nothing included or omitted in this specification shall relieve the Contractor of the obligation of providing a complete and satisfactory coating system.

D. Any portion of the work that does not meet the minimum requirements of these specifications shall be corrected by the Contractor at no additional cost to the Owner.

3.02 PAINT DELIVERY, STORAGE, AND HANDLING

A. Deliver new coating materials to project site in original unopened containers and cartons. Store products in a covered and protected area that is heated or cooled to maintain temperatures within the range recommended by paint manufacturer. Store materials in original packaging until time of use.

B. Comply during storage, mixing, and application with all pertinent codes, fire regulations, and coating manufacturer's requirements.

3.03 FACTORY AND SHOP COATED ITEMS AND FABRICATED EQUIPMENT

A. Unless otherwise indicated, all fabricated components and equipment shall be shop primed. At Contractor's option, equipment may be shop or field mid- or top-coated. Surface preparation and factory or shop coating application shall be in accordance with the requirements of this specification. Degree of surface preparation and coating type shall be per the Application Schedule included herein or as specified in the specific equipment or item's specification sections. In case of conflict, the most aggressive surface preparation and the coating system with the highest protection level provided shall be required.

B. Confirm that the equipment manufacturer's standard or recommended coating will provide equal to or better quality, chemical performance, and durability than the specific coating system specified herein. If equipment manufacturer's standard or recommended coating will not, then provide surface preparation and shop or factory coating equal to or better than that specified for that specific area per the Application Schedule. Shop-applied primer or coats shall be the same type as the specified coating system and shall be applied at the minimum dry film thickness recommended by the coating manufacturer.

C. Factory or shop applied primer and coating shall be compatible with field applied coatings submitted and being used for this project. Equipment manufacturer or shop or factory coating applicator shall provide product data sheets identifying the shop or factory primer and top coats to the on-site coating applicator, and provide information to Contractor to substantiate that coatings are compatible and to identify recoat windows.

D. Shipping: Where pre-coated items are to be shipped to the site, protect coating from damage. Coated items may be rejected for excessive damage as determined by the Engineer. All rejected items shall be immediately removed from the project site and replaced at sole cost to the Contractor.

E. Shop Coating Field Repairs: Damaged, deteriorated or poorly applied shop primed and coated items that do not meet the requirements specified herein shall be removed and the surfaces recoated. If the shop applied prime and

finish coats meet the requirements specified herein, the field coating required shall consist of touch-up coating and then applying any finish coats necessary to achieve the specified film thickness and continuity.

3.04 SURFACES NOT REQUIRING PAINTING

A. Unless otherwise stated or shown, the following areas or items will not require painting or coating:

1. New building interior concrete floors and exterior slabs and equipment pads.

2. Reinforcing steel.

3. Nonferrous and corrosion resistant ferrous alloys such as copper, bronze, monel, aluminum, chromium plate, atmospherically exposed weathering steel, and stainless steel, except where:

a. Required for electrical insulation between dissimilar metals.

b. Aluminum and stainless steel are embedded in concrete or masonry.

c. Aluminum is in contact with concrete or masonry.

d. Color coding of equipment and piping is required.

4. Portions of ferrous material embedded in concrete. This does not apply to back faces of bare items or equipment mounted to concrete or masonry surfaces, which shall be galvanized or coated prior to erection.

5. Nonmetallic materials such as glass, PVC, wood, porcelain, and plastic except as required for architectural painting, color coding, or UV protection. Plastic piping must be color code painted unless specifically stated otherwise.

6. Fiberglass reinforced plastic (FRP) with an integral ultra-violet resistant colored gel coat except as required for painting or color coding interior or exterior of building.

7. Prefinished hardware and hardware accessories, electrical fixtures, and plumbing fixtures.

8. Exposed, non-submerged electrical conduits attached to unpainted concrete or masonry surfaces. Where the conduit is attached to painted surface, it shall be painted the same color as that surface.

9. Items specified to be galvanized after fabrication, unless specified otherwise elsewhere, or subject to immersion. Galvanized surfaces shall not be immersed without top coating(s). Submerged galvanized surfaces shall be coated with the same coating system as required for other ferrous materials in that area.

3.05 PROTECTION OF ITEMS NOT TO BE PAINTED

A. Unless otherwise stated or shown, protect the areas or items that will not require surface preparation or coating in the following manner:

1. Remove, mask, or otherwise protect hardware, lighting fixtures, switchplates, aluminum or stainless steel surfaces, machined surfaces, couplings, shafts, bearings, tags or nameplates on machinery, and other surfaces not intended to be painted.

2. Protect working parts of mechanical and electrical equipment from damage during surface preparation and painting process. Mask openings in motors to prevent abrasives, paint, and other materials from entering the motors.

3. Cap or seal all open piping, valves, and conduits, prior to beginning any surface preparation or coating work to prevent entry of foreign material into the piping, valves, or conduit systems.

4. Protect nearby structures, equipment, vehicles, building, etc. from surface preparation and coating operations. Immediately remove coatings that are applied or fall on structures or items not intended to be coated.

3.06 SURFACE CLEANING AND BLASTING METHODS

A. General: Provide materials, equipment, procedures, and safety equipment for personnel in accordance with current SSPC specifications. Degree of cleanliness is as follows:

1. Solvent Cleaning: SP-1.

2. Hand Tool Cleaning: SP-2.

3. Power Tool Cleaning: SP-3.

4. White Metal Blast Cleaning: SP-5.

5. Commercial Blast Cleaning: SP-6.

6. Brush-Off Blast Cleaning: SP-7.

7. Pickling SP-8.

8. Near-White Blast Cleaning: SP-10.

9. Power Tool Cleaning to Bare Metal: SP-11.

10. High Pressure Water Jetting: SP-12.

11. Surface Preparation of Concrete: SP-13.

B. The words "solvent cleaning", "hand tool cleaning", "wire brushing", and "blast cleaning", or similar words of equal intent in these Specifications or in paint manufacturer's specifications refer to the applicable SSPC Specifications.

3.07 PREPARATION OF SURFACES

A. General:

1. Inspect and provide substrate surfaces prepared in accordance with these specifications and the printed directions and recommendations of the coating manufacturer according to the type of surface and type of coating to be applied.

2. Equipment, procedures, and degree of cleaning shall meet minimum requirements as specified under the Application Schedule. Minimum degree of surface preparation (SSPC Grade) is as specified herein and takes precedence over the coating manufacturer's recommendations unless the coating manufacturer’s recommendations are more stringent.

3. Minimum surface profile shall be according to specified thickness or coating manufacturer recommendations for each coating type, whichever is greater.

4. Ensure surface is completely dry before beginning surface preparation in accordance with coating manufacturer’s recommendations.

B. Metal Surfaces:

1. Equipment, procedures, and degree of cleaning shall meet minimum specified requirements per SSPC. Correct all metal surface and fabrication defects revealed by surface preparation.

2. Welds and Surface Defects:

a. Prepare and correct defects such that there is no undercutting or reverse ridges on weld bead, no weld spatter on or adjacent to weld or any other area to be painted, or no sharp peaks or ridges along weld bead.

b. Remove all weld flux and grind embedded pieces of electrode or wire flush with adjacent surface of weld bead. Grind porous welds down to solid weld material. Round or chamfer sharp edges and grind smooth burrs, jagged edges, and surface defects.

c. Complete all welding, burning, cutting, grinding, and other such work prior to field surface preparation and coating. Abrasive blast after all cutting, welding and/or grinding is completed to provide suitable anchor profile.

3. Pre-blast Cleaning Requirements (Decontamination):

a. Remove oil, grease, welding fluxes, and other surface contaminants per SSPC SP-1 prior to abrasive blast cleaning.

b. Cleaning Methods: Steam, open flame, high pressure (3,000 psi or greater) hot water or cold water with appropriate detergent additives followed with clean water rinsing.

c. Clean small isolated areas as above or solvent clean with suitable solvents or degreasers and clean cloths.

4. Abrasive Blast Cleaning Requirements:

a. Complete the surface preparation and lining or coating application in a continuous operation. Complete prime coat or lining during the same day (within 8 hours maximum) of when the surface preparation is completed.

b. Complete surface blasting with proper equipment to obtain minimum SSPC SP degree of cleanliness specified herein.

c. Provide type and size of abrasive to produce minimum surface depth, sharpness, and angular profile that meets coating manufacturer's recommendations for particular primer or coating to be used.

d. Blasted surface shall be visually inspected for surface imperfections. Imperfections, which can be detrimental to application of the coating, shall be re-blasted or removed by filing or grinding and then re-blasted.

5. Post-Blast Cleaning and Other Cleaning Requirements:

   a. Clean surfaces of dust and residual particles from cleaning operations by dry (no oil or water vapor) air blast cleaning.

   b. Keep surfaces clean and protect from moisture, weather, dust, dirt, sandblast debris, and other contamination. The structure surfaces shall be completely clean, dust free, and dry before application of coating or lining. Paint surfaces the same day they are blasted. Re-blast surfaces that have started to rust before they are painted.

C. Concrete Surfaces:

1. Prepare concrete surfaces in accordance with coating manufacturer's directions, these specifications, and SSPC SP-13 to achieve a minimum surface smoothness, texture, and profile for the specific level or grade recommended by the coating manufacturer for each concrete coating system.

2. Do not begin until 30 days minimum after concrete has been placed. New or repair concrete and cementitious based materials shall be allowed to cure before coating per coating manufacturer's written recommendations. Do not treat concrete with hardeners or sealers where special coatings are to be applied. Unless otherwise required for proper adhesion, ensure surfaces are dry prior to painting.

3. Provide water barrier coating on backside of concrete walls and floors to be coated to minimize hydrostatic pressure from groundwater or coat interior surfaces of water bearing structures to minimize hydrostatic pressure on interior room concrete walls or floors. All leaks and infiltration shall be eliminated and repaired per coating manufacturer recommendations.

4. Remove grease, oil, dirt, chalk, form release agents, salts or other chemicals, loose materials, or other foreign matter by solvent, detergent, or other suitable cleaning methods per ASTM D4258.

5. Remove and level all mortar splatter and concrete protrusions and round or trim sharp edges by grinding, chipping, wire brushing, or other methods approved by coating manufacturer.

6. Concrete surface shall be smooth with no sharp edges, cavities, bug holes, etc. and profile shall have a texture feel of rough sandpaper to the degree in accordance with the coating manufacturer's recommendations.

7. Fill and patch bug-holes, pits, air pockets, voids, and prepare cracks with coating manufacturer’s recommended filler/surfacer and crack repair materials. Secure coating manufacturer's recommendations for additional preparation and apply leveler material if required for excessive bug holes exposed after abrasive blasting.

8. Prepare surface and terminate coatings and fill or bevel at angles and edges in accordance with coating manufacturer’s recommendations and special details for each type of coating.

D. Plastic Surfaces: Hand sand plastic surfaces to be coated with a medium grit sandpaper to provide tooth for the coating system. Large areas may be power sanded or brush-off blasted, provided sufficient controls are employed so surface is roughened without removing excess material. Lightly sand between coats.

E. Masonry Surfaces:

1. Prepare porous concrete masonry unit surfaces in accordance with coating manufacturer’s directions and SSPC SP-13. Complete and cure masonry construction for 14 days or more before starting surface preparation work.

2. Remove oil, grease, dirt, salts or other chemicals, loose materials, or other foreign matter by solvent, detergent washing, or other suitable cleaning methods. Clean masonry surfaces of mortar and grout spillage and other surface deposits using nonmetallic fiber brushes and commercial muriatic acid followed by rinsing with clean water, brush-off blasting, or water blasting.

3. Do not damage masonry mortar joints or adjacent surfaces. Leave surfaces clean and dry, unless otherwise required for proper adhesion, dry prior to painting.

4. Masonry Surfaces to be Painted: Uniform texture and free of surface imperfections that would impair the intended finished appearance.

5. Clear Coated Masonry Surfaces: Free of discolorations and uniform in texture after cleaning.

F. Gypsum Board:

1. Prepare gypsum board surfaces in accordance with coating manufacturer’s directions. Sand joint compound smooth and feather edge. Minimize sanding of the gypsum board surface to not loosen and raise paper covering nap.

2. Ensure that surface finish is dry, free of oil, grease, dust, dirt, powdery residue, or any other contaminants. Lightly sand prime coat at taped joints to remove raised paper nap in accordance with coating manufacturer's recommendations.

3.08 COATING APPLICATION

A. General:

1. Apply coatings in accordance with these specifications, the paint manufacturers' printed recommendations, and project specific details. The more stringent requirements shall apply.

2. Utilize materials, application equipment, tools, pressure settings, and techniques in accordance with coating manufacturer recommendations for each specific type of coating and surface. Ensure that minimum and maximum allowable recoat times are not exceeded and that material is used before it's pot life is exceeded.

3. Apply coating at wet film thickness as recommended by manufacturer so as to provide a uniform coverage as required to meet the specified minimum dry film thickness. Apply uniform monolithic coating, free of defects, holidays, pinholes, skips, or misses, with no runs, sags, and drips.

4. The surface area covered per gallon of coating for various types of surfaces shall not exceed those coverage rates recommended by the coating manufacturer:

a. Adjust application method rate for thinned coatings to provide same thickness or coverage as for unthinned materials.

b. On rough or pitted metal or concrete and masonry surfaces, application rates will vary according to surface texture; do not exceed the manufacturer's printed coverage rates.

c. On porous surfaces, decrease the coverage rate or apply additional coat of paint to achieve the desired protective and decorative coating finish and color.

5. Keep surface clean and free of any moisture, sand, grit, dirt, or other contamination. Reclean if required before coating application.

6. Apply only to surfaces within minimum and maximum range temperature as recommended by the product manufacturer.

7. Thinning of Coatings:

a. Thin coating immediately prior to use where necessary to meet weather, temperature, application method, and surface conditions as recommended by the coating manufacturer.

b. Provide only the type of thinner as recommend by the coating manufacturer for each type of coating. Thin only in amount as allowed by the coating manufacturer.

B. Special Requirements:

1. Coat surfaces with a one coat/multiple pass spray technique to build the specified millage. Apply and build coating as recommended by the product manufacturer to not cause out-gassing. Coat high profile areas with multiple passes from different directions, backroll if recommended by the coating manufacturer. If necessary, film thickness may be increased as needed per the coating manufacturer's recommendations.

2. Inaccessible Locations or Bolted Connections:

a. Coat units or surfaces to be bolted together or joined closely to structures or to one another prior to assembly or installation with prime and mid-coats, which will be accessible for topcoating after assembly.

b. Apply total (full) number of specified coats and thicknesses to surfaces which are inaccessible after assembly prior to erection or assembly.

c. Touch-up of all surfaces shall be completed after assembly and installation.

d. Apply complete top finish coat to all items accessible after assembly and installation.

3. Uncoated Equipment Bases and Supports: Prior to setting or connecting equipment in place, coat underside or backside of all ungalvanized or uncoated equipment bases and supports with a prime and mid-coat of epoxy except for bases to be encased in grout.

C. Coordination of Work with Other Specification Sections: Some paint systems require specific application details that are included in other sections of the Contract Documents or the coating manufacturer instructions. These specific detail requirements shall be considered as part of this work.

D. Film Thickness:

1. Coverage is listed as either total minimum dry film thickness in mils (MDFT) or the maximum spreading rate in square feet per gallon (SFPG). Per coat (PC) determinations are listed as MDFTPC or SFPGPC.

2. Conduct testing per SSPC-PA 2 with the exception that the averaging method is not allowed. Dry film thickness mils specified herein is the absolute minimum allowed. Conduct additional dry film measurements in any area if requested by Engineer.

3. Number of Coats: Minimum specified required irrespective of the coating thickness. Additional coats may be required to obtain the minimum required paint thickness, depending on method of application, differences in manufacturers' products, and atmospheric conditions.

4. Film Build per Coat or Coating System:

    a. Do not exceed coating manufacturer's recommendations. Measure with wet film gauge to ensure proper thickness during application.

    b. Where dry film thickness measurements are below the specified minimum, provide additional coat(s) of paint as necessary to meet the thickness required in accordance with the coating manufacturer directions.

    c. Give particular attention to edges, angles, flanges, bolts, nuts, rivets, and other similar areas where insufficient film thicknesses are likely to be present to ensure proper millage and coverage in these areas.

E. Coating System Curing:

1. Obtain full cure of mortar, sealants, seam sealers, and cementitious coating systems before top coating. Consult product manufacturer's written instructions for these requirements.

2. If required by weather conditions or project schedule, provide and continuously operate heating equipment during both coating and cure period in accordance with the coating manufacturer’s instructions. Use only indirect heat source types approved by the coating manufacturer.

3. Allow sufficient time between coats to allow thorough drying of previous coat before application of finish coats.

4. For coatings subject to immersion, obtain full cure for completed system before any exposure to liquid or water. Consult coatings manufacturer's written instructions for these requirements. Do not immerse coatings for any purpose until completion of the curing cycle.

F. Porous Surfaces, Such As Concrete or Masonry:

1. Filler/Surfacer: Use coating manufacturer's recommended product to fill air holes, bug holes, and other surface defects prior to additional coats.

2. Prime Coat: May be thinned to provide maximum penetration and adhesion.

a. Type and Amount of Thinning: Determined by paint manufacturer and dependent on surface density and type of coating.

b. Do not exceed coating manufacturer’s unthinned square foot coverage rate per gallon.

3. Surfaces Specified to Receive Water Base Coating: Damp, but free of running water, just prior to application of coating.

3.09 CONVENTIONAL AND CATALYZED COATINGS

A. Multiple-Component Coating Mixing:

1. Provide unopened product containers to designated mixing area. Prepare using the contents of the container for each component as packaged and recommended by the coating manufacturer. Mix in clean containers of adequate capacity. No partial batches will be permitted.

2. Provide heating or cooling of materials if required to meet minimum or maximum temperature requirements of the manufacturer during mixing and application.

3. No unauthorized thinners or other materials shall be mixed into the paint. Do not thin more than recommended by the coating manufacturer.

B. Conventional and Catalyzed Coating Application:

1. Apply coatings in accordance with these specifications and the paint manufacturer's printed recommendations and specific details for each type of coating. The more stringent requirements shall apply.

2. Apply with equipment, tools, pressure settings, and application techniques in accordance with the coating manufacturer's instructions for each type of surface and coating in accordance with SSPC-PA 1. Apply at a uniform thickness and at the rate specified by the manufacturer to achieve the minimum dry film thickness required for each coat. Apply in a manner to provide a uniform continuous coating film free of defects or holidays.

3. Brush and/or Roller Application: Top quality, proper style and size brushes and rollers shall be used. The brushing or rolling shall be done so that a smooth coat as nearly uniform in thickness as possible is obtained. Brush or roller strokes shall be made to smooth the film without leaving deep or detrimental marks. Surfaces not accessible to brushes or rollers may be painted by spray, by dauber or sheepskins, and paint mitt.

4. Spray Application:

    a. The equipment used shall be suitable for the intended purpose, shall be capable of properly atomizing the coating to be applied, and shall be equipped with suitable pressure regulators and gauges.

    b. Coating shall be applied in a uniform layer with a minimum 50 percent overlap pattern in accordance with the coating manufacturer's application instructions. All runs and sags should be brushed out immediately or the coating shall be removed and the surface recoated.

    c. High build coatings should be applied by a crosshatch method of spray application to ensure proper film thickness of the coating.

    d. Areas inaccessible to spray shall be brushed; if also inaccessible to brush, daubs or sheepskins shall be used, as authorized by the manufacturer.

    e. Special care shall be taken with thinners and paint temperatures so that coating of the correct formula reaches the receiving surface.

3.10 FIELD COATING OF SHOP PRIMED AND FACTORY COATED ITEMS

A. General:

1. Schedule inspection with Applicator and Engineer at project site before field priming or top-coating of shop or factory finished items previously delivered to the project site. Conduct dry film, solvent wipe, and adhesion testing before top-coating.

2. Field coating of shop primed or factory finished items shall be completed during the recoat window for shop or factory coating. If the shop or factory coating window is exceeded, obtain recommendations from the field coating material manufacturer for surface preparation requirements.

3. If in the opinion of the Engineer or the top-coating manufacturer, any shop or factory prime or finish coats have been improperly prepared and applied, are in an excessively damaged condition, if the surface preparation or coating materials used are contrary to those specified herein, or are not compatible with the specified field coats, then the factory or shop applied materials shall be completely removed and the factory coated item recoated at the sole cost to the Contractor.

B. Surface Preparation and Coating Application:

1. Prior to application of field finish coats, clean shop primed or coated surfaces with solvent wipe (SSPC SP-1) so they are free of dirt, oil, and grease. Hand or power sand areas of chipped, peeled, or abraded coating, feathering the edges (SSPC SP-11, or SP-2 and SP-3). Areas of rust bleeding, rust penetration, or damaged shop coated items shall be spot blasted to SSPC SP-5 (White Metal Blast) or power-tooled cleaned to bare metal SSPC SP-11.

2. Follow with a spot primer using the specified primer before the application of succeeding coats.

3. If the coating window is missed or if recommended by the coating manufacturer, lightly abrasive blast shop primed or coated items scheduled to receive field applied finish coats to remove glossy coating and provide a rough profile. Apply mist or tie coat of specified primer, minimum 1-mil dry film thickness, if recommended by the field applied coating manufacturer depending on the type of coating and surface condition.

4. Repair abraded areas on factory finished items as recommended by the coating manufacturer, as reviewed and approved by the Engineer. Apply spot primer, touch-up, and additional coats as

required according to the field coating manufacturer's written recommendations. Carefully blend repaired areas into original finish.

C. Applicator Quality Control Inspection: Applicator shall conduct dry film measurements, holiday testing, and adhesion testing on cured coatings as specified.

3.11 EXISTING COATED SURFACES TO BE PAINTED

A. Unless otherwise specified, existing or recently constructed coating systems damaged by new construction shall be repaired and coated in accordance with the appropriate coating system specified for that area as new work.

3.12 FIELD COATING REPAIR

A. Materials and Surfaces Not Scheduled to be Coated: Repair or replace damaged surfaces and materials not scheduled to be coated.

B. Repairs, General: Complete repairs and surface preparation in accordance with these specifications and the manufacturer's recommended procedures. Confirm that repair materials are compatible with damaged or existing coatings.

C. Spot Repair of Damaged Existing Coatings, Pinholes, and Holidays: Prepare the surface as specified hereinbefore for "Existing Surfaces to Be Painted", or as required per the specific coating type. Apply one spot coat of the specified primer to bare areas overlapping the prepared existing coating. Apply specified finish coat(s).

D. Other Repair of Damaged Coatings, Pinholes, and Holidays:

1. At completion of the work, inspect, touch-up, and restore coatings where damaged. Touch-up of minor damage is acceptable where the result is not visually different from the surrounding surfaces. Where touch-up results in visually different conditions, either in texture, color, sheen or appearance, recoat the entire surface.

2. Remedy all defective work in a timely manner to the satisfaction of the Engineer and Owner, at the sole cost to the Contractor.

3. If an item has an improper finish color, or insufficient film thickness, clean surface and topcoat with the specified paint material to obtain the specified color and coverage.

4. Obtain specific surface preparation and coating repair information from the coating manufacturer for coatings that have exceeded the maximum recoat time (window).

5. Hand or power sand visible areas of chipped, peeled, or abraded paint, and feather the edges. Follow with primer and finish coat. Depending on the extent of repair and appearance, a finish sanding and topcoat may be required in accordance with the coating manufacturer recommendations.

6. Evidence of runs, bridges, shiners, laps, or other imperfections is cause for rejection and repair.

7. Apply finish coats, including touchup and damage repair coats, in a manner which will present a uniform texture and color matched appearance.

E. Unsatisfactory Application:

1. The coating shall be a uniform continuous (monolithic) film of correct coverage and appearance per coat, free of imperfections or defects. Evidence of holidays, defects, pinholes, misses, runs, bridges, shiners, laps, or other imperfections shall be cause for rejection. Coating materials shall be uniform in color with no evidence of off-ratio application, disbondment, delamination, or blisters.

2. Where stains, contamination, or undercoats show through the final coat, correct defects and cover with additional coats until the coating is of uniform coverage, finish, color, and appearance.

3. Engineer may reject coated and lined items for excessive damage, poor workmanship, contamination, or inadequate surface preparation. Items determined by the Engineer or coating manufacturer’s representative to have excessive problems shall be corrected in a timely manner at the sole cost to the Contractor.

F. Defective Work:

1. If defective work or unsatisfactory application is discovered during initial surface preparation or coating application work, Contractor final inspections, during warranty inspections, or anytime during the warranty period, it shall be corrected at the sole cost to the Contractor including all additional costs incurred by the Owner, Engineer, or Engineer Representative.

2. All additional Owner and Engineer costs required to identify the scope and size of defective work and determine necessary corrective

actions, shall be at the sole cost to Contractor. This shall include but not be limited to additional costs for time and expenses, laboratory analyses, additional testing, equipment rental, coating manufacturer site evaluation, recommendation time and laboratory costs, coordination and communication, review and evaluation of repair recommendations, full time observation during the defective work repair, and additional warranty inspection(s) of repair work.

3.13 PRESERVATION, RESTORATION, AND CLEANUP

A. Confine operations to construction easements, work areas described, or as approved by the Owner or Engineer. Protect existing structures, equipment, vehicles, and utilities and keep the work area neat and orderly. Keep the work site free from accumulation of waste materials or rubbish.

B. Control all contamination from surface preparation and coating application. Damage due to surface preparation, coating operations, or overspray on buildings, vehicles, trees, or other surfaces not specified to be coated shall be the sole responsibility of the Contractor.

C. Prevent contamination of the project site or surrounding areas. Do not dump coating materials, spent abrasive, paint debris, waste oil, rubbish, or other similar materials on the ground or in any water way. Use caution to prevent soil, stream, or groundwater contamination. Contractor shall be liable for containment and cleanup or any contamination of any aquifer, stream, or soil at their sole expense.

D. Upon completion of the work, remove all materials, scraps, and debris from project area and from the interior of all structures, pipes, tanks, devices and equipment. Remove staging, scaffolding, and containers from the site or destroy in a legal manner. Leave the work site free of rubbish or excess materials of any kind.

E. The Contractor is solely responsible for containment, packaging, treatment, transportation, and disposal of all debris generated during this work and shall be responsible for all associated costs.

F. Any damage to structures, equipment, utilities, vehicles, nearby facilities, or to the project site resulting from Contractor related work activities shall be promptly corrected by the Contractor. Repairs shall be completed in a timely manner to restore items to preconstruction condition to the Owner's satisfaction by the Contractor at their sole expense.

3.14 PROTECTIVE COATING SYSTEMS APPLICATION SCHEDULE

A. Unless otherwise shown or specified, paint surfaces in accordance with the following Application Schedule. In the event of discrepancies or omissions

in the following, request clarification from the Engineer before starting work in question. The schedule below is not intended to be all-inclusive and some systems may not apply to this project.

B. System No. 3 Concrete Encased or Buried Metal:

1. Use on the following items or areas:

a. Metal surfaces encased in concrete such as wall pipes, pipes, pipe sleeves, access manholes, gate guides and thimbles, and structural steel excluding reinforcing steel.

b. All metal encased in concrete, unless already factory coated with a suitable coating.

2. Other areas where specified or noted on the Drawings.

System No. 3 Surface Prep.	Paint Material	Min. Coats, Cover
Abrasive Blast, or Centrifugal Wheel Blast (SP 6 Commercial)	Prime in accordance with manufacturer's recommendations-epoxy primer	1 Coat, 2 to 4 MDFT
	Coal Tar Epoxy	2 coats, 16 MDFT

C. System No. 5 Exposed Metal-Mildly Corrosive:

1. Use on the following items or areas: Exposed metal surfaces, located inside or outside of structures and exposed to weather or in a humid atmosphere such as pump stations, treatment plant buildings, pipe galleries, vaults, and similar areas and the following specific surfaces:

a. All exterior surfaces of exposed and/or insulated interior and exterior metallic piping, valves, fittings, and appurtenances in vaults, treatment plant buildings, or pump stations.

b. Exterior surfaces of pipe supports and appurtenances.

c. Metal doors and frames, vents, louvers, exterior metal ductwork, flashings, sheet metalwork, and miscellaneous architectural metal trim located inside and outside of pipe galleries, treatment buildings, or vaults.

d. Instrumentation and control systems exposed enclosures for process use in humid areas of pipe galleries, treatment buildings, or vaults.

2. Apply surface preparation and primer and mid-coat to surfaces prior to installation. Finish coats need only be applied to interior surfaces exposed after completion of construction.

3. Do not use on exposed stainless steel, aluminum, or galvanized steel ductwork.

4. Other areas where specified or noted on the Drawings.

System No. 5 Surface Prep.	Paint Material	Min. Coats, Cover
Abrasive Blast, or Centrifugal Wheel Blast (SP 10 Near White)	Polyamide, Anticorrosive Epoxy Primer	1 coat, 2.5 to 3.5 MDFT
	Polyamide, Anticorrosive Epoxy Mid-Coat	1 coat, 3 to 4 MDFT
	Polyurethane Enamel	1 or 2 coats (as required to hide mid-coat), 3 to 4 MDFT

A. System No. 8 Buried Metal – High Temperature:

1. Use on the following items or areas:

a. Buried portions of PA piping, including flexible couplings, valves, fittings, and tapping harnesses associated with buried ALP piping, unless specifically specified to be coated with a different coating system elsewhere in the specifications.

System No 8 Surface Prep.	Paint Material	Min. Coats, Cover
Abrasive Blast or Centrifugal Wheel Blast (SP 6 Commercial)	ALP Tape Coat System: High-Temperature Epoxy and Cold-Applied Tape (both rated for min. 250°F)	1 coat (6-10 mils) 2 layers of tape (min)

B. System No. 10 Galvanized Metal Conditioning:

1. Use on the following items or areas:

   a. Galvanized surfaces requiring top coating.

   b. All galvanized materials shall be top coated prior to immersion service.

   c. After application of System No. 10, apply finish coats as required for exposure or color coding.

   d. Concealed galvanized surfaces do not require painting unless in wet or submerged environments.

2. Other areas where specified or noted on the Drawings.

System No 10 Surface Prep.	Paint Material	Min. Coats, Cover
Solvent Clean (SP 1) Followed by Hand Tool (SP 2) or Power Tool (SP 3) Abrasive Sweep Blast for All Wet or Immersed Galvanized Surfaces	Wash Primer (vinyl butyral acid) or Coating Manufacturer's Recommendation	1 coat, 0.4 MDFT
		Apply Finish Coats as Required For Exposure

C. System No. 11 Galvanized Metal Repair:

1. Prepare surface with System No. 10 as recommended by coating manufacturer; use on the following items or areas:

   a. Galvanized surfaces that are abraded, chipped, or otherwise damaged.

   b. Topcoat if required for color coding or exposure.

2. Other areas where specified or noted on the Drawings.

System No. 11 Surface Prep.	Paint Material	Min. Coats, Cover
Solvent Clean (SP 1) Followed by Hand Tool (SP 2), Power Tool (SP 3), or Brush-off Blast (SP 7)	Organic Zinc Rich Primer	1 coat, 3 MDFT

D. System No. 24 Exposed Fiberglass, PVC:

1. Use on the following items or areas:

   a. Exposed fiberglass or PVC pipe, ducts, or equipment requiring color coding or cosmetic painting.

   b. Exposed chemical feed pumps requiring color coding or cosmetic painting.

   c. As required to protect fiberglass or PVC where exposed to sunlight, including shaded areas.

2. Other fiberglass or PVC items required to be color coded or otherwise specified or shown to be painted.

System No. 24 Surface Prep.	Paint Material	Min. Coats, Cover
Plastic	Polyurethane Enamel	2 coats, 4 mils MDFTPC

E. System No. 25 Interior FRP, PVC:

1. Use on the following items or areas:

   a. Exposed fiberglass or PVC pipe or other items required to be color coded.

2. As required to be color coded or otherwise specified or shown to be painted.

System No. 25 Surface Prep.	Paint Material	Min. Coats, Cover
Plastic	Acrylic Latex	2 coats, 320 SFPGPC

F. System No. 27 Aluminum, Stainless Steel, and Dissimilar Metal Insulation:

1. Use on the following items or areas:

   a. All concrete embedded aluminum or stainless steel surfaces.

   b. Aluminum surfaces fastened to steel or concrete or masonry.

   c. Aluminum access hatch frames.

d. Aluminum grating frames.

e. Aluminum slide gate frame surfaces in contact with concrete.

f. Other areas where specified or noted on the Drawings.

System No. 27 Surface Prep.	Paint Material	Min. Coats, Cover
Solvent Clean (SP 1)	Wash Primer	1 coat, 0.4 MDFT
	Bituminous Paint, Coal Tar Epoxy, or Epoxy	1 or 2 coats, 10 MDFT

G. System No. 29 Fusion Bonded Coating:

1. Use on the following items:

a. Metallic fittings, valves, appurtenances, fasteners, bolts, nuts, and washers as specified or noted on the Drawings.

b. Stainless steel anchor bolts used in submerged or wet areas, to maintain electrical isolation.

2. Other items where specified or noted on the Drawings.

System No. 29 Surface Prep.	Paint Material	Min. Coats, Cover
Abrasive Blast, or Centrifugal Wheel Blast (SP 10) or Acid Pickling (SP 8)	Fusion Bonded 100 percent Solids Epoxy or Polyurethane	1 or 2 coats, 12 to 16 MDFT

3.15 ARCHITECTURAL PAINT SYSTEMS APPLICATION SCHEDULE

A. Provide the following paint systems for the various substrates indicated, unless scheduled or shown otherwise in this section or the Drawings. Paint numbers are based on Benjamin Moore Company's specification manual. Equivalent paint systems from other manufacturers may be used. Note that some architectural systems in this schedule may not be used on this project.

B. Specification Code A: Exposed architectural steel, metal trim, metal doors and frames, railings, grilles, and iron work – Interior and Exterior, Dry or Relatively Non-Corrosive. For shop primed work, omit first coat. Remove all rust and scale.

1. 1st coat: Corotech Metal Rust Inhibitive Primer V110 (3.0 to 4.0 MDFT).

2. 2nd coat: Corotech Acrylic Enamel V330 (2.0 MDFT).

3. 3rd coat: Corotech Acrylic Enamel V330 (2.0 MDFT).

C. Specification Code B: Gypsum board or plaster surfaces – Walls and Ceilings:

1. 1st coat: Latex WB Primer N372 (1.2 MDFT).

2. 2nd coat: Semi-Gloss WB Enamel (1.5 MDFT).

3. 3rd coat: Semi-Gloss WB Enamel (1.5 MDFT).

D. Specification Code C: Concrete and concrete masonry units:

1. 1st coat: Corotech Epoxy Pre-Primer V 155 (2.5 MDFT).

2. 2nd coat: Corotech Acrylic Epoxy V450 (1.3 MDFT).

3. 3rd coat: Corotech Acrylic Epoxy V450 (1.3 MDFT).

E. Specification Code D: Painting of Mechanical and Electrical Items (NOTE - Paint grilles at exterior):

1. Interior Areas: All piping, lighting panels, conduits, ducts, etc., exposed in finished areas of the building to be painted the same color as the adjacent walls or ceilings, except piping to be color coded.

2. Exterior Areas: All piping, stacks, grilles, or other items of electrical or mechanical equipment, exposed on the exterior of the building, and not factory finished, to be painted as directed by the Engineer.

3. Paint as specified in Division 23 00 00, 26 00 00, or Division 40 00 00. If not specified in these divisions, paint per System No. 5 as specified hereinbefore.

END OF SECTION 09 90 00

PART 1 GENERAL

1.01 WORK INCLUDED

A. This section covers the work necessary to furnish and install gypsum board assemblies, complete.

1.02 GENERAL REQUIREMENTS

A. See CONDITIONS OF THE CONTRACT and Division 1, GENERAL REQUIREMENTS, which contain information and requirements that apply to the work specified herein and are mandatory for this project.

1.03 SUBMITTALS

A. Submittals shall be made in accordance with Section 01300, SUBMITTALS in Division 1, GENERAL REQUIREMENTS.

B. Submit product data for each product specified.

PART 2 PRODUCTS

2.01 GYPSUM BOARD, GENERAL

A. Size: Provide maximum lengths and widths available that will minimize joints in each area and that correspond with support system indicated.

2.02 INTERIOR GYPSUM BOARD

A. Gypsum Wallboard: ASTM C1396/C1396M.

1. Available Manufacturers: Subject to compliance with requirements, manufacturers offering products that may be incorporated into the Work include, but are not limited to, the following:

a. American Gypsum Co.
b. BPB America Inc.
c. G-P Gypsum.
d. Lafarge North America Inc.
e. National Gypsum Company.
f. PABCO Gypsum.
g. Temple.
h. USG Corporation.

2. Thickness: 5/8 inch (12.7 mm).

3. Long Edges: Tapered.

B. Gypsum Ceiling Board: ASTM C1396/C1396M.

1. Available Manufacturers: Subject to compliance with requirements, manufacturers offering products that may be incorporated into the Work include, but are not limited to, the following:

a. American Gypsum Co.
b. BPB America Inc.
c. G-P Gypsum.
d. Lafarge North America Inc.
e. National Gypsum Company.
f. PABCO Gypsum.
g. Temple.
h. USG Corporation.

2. Thickness: 5/8 inch (12.7 mm).

3. Long Edges: Tapered.

2.03 TRIM ACCESSORIES

A. Interior Trim: ASTM C1047.

1. Material: Galvanized or aluminum-coated steel sheet, rolled zinc, plastic, or paper-faced galvanized-steel sheet.

2. Shapes:

a. Cornerbead.
b. LC-Bead: J-shaped; exposed long flange receives joint compound.
c. Expansion (control) joint.

2.04 JOINT TREATMENT MATERIALS

A. General: Comply with ASTM C475/C475M.

B. Joint Tape:

1. Interior Gypsum Board: Paper.

C. Joint Compound for Interior Gypsum Board: For each coat, use formulation that is compatible with other compounds applied on previous or for successive coats.

1. Prefilling: At open joints, rounded or beveled panel edges, and damaged surface areas, use setting-type taping compound.

2. Embedding and First Coat: For embedding tape and first coat on joints, fasteners, and trim flanges, use setting-type taping compound.

   a. Use setting-type compound for installing paper-faced metal trim accessories.

3. Fill Coat: For second coat, use setting-type, sandable topping compound.

4. Finish Coat: For third coat, use setting-type, sandable topping compound.

2.05 AUXILIARY MATERIALS

A. Provide auxiliary materials that comply with referenced installation standards and manufacturer's written instructions.

B. Steel Drill Screws: ASTM C1002 unless otherwise indicated.

1. Use screws complying with ASTM C954 for fastening panels to steel members from 0.033 to 0.112 inch (0.84 to 2.84 mm) thick.

2. For fastening cementitious backer units, use screws of type and size recommended by panel manufacturer.

C. Thermal Insulation: As specified in Section 07 21 00, BUILDING INSULATION.

D. Vapor Retarder: As specified in Section 07 26 00, VAPRO RETARDERS.

PART 3 EXECUTION

1.05 DELIVERY, STORAGE, AND HANDLING

A. Deliver materials in original packages, containers or bundles bearing name and identification of manufacturer and supplier.

B. Store materials inside under cover and keep dry and protected against damage from weather, direct sunlight, surface contamination and other causes. Neatly stack gypsum panels on edge or flat to prevent sagging.

1.06 PROJECT CONDITIONS

C. Environmental conditions, general: Establish and maintain environmental conditions for applying and finishing gypsum board to comply with ASTM C 840 requirements or gypsum board manufacturer’s recommendations, whichever are most stringent.

D. Ventilate building spaces as required to dry joint treatment materials. Avoid drafts during hot, dry weather to prevent finishing materials from drying too rapidly.

3.02 INSTALLATION AND FINISHING OF PANELS

A. Examine panels before installation. Reject panels that are wet, moisture damaged, and mold damaged.

B. Comply with ASTM C840.

C. Isolate perimeter of gypsum board applied to non-load-bearing partitions at structural abutments. Provide 1/4- to 1/2-inch- (6.4- to 12.7-mm-) wide spaces at these locations and trim edges with edge trim where edges of panels are exposed. Seal joints between edges and abutting structural surfaces with acoustical sealant.

D. For trim with back flanges intended for fasteners, attach to framing with same fasteners used for panels. Otherwise, attach trim according to manufacturer's written instructions.

E. Prefill open joints, rounded or beveled edges, and damaged surface areas.

F. Apply joint tape over gypsum board joints, except for trim products specifically indicated as not intended to receive tape.

G. Gypsum Board Finish Levels: Finish panels to levels indicated below and according to ASTM C840:

1. Level 4: At panel surfaces that will be exposed to view unless otherwise indicated.

a. Primer and its application to surfaces are specified in Section 09 91 23 "Interior Painting."

H. Glass-Mat Gypsum Sheathing Board: Finish according to manufacturer's written instructions for use as exposed soffit board.

I. Glass-Mat Faced Panels: Finish according to manufacturer's written instructions.

J. Cementitious Backer Units: Finish according to manufacturer's written instructions.

3.03 PROTECTION

A. Protect installed products from damage from weather, condensation, direct sunlight, construction, and other causes during remainder of the construction period.

B. Remove and replace panels that are wet, moisture damaged, and mold damaged.

END OF SECTION 09 29 00

(This page left intentionally blank.)

PART 1 GENERAL

1.01 WORK INCLUDED

A. This section covers the work necessary to furnish and install, complete, the identifying devices. This includes all identification, information, emergency, warning, and hazardous material signs and their mounting requirements.

1.02 GENERAL

A. Like items of materials specified hereunder shall be the end products of one manufacturer to achieve standardization for appearance, maintenance, and replacement.

B. See CONDITIONS OF THE CONTRACT and Division 01 00 00, GENERAL REQUIREMENTS, which contain information and requirements that apply to the work specified herein and are mandatory for this project.

C. Signs shall be furnished and erected at the locations shown or specified herein, complete with all hardware and accessories.

D. All signs required by this section shall be provided by manufacturing firms regularly engaged in the production of signs of this type. Lettering and graphics shall be clean, neatly aligned and highly legible. Signs with rough edges, flaws, misaligned letters or other indications of poor workmanship will be rejected.

1.03 SUBMITTALS

A. Submittals shall be made in accordance with Section 01 33 00, SUBMITTALS in Division 01 00 00, GENERAL REQUIREMENTS. In addition, the following specific information shall be provided:

1. Shop Drawings: Provide drawings and manufacturer's literature showing layouts, dimensions, letter sizes and styles, colors, and mounting details.

2. Layout and installation details.

PART 2 PRODUCTS

2.01 GENERAL

A. The use of a manufacturer's name and model or catalog number is for establishing the standard of quality and general configuration desired only. Products of other manufacturers will be considered in accordance with the General Conditions.

2.02 SIGNS

A. Safety (Warning, Caution, Danger) Signs (Type A):

1. Baked enamel finished 20-gauge (minimum) steel or 18-gauge (minimum) aluminum signs, as manufactured by Seton Corporation; Nutheme Safety Signs and Labels; or equal. Provide reflective signs for outdoor locations and non-reflective signs for interior locations.

2. Text, colors, and sizes as indicated on the Safety Sign Schedule hereinafter and conforming to OSHA requirements.

B. Safety Sign Schedule: See schedule below for sign details. Detail number refers to the Standard Details shown on the Drawings.

SAFETY SIGN TYPE	DETAIL NUMBER	TEXT	QUANTITY
WARNING	10134	THIS EQUIPMENT STARTS AND STOPS AUTOMATICALLY	At all equipment that is started remotely or automatically (2 minimum)
CAUTION	10136	HOT AIR	At all exposed blower vents and discharges, including exterior (2 minimum per building)
CAUTION	10136	HEARING PROTECTION REQUIRED IN THIS ROOM	1 in each Blower Building

C. Informational Signs (Type B):

1. Exterior: Laminated plastic subsurface image type, 3/16-inch thick with high-gloss finish.

2. Interior: Plastic, 1/8-inch thick with nondirectional matte finish and engraved letters.

3. Red background with white lettering.

D. Informational Sign Schedule: See schedule below for sign details.

LOCATION	SIZE	TEXT
Not used		

E. Special Safety and Equipment Signs (Type C): Special safety and equipment signs shall be 14-inch by 10-inch by 1/8-inch aluminum or plastic plate; Seton Corporation; Nutheme Safety Signs and Labels; or equal. Suitable for interior and exterior locations. Signs shall have white engraved lettering on non-fade green background or red engraved lettering on non-fade white background, per manufacturer's recommendations. The following signs shall be provided, titled as indicated. Letter height shall be a minimum of 3/4-inches.

LOCATION	TEXT	QUANTITY
Above all fire extinguishers	"FIRE EXTINGUISHER"	As Required
Above all first aid cabinets	"FIRST AID KIT"	As Required

F. Restricted Access Signs (Type D): Restricted access signs shall be self-adhesive plastic signs, flexible enough to apply to uneven surface; adhesive shall be long lasting industrial and be rated for interior humid environments. Signs shall be round with a red "not allowed" symbol over the image of a forklift. Text shall read "CAUTION – NO FORKLIFT AREA."

LOCATION	TEXT	QUANTITY
Not used.		

G. Exit Signs (Type E): Aluminum or plastic, 1/8-inch (minimum) thickness with 6-inch high, 3/4-inch stroke, red letters on white phosphorescent background. Signs shall be single faced, wall mounted, 7 inches by 10 inches. Provide a quantity of 6 and locate at all exterior doors and appropriate interior doors. Signs shall be Seton Exit Signs, or approved equal. Also provide illuminated exit signs as specified in Division 26 00 00, ELECTRICAL.

H. Special Structural Signs (Type F): Special structural signs shall be aluminum plate Seton Corporation Specialty Signs or approved equal. Suitable for interior and exterior locations. Signs shall have black engraved lettering on non-fade white background. The following signs shall be provided, titled as indicated. Letter height shall be a minimum of 2 inches.

LOCATION	TEXT	QUANTITY
Not used		

2.03 IDENTIFICATION LABELS

A. Piping identification labels shall be provided as specified in Section 09 90 00, PAINTING.

B. Equipment Labels: Equipment labels shall contain black lettering on a yellow or orange background. The labels shall be 2 inches minimum and 4 inches maximum high by 8 inches minimum and 12 inches maximum long. The lettering shall be bold face and 3/4-inch minimum high. The label shall be plastic or aluminum material, minimum 1/16-inch thickness, that is suitable for use on wet, oily, exposed, abrasive, and corrosive areas. Alternatively, the labels may be fiberglass with fiberglass encased lettering. Leave a 1-inch margin on each end of the label for mounting. Fiberglass labels shall be grommeted at each end for mounting. All labels shall have the same size base dimensions. The label wording shall be as shown hereinafter. The labels shall be Style No. AV0175 by Seton Corporation; equivalent as manufactured by Brady Worldwide Inc.; or equal.

C. Provide labels for valves, gates, instrumentation, and all screening system components.

2.04 EXTERIOR BUILDING SIGNS

A. Provide exterior building signs in accordance with the following:

1. Character Font: Helvetica Medium or as selected by Owner.

2. Character Case: Upper case only.

3. Brushed aluminum background base, 12 inches in height. Wrapped/stacked text will be accepted on building that do not have adequate available exterior wall space for single line text as determined by Engineer during the submittal review process.

4. Letters: 8 inches in height, 3/8-inch thick black anodized aluminum letters attached to base with concealed fasteners.

5. Attach with concealed fasteners.

6. Location of exterior signs as listed below and as directed by Owner or Engineer.

7. Exterior Building Sign Schedule:

LOCATION	NUMBER	TEXT
Near north single door entrance	1	AERATION BASIN BLOWER BUILDING
Near south single door entrance	1	DIGESTER BLOWER BUILDING

2.05 EXTERIOR DOOR SIGNS

A. Provide exterior door signs in accordance with the following:

1. Character Font: Helvetica Medium or as selected by Owner.

2. Character Case: Upper case only.

3. Brushed aluminum background base, 4 inches in height.

4. Letters: 3 inches in height, black anodized aluminum letters attached to base with concealed fasteners.

5. Attach with concealed fasteners.

6. Location of exterior door signs as listed below on the handle side of person doors and as directed by Owner or Engineer.

7. Exterior Door Sign Schedule:

LOCATION	NUMBER	TEXT
Aeration Blower Building north side single door (east)	1	BLOWER ROOM
Aeration Blower Building south side single door	1	PLENUM ROOM
Aeration Blower Building north side single door (west)	2	ELECTRICAL ROOM
Digester Blower Building south side single door (west)	1	BLOWER ROOM
Digester Blower Building north side single door	1	PLENUM ROOM
Digester Blower Building south side single door (east)	1	ELECTRICAL ROOM

PART 3 EXECUTION

3.01 DELIVERY, STORAGE, AND HANDLING

A. Deliver and store materials in manufacturer's original, unopened, undamaged containers. Protect materials from moisture and dust by storing in clean, dry, location remote from construction operations area.

B. Handle materials in such a manner as to prevent damage to products or finishes.

3.02 INSTALLATION

A. Installation of identifying devices shall be as recommended by the manufacturer and located in accordance with the Drawings, as specified herein, or as directed by the Engineer and/or the Owner's representative. Contractor shall furnish such incidental materials and labor as required for proper, secure mounting that is level and plumb.

B. Use manufacturer's installation templates and attachment devices. Install signs after doors and other substrate surfaces are finished.

C. Do not install tape adhesive when ambient temperature is lower than recommended by manufacturer. Maintain this minimum temperature during and after installation of signs using adhesive.

3.03 SIGNS

A. General: Locate and securely mount signs where indicated on Drawings, or specified hereinbefore and/or hereinafter. Fasten to walls or posts with stainless steel screws or other fasteners.

B. Safety Signs:

1. Install safety signs on steel or aluminum posts, walls, doors, piping, or equipment in a location that will allow high visibility but a minimum restriction of the working area around walkways and equipment. Signs shall be installed without damaging structures or equipment such that they are removable with ordinary hand tools without leaving scars on the structure or equipment. Fasteners shall be stainless steel.

2. Install signs with the legend STARTS AND STOPS AUTOMATICALLY near equipment and motors that are remote or automatically controlled. Install NONPOTABLE WATER - NOT FOR DRINKING signs near each indoor and outdoor hose valve or hose bibb. Install other safety signs as directed by the Engineer or Owner's

representative. Obtain the approval of the Engineer for the location of each sign and the mounting method to be used before installation.

3. Where appropriate, mount each sign on a 2-inch diameter galvanized steel pipe post using two 1/4-inch aluminum or stainless steel bolts. Install facing foot traffic at locations and in manner indicated on Drawings or in ANSI D6.1.

3.04 EQUIPMENT LABELS

A. Install the equipment labels on the equipment or concrete equipment base. The labels shall be securely fastened to the equipment or base with 1/8- to 1/4-inch diameter stainless steel bolts or anchor bolts. The nameplate anchors shall be readily removable and replaceable with a wrench, pliers, or screwdriver.

B. Chlorinator Room Equipment Labels: Install labels in locations shown on the Drawings or as directed by the Engineer. The labels shall be firmly installed on the substrate, but they shall be removable and re-installable with ordinary hand tools.

3.05 FACILITY ENTRANCE MARKER

A. Fabricate and erect marker in accordance with the Drawings, reviewed shop drawings and samples, and these specifications.

3.06 FACILITY NAME PLAQUE

A. Securely mount plaque where directed by Owner’s representative and Engineer. Mount with concealed fasteners.

3.07 DOOR NAMEPLATES AND PICTORIAL SYMBOLS

A. Attach to doors with Phillips head screws. Mount with bottom of sign at 5 feet 6 inches off floor.

3.08 CLEANING AND PROTECTION

A. After installation, clean soiled sign surfaces according to the manufacturer's written instructions. Protect signs from damage until final acceptance by the Owner.

END OF SECTION 10 14 00

(This page intentionally left blank)

PART 1 GENERAL

1.01 WORK INCLUDED

A. This section covers the work necessary to furnish and install, complete, portable fire extinguishers and cabinets, first-aid kits, personal protective equipment, and other safety equipment.

1.02 GENERAL

A. Like items of materials specified hereunder shall be the end products of one manufacturer to achieve standardization for appearance, maintenance, and replacement.

B. See CONDITIONS OF THE CONTRACT and Division 01 00 00, GENERAL REQUIREMENTS, which contain information and requirements that apply to the work specified herein and are mandatory for this project.

C. Safety equipment shall be furnished and erected at the locations shown or specified herein, complete with all hardware and accessories.

D. All safety equipment required by this section shall be provided by manufacturing firms regularly engaged in the production of equipment of this type.

1.03 SUBMITTALS

A. Submittals shall be made in accordance with Section 01 33 00, SUBMITTALS. In addition, the following specific information shall be provided:

1. Manufacturer's Literature: Catalog data for each item including sizes, ratings, UL listings or other certifications, and mounting information.

PART 2 PRODUCTS

2.01 GENERAL

A. The use of a manufacturer's name and model or catalog number is for establishing the standard of quality and general configuration desired only. Products of other manufacturers will be considered in accordance with the General Conditions.

2.02 PORTABLE FIRE EXTINGUISHERS

A. General:

1. Manufacturers: Products of the following, or equal, meeting these specifications, may be used on this project:

    a. Amerex Corporation.
    b. Ansul Company.
    c. General Fire Equipment Company.
    d. J.L. Industries.
    e. Kidde Fire Systems.
    f. Larsen's Manufacturing Company.
    g. Potter Roemer Fire Pro.

2. All Extinguishers:

    a. UL listing and meeting the requirements of NFPA 10, Standard for Portable Fire Extinguishers.
    b. Charged and ready for service.

B. Multi-Purpose Hand Extinguisher (F. Ext-1):

1. Tri-class dry chemical extinguishing agent.

2. Pressurized, red enameled steel shell cylinder.

3. Activated by top squeeze handle.

4. Agent propelled through hose or opening at top of unit.

5. For use on A, B, and C class fires.

6. Provide heavy duty brackets with clip together strap for wall mounting for all extinguishers not mounted in cabinets.

7. Minimum UL Rating and Capacity: 4A-60B:C, 10-pound capacity.

C. Minimum Quantity Provided and Locations:

1. Electrical Rooms (2)

2. Blower Rooms (2)

2.03 FIRST-AID CABINETS AND SUPPLIES

A. General: Meet the requirements of OSHA and applicable state and local requirements.

B. Manufacturers: Afassco, Inc.; Johnson & Johnson; Zee Medical Services; or equal.

C. Cases:

1. Enameled metal or break-resistant plastic.

2. Carrying handles.

3. Made to hang on wall.

D. Supplies: Quantities to serve 10 people.

E. Minimum Quantity to be Provided:

1. Electrical Rooms (2)

2.04 FASTENINGS

A. Provide necessary stainless steel screws, bolts, and other corrosion resistant fastenings of suitable type and size to secure items of fire and safety equipment in position.

B. Provide metal expansion shields for machine screws at concrete and masonry.

PART 3 EXECUTION

3.01 DELIVERY, STORAGE, AND HANDLING

A. Deliver products in manufacturer's original, unopened protective packaging.

B. Store and handle products in accordance with manufacturer's instructions to protect them from damage.

3.02 INSTALLATION

A. Install where indicated and in accordance with the manufacturer's recommendations.

B. Plumb and level equipment.

C. Rigidly attach cabinets and brackets to structure.

D. Provide adequate backing for mounting surfaces.

3.03 PORTABLE FIRE EXTINGUISHERS

A. Provide at locations shown or as directed by the Engineer.

B. Mount hangers and/or cabinets securely in position, in accordance with manufacturer's recommendations.

C. Handle or Top of Extinguisher: No more than 4 feet above the floor.

3.04 FIRST AID CABINETS

A. Assemble following manufacturer's instructions and locate where shown on Drawings or as directed by Engineer.

END OF SECTION 10 43 52

PART 1 GENERAL

1.01 WORK INCLUDED

A. This section covers the general requirements necessary for plumbing and/or HVAC work on this project. The requirements in this section are supplemental to the requirements specified in Division 01 00 00, GENERAL REQUIREMENTS.

1.02 GENERAL

A. Also see the GENERAL CONDITIONS and Division 01 00 00, GENERAL REQUIREMENTS, which contain information and requirements that apply to the work specified herein and are mandatory for this project.

B. It shall be the responsibility of the plumbing and mechanical sub-contractor(s) to examine and refer to all architectural, civil, structural, electrical, and/or landscape Drawings and specifications for construction conditions which may affect the scope of plumbing and HVAC work. Inspect the building site and existing facilities for verification of present conditions. Make proper provisions for these conditions in performance of the work and cost thereof.

C. Plumbing and mechanical work for this project shall include all items, articles, materials and the associated labor mentioned, scheduled or shown in these specifications and in the accompanying Drawings.

D. Furnish and install all equipment, materials and any required incidental items required by good practice to complete the systems described on the Drawings or in the project specifications.

1.03 CODES AND STANDARDS

A. Work shall meet the requirements of the Drawings and specifications and shall not be less than the minimum requirements of applicable sections of the latest codes and standards of the following organizations:

1. American Gas Association (AGA).

2. American Society of Heating, Refrigeration and Air Conditioning Engineers (ASHRAE).

3. American Society of Mechanical Engineers (ASME).

4. Sheet Metal and Air Conditioning Contractors' National Association Inc. (SMACNA).

5. American Water Works Association (AWWA).

6. National Electrical Code (NEC).

7. National Electrical Manufacturers Association (NEMA).

8. National Fire Protection Association (NFPA).

9. Uniform Plumbing Code (UPC).

10. Occupational Safety and Health Act (OSHA).

11. Plastic Pipe Institute (PPI).

12. International Mechanical Code (IMC).

13. International Fuel Gas Code (IFGC).

14. International Building Code (IBC).

15. International Energy Conservation Code (IECC).

16. Requirements of the Serving Utility Company.

17. Local and State Codes and Ordinances.

1.04 FEES AND PERMITS

A. The plumbing and mechanical sub-contractors shall pay all fees and arrange all permits required for work done under their contract and under their supervision by sub-contract.

B. All usage contracts between the Owner and the serving utilities company, such as membership and usage charges or fees, and other similar items, for the purpose of obtaining the services for the utility company shall be applied for and paid for by the Owner.

1.05 INTENT OF DRAWINGS

A. The Drawings are diagrammatic and do not necessarily show exact locations of piping and ductwork unless specifically dimensioned. Riser and other diagrams are schematic and do not necessarily show the physical arrangement of the equipment. They shall not be used for obtaining lineal runs of piping or ductwork, nor shall they be used for shop drawings for piping and ductwork fabrication or ordering. Discrepancies shown on

different Drawings, or between the Drawings and actual field conditions, shall be brought to the attention of the Engineer for resolution.

1.06 RESPONSIBILITY

A. Plumbing and HVAC work shall conform to the requirements of all Division 22 00 00, PLUMBING and Division 23 00 00, HEATING, VENTILATING, AND AIR CONDITIONING (HVAC) specifications.

B. The plumbing and mechanical sub-contractors shall be responsible for the installation of a satisfactory and complete system in accordance with the intent of the Drawings and specifications. Provide at no extra cost all incidental items, materials, accessories and labor required for completion of the work even though they are not specifically mentioned or indicated on the Drawings or in the specifications.

C. The Drawings do not attempt to show complete details of the building construction which affect the mechanical and plumbing installation; and reference is therefore required to the architectural, civil, structural, landscape and electrical Drawings and specifications and to shop drawings of all trades for additional details which affect the installation of the work covered under these Divisions of the Contract Documents.

D. Location of mechanical and plumbing system components shall be checked for conflicts with openings, structural members, and components of other systems having fixed locations. In the event of any conflicts, the Engineer shall be consulted and their decision shall govern. Necessary changes shall be made at the Contractor’s and sub-contractor’s expense.

E. Determine, and be responsible for, the proper location and character of inserts for hangers, chases, sleeves, and other openings in the construction required for the work, and obtain this information well in advance of the construction progress so work will not be delayed.

F. Final location of inserts, hangers, and other similar items required for each installation, must be coordinated with facilities required for other installations to prevent interference.

G. Take extreme caution not to install work that connects to equipment until complete shop drawings of such equipment have been approved by the Engineer. Any work installed by the Contractor or sub-contractors, prior to approval of shop drawings, will be at the Contractor's and sub-contractor’s risk.

H. All modifications and changes required due to installation of equipment other than the scheduled equipment shall be made at the Contractor's and sub-contractor's expense.

I. It shall be the responsibility of the installing Contractor or sub-contractor to coordinate changes to work by other trades that result from the installation of equipment other than the scheduled equipment.

J. If the provided equipment is heavier or larger than the scheduled or specified equipment, it shall be the responsibility of the installing Contractor or sub-contractor to coordinate the required structural changes and pay for any and all associated costs.

K. If the provided equipment has different motor characteristics or electrical requirements than the scheduled or specified equipment, it shall be the responsibility of the installing Contractor or sub-contractor to coordinate the required changes and pay for any and all associated costs.

L. If larger or additional electrical conduits, wire, or breakers are required due to the installation of equipment other than the scheduled or specified equipment, it shall be the responsibility of the installing Contractor or sub-contractor to coordinate the required changes and pay for any and all associated costs.

M. If the provided equipment requires different fluid flow rates than the scheduled or specified equipment, it shall be the responsibility of the installing Contractor or sub-contractor to coordinate all required changes including but not limited to pumps, piping, valves, or other similar items and pay for any and all associated costs.

N. At all times during the performance of this Contract, properly protect work from damage and protect the Owner's property from injury of loss. Make good any damage, injury or loss, except such as may be directly due to errors in the Contract Documents or caused by agents or employees of the Owner. Adequately protect adjacent property as provided by law and the Contract Documents. Provide and maintain passageways, guard fences, lights and other facilities for protection required by public authority or local conditions.

O. The Contractor shall be ultimately responsible for damages incurred due to the work of their sub-contractors, to the building or its contents, people, equipment, and other items.

1.07 REVIEW

A. All work and materials are subject to review at any time by the Owner, Engineer, or their representative(s). If the Owner, Engineer, or their representative finds any material that does not conform to these specifications or that is not properly installed or finished, correct the deficiencies in a manner satisfactory to the Owner or Engineer at the Contractor's or sub-contractor's expense.

1.08 SUBMITTALS

A. Submittals will be required as specified in Section 01 33 00, SUBMITTALS and hereinafter for each piece of equipment, material, or product as noted in the table below. All submittals shall be submitted, reviewed and all discrepancies addressed prior to ordering equipment or starting work. Any equipment ordered without having first completed the submittal process is done at the risk of the Contractor and sub-contractors. Any work performed prior to completing the submittal process is done at the risk of the Contractor and sub-contractors.

Specification Section	Product Data	Performance Data	Shop Drawing	Delegated Design	Wiring Diagram	Color Chart	Sustainability Compliance	Notes
23 05 93								Provide T&B Certifications
23 07 13	X							
23 31 13	X							
23 33 00	X	X						
23 33 30	X	X						
23 37 13	X	X						
23 72 00	X	X			X		X	

B. Submittal Definitions:

1. Product Data: Provide manufacturers' cut sheets that include general product information including but not limited to, model number, physical data, nominal capacities, and rough-in requirements.

2. Performance Data: Provide detailed performance and capacities based on project specific requirements; including but not limited to; flow rates, capacities, pressure loss, temperatures, fan curves, pump curves, part load performance, sound data, and electrical characteristics.

3. Shop Drawings: Provide detailed drawings of the equipment showing overall dimensions, location of electrical and piping connections, location of anchorage points, location of electrical and control panels, and all operating, service, and maintenance clearances.

4. Delegated Design: Provide detailed drawings prepared and stamped by a registered Professional Engineer that detail pertinent design criteria, the materials and products to be installed, and the required installation locations.

5. Wiring Diagrams: Provide diagrams that identify and detail required field wiring.

6. Color Charts: Provide a physical color chart of material samples required for selection of equipment colors.

C. Submittal Formats:

1. Include the following information with each submittal:

a. Project Name
b. Submittal Date
c. Name of Architect
d. Name of Engineer
e. Name of General Contractor
f. Name of Sub-Contractor
g. Name of firm or entity that prepared the submittal
h. Unique Submittal Number
i. Type of Submittal
j. Specification Section
k. Name or mark of equipment or material and detail or Drawings reference.

2. All submittals, with the exception of color charts or material samples, shall be electronically transmitted PDFs.

D. Submittal Requirements:

1. Submittals shall be submitted as a complete specification section. The submittal must include all materials and equipment for that specification section. Submittals for individual materials of equipment will be rejected without review.

2. Submittals shall be complete, clearly show item used, size, dimensions, capacity, rough in, and other items as required for a complete check and installation. Manufacturer's literature showing

more than one item shall be clearly marked as to which item is being furnished or it will be rejected and returned without review.

3. Each submittal shall be thoroughly checked by the Contractor and sub-contractor for compliance with the Contract Document requirements, accuracy of dimensions, relationship to the work of other trades, and conformance with sound, safe practices as to erection and installation. Each submittal shall then bear a stamp evidencing such checking and shall show corrections made, if any. Submittals requiring extensive corrections shall be revised before submission. Each submittal not stamped and signed by the Contractor and sub-contractor evidencing such checking will be rejected and returned without review.

4. On each submittal, clearly indicate deviations from requirements in the Contract Documents, including minor variations and limitations. Include relevant additional information and revisions, other than those requested on previous submittals. Indicate by highlighting on each submittal or noting on attached separate sheet.

E. Review of the shop drawings and literature by the Engineer shall not relieve the Contractor and/or sub-contractors for responsibility for deviations from the Drawings or specifications, nor shall it relieve the Contractor and/or sub-contractors from responsibility for errors in the shop drawings or literature. It is the responsibility of the Contractor and their sub-contractors to provide materials and equipment which meet the specifications and job requirements.

1.09 OPERATION AND MAINTENANCE (O&M) MANUALS

A. Operation and Maintenance Manuals shall conform to the requirements of Section 01 77 00, CONTRACT CLOSEOUT. In addition, they shall specifically contain the following items at a minimum:

1. Names and contact information for the **>** Project Engineer.

2. Names and contact information for the General Contractor

3. Names and contact information for sub-contractors.

4. Installation, maintenance, and operating instructions for each piece of equipment.

5. Parts lists.

6. Wiring diagrams.

7. Equipment start-up and inspection certificates.

8. Test and Balance Reports.

9. Copies of equipment warranties.

10. Copies of submittals.

11. Record Drawings.

B. Prior to substantial completion, submit an electronic copy of the O&M Manuals in PDF format to the Engineer and Owner for review and approval. The PDF shall be one file with an index and hyperlinks to each section. Individual bound PDFs without automated navigation will be rejected. All O&M data shall be grouped by the equipment type and ordered by the specification numbering.

C. Prior to final payment, a final electronic copy of the O&M Manuals on an archival quality DVD as well as two printed copies shall be furnished to the Engineer for the Owner. Printed copies shall have commercial quality 8-1/2-inch x 11-inch three-ring binders with tabbed dividers for each section.

1.10 RECORD DRAWINGS

A. Record drawings shall be prepared and submitted as specified in Section 01 77 00, CONTRACT CLOSEOUT and as specified hereinafter.

B. The Contractor and their sub-contractors shall furnish to the Owner and Engineer a marked print showing the location of all concealed or underground pipe or conduit runs and other equipment installed other than as shown on the Drawings. Dimension underground lines from established building lines. Indicate all installed pull boxes in conduit runs.

C. The Contractor and their sub-contractors shall furnish to the Engineer a marked print showing the location of all mechanical equipment, plumbing fixtures, piping, ductwork, diffusers, grilles, and other similar items installed on this project. The location of any item which deviates from the Contract Documents shall be accurately drawn and dimensioned.

D. All underground piping and ductwork shall be dimensioned from the nearest column and/or exterior walls. The location of all maintenance related items, such as duct access doors, fire dampers, isolation valves, filters, and similar items shall be highlighted on the record drawing.

1.11 WARRANTY AND GUARANTEES

A. Unless specified otherwise in individual specification sections, the Contractor and their sub-contractors shall warrant all components of the plumbing and HVAC systems against defects in workmanship and materials for **1 year** from the date of Substantial Completion.

B. The Contractor and their sub-contractors shall guarantee that all materials and labor installed are new and of first quality and that any material or labor found defective shall be replaced without cost to the Owner within the above specified warranty period. The guarantee shall list the date of the beginning of the warranty period, which shall be the date that the Substantial Completion Certificate is issued.

C. Any damage to the building(s), caused by defective work or material of the Contractor or their sub-contractors within the above-mentioned period, shall be satisfactorily repaired without cost to the Owner.

D. The guarantee does not include maintenance of equipment. The Owner will accept full responsibility for proper operation and maintenance of equipment immediately upon substantial completion and occupancy of the building.

E. Final acceptance by the Owner will not occur until all operating instructions are mounted in equipment rooms designated by the Owner and Owner's operating personnel are thoroughly trained in the operation of all mechanical equipment by the Contractor and/or subcontractors.

F. No equipment installed as part of this project shall be used for temporary heat during construction.

PART 2 PRODUCTS

2.01 MATERIALS AND EQUIPMENT

A. Manufacturer's trade names and catalog numbers listed are intended to indicate the quality of equipment or materials desired. Manufacturers not listed in the specification will be considered substitutions and must have prior approval.

B. See the General Conditions and Division 01 00 00, GENERAL REQUIREMENTS for substitution procedures. Requests for substitution are to be submitted sufficiently ahead of any deadline, to give ample time for examination. Prior approval request for substitution must indicate the specific item or items to be furnished in lieu of those scheduled, together

with complete technical and comparative data on scheduled items and items proposed for substitution.

C. Mechanical equipment may be installed with manufacturer's standard finish and color except where specific color, finish or choice is indicated. If the manufacturer has no standard finish, equipment shall have a prime coat and two finish coats of gray enamel.

D. High Altitude Operation: Capacity of all equipment shall be sized and manufactured to perform at the elevation of the project site. If not specifically indicated in the equipment schedule or in the specifications, provide all required accessories and equipment for proper operation at the elevation of the project site.

E. The Contractor and their sub-contractors shall be responsible for materials and equipment installed under this contract. Contractor and sub-contractors shall also be responsible for the protection of materials and equipment of others from damage as a result of their work.

F. Manufactured materials and equipment shall be applied, installed, connected, erected, used, cleaned and conditioned as directed by the manufacturer unless herein specified to the contrary.

G. The plumbing and HVAC sub-contractors shall make the required arrangement with the Contractor for the introduction into the building of equipment too large to pass through finished openings.

H. Store materials and equipment indoors at the job site. If this is not possible, store on raised platforms and protect from the weather by means of waterproof covers. Coverings shall permit circulation of air around the materials to prevent condensation of moisture. Screen or cap openings in equipment to prevent the entry of vermin.

PART 3 EXECUTION

3.01 PREPARATION FOR SHIPMENT

A. Insofar as is practical, the equipment specified in Division 22 00 00, PLUMBING and Division 23 00 00, HEATING, VENTILATING, AND AIR CONDITIONING (HVAC) shall be factory assembled. The parts and assemblies that are of necessity shipped unassembled, shall be packaged and tagged in a manner that will protect the equipment from damage and facilitate the final assembly in the field. Generally, machined and unpainted parts shall be protected from damage by the elements with the application of a strippable protective coating.

3.02 WORKMANSHIP

A. Work under this contract shall be performed by workmen skilled in the particular trade, including work necessary to properly complete the installation in a workmanlike manner to present a neat and finished appearance.

B. Obtain the Engineer's approval before performing any cutting on structural members or patching of building surfaces. Any damage to the building or equipment by the mechanical or plumbing sub-contractor shall be the responsibility of the mechanical or plumbing sub-contractor and shall be repaired by skilled craftsmen of the trades involved at the Contractor’s or sub-contractor’s expense.

C. Chases, openings, sleeves, hangers, anchors, recesses, equipment pads, and framing for equipment shall be provided by others only if so noted on the Drawings or other specifications of these Contract Documents. Otherwise, they will be provided by the mechanical or plumbing sub-contractor for their work.

3.03 COORDINATION

A. The mechanical and plumbing sub-contractors shall plan their work to proceed with a minimum interference with other trades and it shall be their responsibility to inform the Contractor of all openings required in the building structure for installation of work, and to provide sleeves as required. Dimensions of equipment installed and/or provided by others shall be checked so that correct clearances and connections may be made.

B. In general, pipelines requiring gravity drainage shall be installed first, followed by ductwork, large piping mains, and electrical conduit.

C. Leave sufficient space for the installation of insulation on piping and ductwork as specified. It is not acceptable to compress pipe or duct insulation for any reason.

3.04 TEMPORARY FACILITIES

A. Offices:

1. See Section 01 50 00, CONSTRUCTION FACILITIES AND TEMPORARY CONTROLS.

2. The mechanical and plumbing sub-contractor(s) must have the permission of the Owner and the Contractor to install a temporary office/job trailer on the project site.

3. The Contractor and sub-contractors shall completely remove their temporary installations when no longer needed and the premises shall be completely clean, disinfected, patched, and refinished to match adjacent areas.

B. Ladders and Scaffolds:

1. The mechanical and plumbing sub-contractors shall provide their own ladders, scaffolds, and similar items of substantial construction for access to their work in various portions of the building as may be required. When no longer needed, they shall be removed by the sub-contractors.

C. Protection Devices:

1. The mechanical and plumbing sub-contractors shall provide and maintain their own necessary barricades, fences, signal lights, and other similar items required by all governing authorities or shown on the Drawings. When no longer needed, they shall be removed by the sub-contractors.

D. Temporary Fire Protection:

1. The mechanical and plumbing sub-contractors shall provide all necessary first aid hand fire extinguishers for Class A, B, C and special hazards as may exist in their own work area only in accordance with good and safe practices, and as required by jurisdictional safety authorities.

3.05 CLEANING

A. Keep the job site clean. The mechanical and plumbing sub-contractors shall remove all waste and rubbish associated with their work.

B. Upon completion of work, remove materials, scraps, and debris related to plumbing and mechanical work and leave all spaces including tunnels, crawlspaces, pipe or duct chases, and ceiling plenums clean and orderly.

C. The mechanical and plumbing sub-contractors shall be responsible for cleaning the exterior and interior of all their installed equipment prior to start-up. Once all equipment has been cleaned, it will be inspected by the Engineer prior to start-up.

D. The mechanical and plumbing sub-contractors shall provide dust protection for existing materials and equipment, as well as for new materials and equipment, for the duration of the project. Protect existing materials and

equipment from damage for the duration of the project. Clean the exterior and interior of all existing and new equipment at the completion of the project.

3.06 PLACING SYSTEMS INTO OPERATION

A. Prior to the starting of equipment, the mechanical and/or plumbing sub-contractors shall thoroughly inspect the installation and any work completed by other trades and the Contractor or other sub-contractors to verify compliance with the Contract Documents.

B. Start-up of all major plumbing and HVAC equipment shall be completed by factory trained representatives. At the completion of start-up, the factory representative shall submit to the Engineer a start-up report that indicates any problems encountered, potential problems including installation issues, and adjustments made or required to be made to ensure proper operation of the equipment. Any installation deficiencies identified shall be corrected at no additional cost to the Owner.

3.07 OWNER TRAINING

A. Training of the Owner's personnel shall be as specified in Section 01 66 40, MANUFACTURERS' SERVICES and Section 01 77 00, CONTRACT CLOSEOUT.

END OF SECTION 22 01 00

(This page intentionally left blank)

PART 1 GENERAL

1.01 WORK INCLUDED

A. This section covers the testing, adjusting, and balancing requirements necessary for HVAC work on this project. This includes the following major areas of work:

1. Balancing Air Systems:

a. Constant volume air systems.

1.02 GENERAL

A. Also see the GENERAL CONDITIONS, Division 01 00 00, GENERAL REQUIREMENTS, and Section 22 01 00, GENERAL REQUIREMENTS OF PLUMBING AND HVAC which contain information and requirements that apply to the work specified herein and are mandatory for this project.

B. It shall be the responsibility of the mechanical sub-contractor to examine and refer to all architectural, structural, and/or electrical Drawings and specifications for construction conditions which may affect the scope of HVAC work. Inspect the building site and existing facilities for verification of present conditions. Make proper provisions for these conditions in performance of the work and cost thereof.

C. Mechanical work for this project shall include all items, articles, materials and the associated labor mentioned, scheduled or shown in these specifications and in the accompanying Drawings. Furnish and install all equipment, materials and any required incidental items required by good practice to complete the systems described on the Drawings or in the project specifications.

1.03 DEFINITIONS

A. The following definitions apply to the HVAC testing, adjusting, and balancing work on this project. Also see the Drawings and other specifications sections.

1. AABC: Associated Air Balance Council.

2. NEBB: National Environmental Balancing Bureau.

3. TAB: Testing, adjusting, and balancing.

4. TABB: Testing, Adjusting, and Balancing Bureau.

5. TAB Specialist: An independent entity meeting the qualifications to perform TAB work.

6. TDH: Total dynamic head.

1.04 SUBMITTALS

A. Submittals shall be provided as specified in Section 01 33 00, SUBMITTALS and Section 22 01 00, GENERAL REQUIREMENTS OF PLUMBING AND HVAC.

B. Provide plan and procedures to be used for testing, adjusting, and balancing work. Include a complete set of report forms intended for use on this project.

C. Certified TAB Reports: Submit two copies of reports prepared, as specified in this Section, on approved forms certified by TAB firm.

1.05 QUALITY ASSURANCE

A. TAB Specialists Qualifications: Certified by AABC, NEBB, TABB, or as approved by the Engineer prior to bidding.

B. Certify TAB field data reports and perform the following:

1. Review field data reports to validate accuracy of data and to prepare certified TAB reports.

2. Certify that the TAB team complied with the approved TAB plan and the procedures specified and referenced in this Specification.

C. TAB Report Forms: Use standard TAB contractor's forms.

D. Instrumentation Type, Quantity, Accuracy, and Calibration: Comply with requirements in ASHRAE 111, Section 4, "Instrumentation."

E. ASHRAE/IES 90.1 Compliance: Applicable requirements in ASHRAE/IES 90.1, Section 6.7.2.3 - "System Balancing."

1.06 COORDINATION

A. Coordinate the efforts of factory authorized service representatives for systems and equipment, HVAC controls installers, and other mechanics to operate HVAC systems and equipment to support and assist TAB activities.

B. Perform TAB after leakage and pressure tests on air distribution systems have been satisfactorily completed.

PART 2 PRODUCTS

PART 3 EXECUTION

3.01 EXAMINATION

A. Examine the Contract Documents to become familiar with the project requirements and to discover conditions in systems' designs that may preclude proper TAB of systems and equipment.

B. Examine installed systems for balancing devices, such as and fittings, and manual volume dampers. Verify that locations of these balancing devices are applicable for intended purpose and are accessible.

C. Examine the approved submittals for HVAC systems and equipment.

D. Examine HVAC equipment and verify that bearings are greased, belts are aligned and tight, filters are clean, and equipment with functioning controls is ready for operation in a safe and normal condition.

E. Examine heat transfer coils for correct piping connections and for clean and straight fins.

F. Report deficiencies discovered before and during performance of TAB procedures. Observe and record system reactions to changes in conditions. Record default set points if different from indicated values.

3.02 PREPARATION

A. Perform system readiness checks of HVAC systems and equipment to verify system readiness for TAB work. Include, at a minimum, the following:

1. Airside:

   a. Duct systems are clean and complete with terminals installed and connected.
   b. Volume dampers are open and functional.
   c. Clean filters are installed.
   d. Fans are operating, free of vibration, and rotating in correct direction.
   e. Automatic temperature control systems are operational.

f. Windows and doors are installed.
g. Suitable access to balancing devices and equipment is provided.

3.03 GENERAL PROCEDURES FOR TESTING AND BALANCING

A. After testing and balancing, patch probe holes in ducts with plastic plugs.

B. Mark equipment and balancing devices, including damper control positions, valve position indicators, fan speed control levers, and similar controls and devices, with paint or other suitable, permanent identification material to show final settings.

3.04 GENERAL PROCEDURES FOR BALANCING AIR SYSTEMS

A. Prepare test reports for both fans and outlets. Obtain manufacturer's outlet factors and recommended testing procedures. Cross check the summation of required outlet volumes with required fan volumes.

B. Prepare schematic diagrams of systems' "as-built" duct layouts.

C. Determine the best locations in main and branch ducts for accurate duct airflow measurements.

D. Check airflow patterns from the outdoor air louvers and dampers and the return and exhaust air dampers through the supply fan discharge and mixing dampers.

E. Locate start-stop and disconnect switches, electrical interlocks, and motor starters.

F. Verify that motor starters are equipped with properly sized thermal protection.

G. Check dampers for proper position to achieve desired airflow path.

H. Check for airflow blockages.

I. Check condensate drains for proper connections and functioning.

J. Check for proper sealing of air handling unit components.

K. Verify that air duct system is sealed as specified in Section 23 31 13, METAL DUCTS.

3.05 PROCEDURES FOR CONSTANT VOLUME AIR SYSTEMS

A. Adjust fans to deliver total indicated airflows within the maximum allowable fan speed listed by fan manufacturer.

1. Measure total airflow:

a. Set outside air, return air, and relief air dampers for proper position that simulates minimum outdoor air conditions.
b. Where duct conditions allow, measure airflow by Pitot-tube traverse. If necessary, perform multiple Pitot-tube traverses to obtain total airflow.
c. Where duct conditions are not suitable for Pitot-tube traverse measurements, a coil traverse may be acceptable.
d. If a reliable Pitot-tube traverse or coil traverse is not possible, measure airflow at terminals and calculate the total airflow.

2. Measure fan static pressures as follows:

a. Measure static pressure directly at the fan outlet or through the flexible connection.
b. Measure static pressure directly at the fan inlet or through the flexible connection.
c. Measure static pressure across each component that makes up the air handling system.
d. Report artificial loading of filters at the time static pressures are measured.

3. Do not make fan speed adjustments that result in a motor overload condition. Consult equipment manufacturers about fan speed safety factors. Modulate dampers and measure fan motor amperage to ensure that no overload occurs. Measure amperage in full-cooling, full-heating, economizer, and any other operating mode to determine the maximum required brake horsepower.

B. Adjust volume dampers for main duct, submain ducts, and major branch ducts to indicated airflows.

1. Measure airflow of submain and branch ducts.

2. Adjust submain and branch duct volume dampers for specified airflow.

3. Re-measure each submain and branch duct after all have been adjusted.

C. Adjust air inlets and outlets for each space to indicated airflows.

1. Set airflow patterns of adjustable outlets for proper distribution without drafts.

2. Measure inlets and outlets airflow.

3. Adjust each inlet and outlet for specified airflow.

4. Re-measure each inlet and outlet after they have been adjusted.

3.06 PROCEDURES FOR CONDENSING UNITS

A. Verify proper rotation of fans.

B. Record compressor data.

1. not required.

2. Balance each air outlet.

3.07 TOLERANCES

A. Set HVAC system's airflow rates within the following tolerances:

1. Supply, Return, and Exhaust Fans and Equipment with Fans: Plus or minus 10 percent.

2. Air Outlets and Inlets: Plus or minus 10 percent.

B. Maintaining pressure relationships as designed shall have priority over the tolerances specified above.

3.08 FINAL REPORT

A. General: Prepare a certified written report; tabulate and divide the report into separate sections for tested systems and balanced systems.

1. Include a certification sheet at the front of the report's binder, signed and sealed by the certified testing and balancing engineer.

2. Include a list of instruments used for procedures, along with proof of calibration.

3. Certify validity and accuracy of field data.

B. Final Report Contents: In addition to certified field report data, include the following:

1. Fan curves.

2. Manufacturers' test data.

3. Field test reports prepared by system and equipment installers.

4. Other information relative to equipment performance; do not include shop drawings and product data already submitted.

C. General Report Data: In addition to form titles and entries, include the following data:

1. Title page.

2. Name and address of the TAB specialist.

3. Project name.

4. Project location.

5. Engineer's name and address.

6. Contractor's name and address.

7. Report date.

8. Signature of TAB supervisor who certifies the report.

9. Table of Contents with the total number of pages defined for each section of the report. Number each page in the report.

10. Summary of contents including the following:

    a. Indicated versus final performance.
    b. Notable characteristics of systems.
    c. Description of system operation sequence if it varies from the Contract Documents.

11. Nomenclature sheets for each item of equipment.

12. Data for terminal units, including manufacturer's name, type, size, and fittings.

13. Notes to explain why certain final data in the body of reports vary from indicated values.

14. Test conditions for fan performance forms including the following:

    a. Settings for outdoor, return, and exhaust air dampers.
    b. Conditions of filters.
    c. Face and bypass damper settings at coils.
    d. Settings for supply air, static pressure controller.
    e. Other system operating conditions that affect performance.

D. Air Handling Unit Test Reports: For air handling units with coils, include the following:

1. Unit Data:

    a. Unit identification.
    b. Location.
    c. Make and type.
    d. Model number and unit size.
    e. Manufacturer's serial number.
    f. Unit arrangement and class.
    g. Discharge arrangement.
    h. Sheave make, size in inches, and bore.
    i. Center-to-center dimensions of sheave and amount of adjustments in inches.
    j. Number, make, and size of belts.
    k. Number, type, and size of filters.

2. Motor Data:

    a. Motor make, and frame type and size.
    b. Horsepower and rpm.
    c. Volts, phase, and hertz.
    d. Full load amperage and service factor.
    e. Sheave make, size in inches, and bore.
    f. Center-to-center dimensions of sheave and amount of adjustments in inches.

3. Test Data (Indicated and Actual Values):

    a. Total airflow rate in cfm.
    b. Total system static pressure in inches wg.
    c. Fan rpm.

d. Discharge static pressure in inches wg.
e. Filter static pressure differential in inches wg.
f. Preheat coil static pressure differential in inches wg.
g. Cooling coil static pressure differential in inches wg.
h. Heating coil static pressure differential in inches wg.
i. Outdoor airflow in cfm.
j. Return airflow in cfm.
k. Outdoor air damper position.
l. Return air damper position.

E. Fan Test Reports: For supply, return, and exhaust fans, include the following:

1. Fan Data:

a. System identification.
b. Location.
c. Make and type.
d. Model number and size.
e. Manufacturer's serial number.
f. Arrangement and class.
g. Sheave make, size in inches, and bore.

2. Motor Data:

a. Motor make, and frame type and size.
b. Horsepower and rpm.
c. Volts, phase, and hertz.
d. Full load amperage and service factor.
e. Sheave make, size in inches, and bore.
f. Number, make, and size of belts.

3. Test Data (Indicated and Actual Values):

a. Total airflow rate in cfm.
b. Total system static pressure in inches wg.
c. Fan rpm.
d. Discharge static pressure in inches wg.
e. Suction static pressure in inches wg.

F. Air Terminal Device Reports:

1. Unit Data:

a. System and air handling unit identification.

b. Location and zone.
c. Apparatus used for test.
d. Area served.
e. Make.
f. Number from system diagram.
g. Type and model number.
h. Size.

2. Test Data (Indicated and Actual Values):

a. Airflow rate in cfm.
b. Air velocity in fpm.
c. Preliminary airflow rate as needed in cfm.
d. Preliminary velocity as needed in fpm.
e. Final airflow rate in cfm.
f. Final velocity in fpm.

G. Instrument Calibration Reports:

1. Report Data:

a. Instrument type and make.
b. Serial number.
c. Application.
d. Dates of use.
e. Dates of calibration.

3.09 DUCT TESTING

A. Duct testing is required for supply, return or exhaust ductwork that will operate at 3 inches WC static pressure or greater.

B. Leakage test procedures shall follow the outlines and classifications in the SMANCA HVAC Air Duct Leakage Test Manual.

C. The Owner and/or Engineer shall select sections of ductwork from each air handling system for duct leakage testing. The sample shall include at least five transverse joints, typical seams, and access door connections. The sample will include all medium pressure supply ductwork between the air handling unit to within 2-feet of the connection to variable air volume terminal units.

D. The air handling systems shall be tested at 3 inches w.g. and shall meet leakage Class 3.

E. If a section fails to meet allotted leakage level, the mechanical subcontractor shall modify the ductwork to bring it into compliance and shall retest the section until acceptable leakage is demonstrated. One retest shall will be provided by the TAB contractor. The mechanical subcontractor shall pay the TAB contractor for any additional retesting required.

F. All testing and necessary repairs shall be completed prior to concealment of the ductwork

END OF SECTION 23 05 93

(This page intentionally left blank)

PART 1 GENERAL

1.01 WORK INCLUDED

A. This section covers work for furnishing and installing insulation for HVAC ducts on this project, complete. This includes insulation for the following duct services:

1. Indoor duct insulation.

B. Duct liners are specified in Section 23 31 13, METAL DUCTS.

1.02 GENERAL REQUIREMENTS

A. Also see the GENERAL CONDITIONS, Division 01 00 00, GENERAL REQUIREMENTS, and Section 22 01 00, GENERAL REQUIREMENTS OF PLUMBING AND HVAC which contain information and requirements that apply to the work specified herein and are mandatory for this project.

B. Like items of equipment or materials provided hereunder shall be the end products of one manufacturer to achieve standardization for appearance, maintenance, and replacement, and shall include all necessary appurtenances for a complete and working system. The equipment or materials shall be the product of a manufacturer regularly engaged in the production of equipment or materials for the specified use. The manufacturer shall have the sole responsibility for the proper functioning and coordination of the equipment or materials as furnished.

C. The Contractor or their sub-contractors shall provide all required miscellaneous equipment and materials, as shown on the Drawings and in accordance with these Specifications. The Contractor or their sub-contractors shall furnish all equipment and material items, whether specified or not, as necessary to provide a complete, operable HVAC system.

1.03 SUBMITTALS

A. Submittals shall be provided as specified in Section 01 33 00, SUBMITTALS and Section 22 01 00, GENERAL REQUIREMENTS OF PLUMBING AND HVAC.

B. Provide product data for each type of duct insulation used.

1.04 QUALITY ASSURANCE

A. Installer Qualifications: Skilled mechanics who have successfully completed an apprenticeship program or another craft training program certified by the Department of Labor, Bureau of Apprenticeship and Training.

B. Surface Burning Characteristics: For insulation and related materials, as determined by testing identical products according to ASTM E84 by a testing agency acceptable to authorities having jurisdiction. Factory label insulation and jacket materials and adhesive, mastic, tapes, and cement material containers, with appropriate markings of applicable testing agency.

1. Insulation Installed Indoors: Flame spread index of 25 or less, and smoke developed index of 50 or less.

PART 2 PRODUCTS

2.01 INSULATION MATERIALS

A. Products shall not contain asbestos, lead, mercury, or mercury compounds.

B. Products that contact stainless steel shall have a leachable chloride content of less than 50 ppm when tested according to ASTM C871.

C. Insulation materials for use on austenitic stainless steel shall be qualified as acceptable according to ASTM C795.

D. Foam insulation materials shall not use CFC or HCFC blowing agents in the manufacturing process.

E. Mineral Fiber Blanket Insulation: Mineral or glass fibers bonded with a thermosetting resin. Comply with ASTM C553, Type II and ASTM C1290, Type III with factory applied FSK jacket. Factory applied jacket requirements are specified in the "Factory Applied Jackets" article hereinafter.

1. Manufacturers: Subject to compliance with requirements, provide products by one of the following:

a. CertainTeed Corporation.
b. Johns Manville; a Berkshire Hathaway company.
c. Knauf Insulation.
d. Owens Corning.
e. Or equal.

2. Maximum Thermal Conductivity at 75 Degrees F: 0.27.

3. Maximum Operating Temperature: 250 degrees F.

4. Minimum Density: 1.0 pounds per cubic foot.

2.02 ADHESIVES

A. Materials shall be compatible with insulation materials, jackets, and substrates and for bonding insulation to itself and to surfaces to be insulated unless otherwise indicated.

B. Mineral Fiber Adhesive: Comply with MIL-A-3316C, Class 2, Grade A.

C. ASJ Adhesive, and FSK Jacket Adhesive: Comply with MIL-A-3316C, Class 2, Grade A for bonding insulation jacket lap seams and joints.

2.03 MASTICS

A. Materials shall be compatible with insulation materials, jackets, and substrates; comply with MIL-PRF-19565C, Type II.

B. Vapor Barrier Mastic: Water based; suitable for indoor use on below ambient services.

1. Water Vapor Permeance: ASTM E96, Procedure B, 0.013 perm at 43 mil dry film thickness.

2. Service Temperature Range: Minus 20 to plus 180 degrees F.

3. Solids Content: ASTM D1644, 58 percent by volume and 70 percent by weight.

4. Color: White.

2.04 SEALANTS

A. FSK and Metal Jacket Flashing Sealants:

1. Materials shall be compatible with insulation materials, jackets, and substrates.

2. Fire and water resistant, flexible, elastomeric sealant.

3. Service Temperature Range: Minus 40 to plus 250 degrees F.

4. Color: Aluminum.

B. ASJ Flashing Sealants, and Vinyl and PVC Jacket Flashing Sealants:

1. Materials shall be compatible with insulation materials, jackets, and substrates.

2. Fire and water resistant, flexible, elastomeric sealant.

3. Service Temperature Range: Minus 40 to plus 250 degrees F.

4. Color: White.

2.05 FACTORY APPLIED JACKETS

A. Insulation system schedules in Part 3, EXECUTION indicate factory applied jackets on various applications. When factory applied jackets are indicated, comply with the following:

1. FSK Jacket: Aluminum foil, fiberglass reinforced scrim with kraft paper backing, complying with ASTM C1136, Type II.

2.06 FIELD APPLIED JACKETS

A. Field applied jackets shall comply with ASTM C921, Type I, unless otherwise indicated.

B. Aluminum Jacket: Comply with ASTM B209, Alloy 3003, 3005, 3105, or 5005, Temper H-14.

1. Manufacturers: Subject to compliance with requirements, provide products by one of the following:

a. Johns Manville; a Berkshire Hathaway Company.
b. RPR Products, Inc.
c. GLT Products.
d. Or equal.

2. Sheet and roll stock ready for shop or field sizing or factory cut and rolled to size.

3. Finish and thickness are indicated in field applied jacket schedules. If not shown, provide smooth surface jacket finish, minimum 27 gauge thickness.

4. Moisture Barrier for Outdoor Applications: 3 mil thick, heat bonded polyethylene and kraft paper or 2.5 mil thick polysurlyn.

5. Factory Fabricated Fitting Covers:

a. Same material, finish, and thickness as jacket.
b. Preformed 2-piece or gore, 45 and 90 degree, short and long radius elbows.
c. Tee covers.
d. Flange and union covers.
e. End caps.
f. Beveled collars.
g. Valve covers.
h. Field fabricate fitting covers only if factory fabricated fitting covers are not available.

2.07 TAPES

A. FSK Tape: Foil face, vapor retarder tape matching factory applied jacket with acrylic adhesive; complying with ASTM C1136.

1. Width: 3 inches.

2. Thickness: 6.5 mils.

3. Adhesion: 90 ounces force/inch in width.

4. Elongation: 2 percent.

5. Tensile Strength: 40 pounds force/inch in width.

6. FSK Tape Disks and Squares: Precut disks or squares of FSK tape.

B. Aluminum Foil Tape: Vapor retarder tape with acrylic adhesive.

1. Width: 2 inches.

2. Thickness: 3.7 mils.

3. Adhesion: 100 ounces force/inch in width.

4. Elongation: 5 percent.

5. Tensile Strength: 34 pounds force/inch in width.

2.08 SECUREMENTS

A. Cupped Head Weld Pins:

1. Material: Low carbon steel.

2. Finish: Copper coated pins with galvanized steel washer.

3. Pin Gauge: 12 gauge.

B. Staples: Outward clinching insulation staples, nominal 3/4-inch wide, stainless steel or Monel.

C. Wire: 0.062-inch soft annealed, stainless steel.

PART 3 EXECUTION

3.01 PREPARATION

A. Surface Preparation: Clean and dry surfaces to receive insulation. Remove materials that will adversely affect insulation application.

3.02 GENERAL INSTALLATION REQUIREMENTS

A. Install insulation materials, accessories, and finishes with smooth, straight, and even surfaces; free of voids throughout the length of ducts and fittings.

B. Install insulation materials, forms, vapor barriers or retarders, jackets, and thicknesses required for each item as specified in insulation schedules hereinafter.

C. Install accessories compatible with insulation materials and suitable for the service. Install accessories that do not corrode, soften, or otherwise attack insulation or jacket in either wet or dry state.

D. Install insulation with longitudinal seams at top and bottom of horizontal runs.

E. Install multiple layers of insulation with longitudinal and end seams staggered.

F. Keep insulation materials dry during application and finishing.

G. Install insulation with tight longitudinal seams and end joints. Bond seams and joints with adhesive recommended by insulation material manufacturer.

H. Install insulation with least number of joints practical.

I. Where vapor barrier is indicated, seal joints, seams, and penetrations in insulation at hangers, supports, anchors, and other projections with vapor-barrier mastic.

1. Install insulation continuously through hangers and around anchor attachments.

2. For insulation application where vapor barriers are indicated, extend insulation on anchor legs from point of attachment to supported item to point of attachment to structure. Taper and seal ends at attachment to structure with vapor barrier mastic.

3. Install insert materials and install insulation to tightly join the insert. Seal insulation to insulation inserts with adhesive or sealing compound recommended by insulation material manufacturer.

J. Apply adhesives, mastics, and sealants at manufacturer's recommended coverage rate and wet and dry film thicknesses.

K. Install insulation with factory applied jackets as follows:

1. Draw jacket tight and smooth.

2. Cover circumferential joints with 3-inch wide strips, of same material as insulation jacket. Secure strips with adhesive and outward clinching staples along both edges of strip, spaced 4 inches on center.

3. Overlap jacket longitudinal seams at least 1-1/2 inches. Clean and dry surface to receive self-sealing lap. Staple laps with outward clinching staples along edge at 4 inches on center.

a. For below ambient services, apply vapor barrier mastic over staples.

4. Cover joints and seams with tape, according to insulation material manufacturer's written instructions, to maintain vapor seal.

5. Where vapor barriers are indicated, apply vapor barrier mastic on seams and joints and at ends adjacent to duct flanges and fittings.

L. Cut insulation in a manner to avoid compressing insulation more than 75 percent of its nominal thickness.

M. Finish installation with systems at operating conditions. Repair joint separations and cracking due to thermal movement.

N. Repair damaged insulation facings by applying same facing material over damaged areas. Extend patches at least 4 inches beyond damaged areas. Adhere, staple, and seal patches similar to butt joints.

3.03 PENETRATIONS

A. Insulation Installation at Roof Penetrations: Install insulation continuously through roof penetrations.

1. Seal penetrations with flashing sealant.

2. For applications requiring only indoor insulation, terminate insulation above roof surface and seal with joint sealant. For applications requiring indoor and outdoor insulation, install insulation for outdoor applications tightly joined to indoor insulation ends. Seal joint with joint sealant.

3. Extend jacket of outdoor insulation outside roof flashing at least 2 inches below top of roof flashing.

4. Seal jacket to roof flashing with flashing sealant.

B. Insulation Installation at Aboveground Exterior Wall Penetrations: Install insulation continuously through wall penetrations.

1. Seal penetrations with flashing sealant.

2. For applications requiring only indoor insulation, terminate insulation inside wall surface and seal with joint sealant. For applications requiring indoor and outdoor insulation, install insulation for outdoor applications tightly joined to indoor insulation ends. Seal joint with joint sealant.

3. Extend jacket of outdoor insulation outside wall flashing and overlap wall flashing at least 2 inches.

4. Seal jacket to wall flashing with flashing sealant.

C. Insulation Installation at Interior Wall and Partition Penetrations (That Are Not Fire Rated): Install insulation continuously through walls and partitions.

D. Insulation Installation at Fire Rated Wall and Partition Penetrations: Install insulation continuously through penetrations of fire rated walls and partitions. Externally insulate damper sleeves to match adjacent insulation and overlap duct insulation at least 2 inches.

E. Insulation Installation at Floor Penetrations:

1. Duct: For penetrations through fire rated assemblies, terminate insulation at fire damper sleeves and externally insulate damper sleeve beyond floor to match adjacent duct insulation. Overlap damper sleeve and duct insulation at least 2 inches.

2. Seal penetrations through fire rated assemblies.

3.04 INSTALLATION OF MINERAL FIBER INSULATION

A. Blanket Insulation Installation on Ducts and Plenums: Secure with adhesive and insulation pins.

1. Apply adhesives according to manufacturer's recommended coverage rates per unit area, for 100 percent coverage of duct and plenum surfaces.

2. Apply adhesive to the entire circumference of ducts and to all surfaces of fittings and transitions.

3. Install cupped-head, capacitor discharge weld pins on sides and bottom of horizontal ducts and sides of vertical ducts as follows:

   a. On duct sides with dimensions 18 inches and smaller, place pins along longitudinal centerline of duct. Space 3 inches maximum from insulation end joints, and 16 inches on center.
   b. On duct sides with dimensions larger than 18 inches, place pins 16 inches on center each way, and 3 inches maximum from insulation joints. Install additional pins to hold insulation tightly against surface at cross bracing.
   c. Pins may be omitted from top surface of horizontal, rectangular ducts and plenums.
   d. Do not over compress insulation during installation.
   e. Impale insulation over pins and attach speed washers.
   f. Cut excess portion of pins extending beyond speed washers or bend parallel with insulation surface. Cover exposed pins and washers with tape matching insulation facing.

4. For ducts and plenums with surface temperatures below ambient, install a continuous unbroken vapor barrier. Create a facing lap for longitudinal seams and end joints with insulation by removing 2 inches from one edge and one end of insulation segment. Secure laps to adjacent insulation section with 1/2-inch outward clinching staples, 1-inch on center. Install vapor barrier consisting of factory or field applied jacket, adhesive, vapor barrier mastic, and sealant at joints, seams, and protrusions.

   a. Repair punctures, tears, and penetrations with tape or mastic to maintain vapor barrier seal.

b. Install vapor stops for ductwork and plenums operating below 50 degrees F at 18-foot intervals. Vapor stops shall consist of vapor barrier mastic applied in a Z-shaped pattern over insulation face, along butt end of insulation, and over the surface. Cover insulation face and surface to be insulated a width equal to two times the insulation thickness, but not less than 3 inches.

5. Overlap unfaced blankets a minimum of 2 inches on longitudinal seams and end joints. At end joints, secure with steel bands spaced a maximum of 18 inches on center.

6. Install insulation on rectangular duct elbows and transitions with a full insulation section for each surface. Install insulation on round and flat oval duct elbows with individually mitered gores cut to fit the elbow.

7. Insulate duct stiffeners, hangers, and flanges that protrude beyond insulation surface with 6-inch wide strips of same material used to insulate duct. Secure on alternating sides of stiffener, hanger, and flange with pins spaced 6 inches on center.

B. Board Insulation Installation on Ducts and Plenums: Secure with adhesive and insulation pins.

1. Apply adhesives according to manufacturer's recommended coverage rates per unit area, for 100 percent coverage of duct and plenum surfaces.

2. Apply adhesive to entire circumference of ducts and to all surfaces of fittings and transitions.

3. Install either capacitor discharge weld pins and speed washers or cupped-head, capacitor discharge weld pins on sides and bottom of horizontal ducts and sides of vertical ducts as follows:

a. On duct sides with dimensions 18 inches and smaller, place pins along longitudinal centerline of duct. Space 3 inches maximum from insulation end joints, and 16 inches on center.
b. On duct sides with dimensions larger than 18 inches, space pins 16 inches on center each way, and 3 inches maximum from insulation joints. Install additional pins to hold insulation tightly against surface at cross bracing.
c. Pins may be omitted from top surface of horizontal, rectangular ducts and plenums.

d. Do not over compress insulation during installation.
e. Cut excess portion of pins extending beyond speed washers or bend parallel with insulation surface. Cover exposed pins and washers with tape matching insulation facing.

4. For ducts and plenums with surface temperatures below ambient, install a continuous unbroken vapor barrier. Create a facing lap for longitudinal seams and end joints with insulation by removing 2 inches from one edge and one end of insulation segment. Secure laps to adjacent insulation section with 1/2-inch outward clinching staples, 1-inch on center. Install vapor barrier consisting of factory or field applied jacket, adhesive, vapor barrier mastic, and sealant at joints, seams, and protrusions.

   a. Repair punctures, tears, and penetrations with tape or mastic to maintain vapor barrier seal.
   b. Install vapor stops for ductwork and plenums operating below 50 degrees F at 18-foot intervals. Vapor stops shall consist of vapor barrier mastic applied in a Z-shaped pattern over insulation face, along butt end of insulation, and over the surface. Cover insulation face and surface to be insulated a width equal to two times the insulation thickness, but not less than 3 inches.

5. Install insulation on rectangular duct elbows and transitions with a full insulation section for each surface. Groove and score insulation to fit as closely as possible to outside and inside radius of elbows. Install insulation on round and flat oval duct elbows with individually mitered gores cut to fit the elbow.

6. Insulate duct stiffeners, hangers, and flanges that protrude beyond insulation surface with 6-inch wide strips of same material used to insulate duct. Secure on alternating sides of stiffener, hanger, and flange with pins spaced 6 inches on center.

3.05 OUTDOOR DUCT INSULATION INSTALLATION

A. Cover all sides of ductwork with jacketed mineral fiber board insulation. Insulation on the top of the ductwork must be installed in such a manner as to allow water to shed from the top of the duct to prevent water from ponding on top of the ductwork.

B. Install self-adhesive outdoor jacket over board insulation according to the jacket manufacturer's written instructions. All joints in jacketing must overlap by 6 inches minimum.

C. Insulation and jacketing must be continuous and may not be interrupted by duct supports or hangers.

3.06 DUCT INSULATION SCHEDULE

A. Duct insulation shall not be installed on any indoor, supply, or return ductwork that is exposed to view unless otherwise indicated on the Drawings.

B. Insulation materials and thicknesses for ductwork are identified in the table below. If more than one material is listed for an application, selection from materials listed is at the Contractor's option. Ductwork that is not listed below or is exposed to view shall not be insulated.

Application	Insulation Type	Installed R-Value	Vapor Barrier	Factory Installed Jacket Type
Indoor Supply	Mineral Fiber Blanket	6	YES	FSK
Indoor Exhaust *	Mineral Fiber Blanket	8	YES	FSK
Outdoor Supply and Return	Mineral Fiber Board	8	YES	FSK

*Indoor Exhaust Ductwork shall be insulated from the penetration of the building envelope to 10 feet upstream of a backdraft of shutoff damper.

3.07 FIELD APPLIED DUCT JACKETING SCHEDULE

A. Field applied jackets HVAC ducts are identified in the table below. If more than one material is listed for a type of application, selection from materials listed is the Contractor's option.

Application	Installation Location	Field Applied Jacketing
Supply	Outdoors	Self-adhesive Outdoor Jacket
Return	Outdoors	Self-adhesive Outdoor Jacket

END OF SECTION 23 07 13

(This page intentionally left blank)

PART 1 GENERAL

1.01 WORK INCLUDED

A. This section covers work for furnishing and installing metal ducts and appurtenances for HVAC systems on this project, complete. This includes the following items:

1. Rectangular ducts and fittings.
2. Round ducts and fittings.
3. Sheet metal materials.
4. Sealants and gaskets.
5. Hangers and supports.
6. Seismic restraint devices.

1.02 GENERAL REQUIREMENTS

A. Also see the GENERAL CONDITIONS, Division 01 00 00, GENERAL REQUIREMENTS, and Section 22 01 00, GENERAL REQUIREMENTS OF PLUMBING AND HVAC which contain information and requirements that apply to the work specified herein and are mandatory for this project.

B. Like items of equipment or materials provided hereunder shall be the end products of one manufacturer to achieve standardization for appearance, maintenance, and replacement, and shall include all necessary appurtenances for a complete and working system. The equipment or materials shall be the product of a manufacturer regularly engaged in the production of equipment or materials for the specified use. The manufacturer shall have the sole responsibility for the proper functioning and coordination of the equipment or materials as furnished.

C. The Contractor or their sub-contractors shall provide all required miscellaneous equipment and materials, as shown on the Drawings and in accordance with these Specifications. The Contractor or their sub-contractors shall furnish all equipment and material items, whether specified or not, as necessary to provide a complete, operable HVAC system.

1.03 SUBMITTALS

A. Submittals shall be provided as specified in Section 01 33 00, SUBMITTALS and Section 22 01 00, GENERAL REQUIREMENTS OF PLUMBING AND HVAC.

B. Submit product data and shop drawings on all metal duct and accessories used on this project.

1.04 QUALITY ASSURANCE

A. Perform work according to Sheet Metal and Air Conditioning Contractors' National Association (SMACNA) 1966, "HVAC Duct Construction Standards – Metal and Flexible".

B. Construct work according to NFPA 90A, "Standard for the Installation of Air Conditioning and Ventilating Systems"

1.05 PERFORMANCE REQUIREMENTS

A. Structural Performance: Duct hangers and supports shall withstand the effects of gravity and seismic loads and stresses within limits and under conditions described in SMACNA's "HVAC Duct Construction Standards - Metal and Flexible", SMACNA's "Seismic Restraint Manual: Guidelines for Mechanical Systems", and ASCE/SEI 7.

B. Airstream Surfaces: Surfaces in contact with the airstream shall comply with the requirements of ANSI/ASHRAE 62.1.

1.06 PROJECT CONDITIONS

A. Unless stated otherwise, the environment and air streams can include varying concentrations of the following chemical components:

1. Methane.

2. Hydrogen Sulfide.

3. Grease.

4. Condensation.

PART 2 PRODUCTS

2.01 RECTANGULAR DUCT AND FITTINGS

A. General Fabrication Requirements: Comply with SMACNA's "HVAC Duct Construction Standards - Metal and Flexible" based on the indicated static pressure class hereinafter in Part 3, EXECUTION, unless otherwise indicated.

B. Transverse Joints: Select joint types and fabricate according to SMACNA's "HVAC Duct Construction Standards - Metal and Flexible," Figure 2-1, "Rectangular Duct/Transverse Joints," for static pressure class, applicable sealing requirements, materials involved, duct support intervals, and other provisions in SMACNA's "HVAC Duct Construction Standards - Metal and Flexible."

C. Longitudinal Seams: Select seam types and fabricate according to SMACNA's "HVAC Duct Construction Standards - Metal and Flexible," Figure 2-2, "Rectangular Duct/Longitudinal Seams," for static pressure class, applicable sealing requirements, materials involved, duct-support intervals, and other provisions in SMACNA's "HVAC Duct Construction Standards - Metal and Flexible."

D. Elbows, Transitions, Offsets, Branch Connections, and Other Duct Construction: Select types and fabricate according to SMACNA's "HVAC Duct Construction Standards - Metal and Flexible," Chapter 4, "Fittings and Other Construction," for static pressure class, applicable sealing requirements, materials involved, duct support intervals, and other provisions in SMACNA's "HVAC Duct Construction Standards - Metal and Flexible."

2.02 ROUND DUCTS AND FITTINGS

A. General Fabrication Requirements: Comply with SMACNA's "HVAC Duct Construction Standards - Metal and Flexible," Chapter 3, "Round, Oval, and Flexible Duct," based on the indicated static pressure class hereinafter in Part 3, EXECUTION, unless otherwise indicated.

B. Transverse Joints: Select joint types and fabricate according to SMACNA's "HVAC Duct Construction Standards - Metal and Flexible," Figure 3-1, "Round Duct Transverse Joints," for static pressure class, applicable sealing requirements, materials involved, duct support intervals, and other provisions in SMACNA's "HVAC Duct Construction Standards - Metal and Flexible."

1. Transverse Joints in Ducts Larger Than 24-inch Diameter: Flanged.

C. Tees and Laterals: Select types and fabricate according to SMACNA's "HVAC Duct Construction Standards - Metal and Flexible," Figure 3-5, "90 Degree Tees

and Laterals," and Figure 3-6, "Conical Tees," for static pressure class, applicable sealing requirements, materials involved, duct support intervals, and other provisions in SMACNA's "HVAC Duct Construction Standards - Metal and Flexible."SHEET METAL MATERIALS

D. General Material Requirements: Comply with SMACNA's "HVAC Duct Construction Standards - Metal and Flexible" for acceptable materials, material thicknesses, and duct construction methods unless otherwise indicated. Sheet metal materials shall be free of pitting, seam marks, roller marks, stains, discolorations, and other imperfections.

E. Galvanized Sheet Steel: Comply with ASTM A653.

1. Galvanized Coating Designation: G90 zinc coating according to ASTM A90.

2. Quality: Lock forming.

F. Tie Rods: Galvanized steel, 1/4-inch minimum diameter for lengths 36 inches or less; 3/8-inch minimum diameter for lengths longer than 36 inches.

G. Fasteners: Rivets, bolts, or sheet metal screws.

2.03 SEALANTS AND GASKETS

A. General Sealant and Gasket Requirements: Surface burning characteristics for sealants and gaskets shall be a maximum flame spread index of 25 and a maximum smoke developed index of 50 when tested according to UL 723; certified by an NRTL.

B. Water Based Joint and Seam Sealant (to be used for any exposed ducts):

1. Application Method: Brush on.

2. Solids Content: Minimum 65 percent.

3. Shore A Hardness: Minimum 20.

4. Water resistant.

5. Mold and mildew resistant.

6. VOC: Maximum 75 grams/Liter (less water).

7. Maximum Static Pressure Class: 10-inch w.g., positive and negative.

8. Service: Indoor or outdoor.

9. Substrate: Compatible with galvanized sheet steel (both PVC coated and bare), stainless steel, or aluminum sheets.

C. Flanged Joint Sealant: Comply with ASTM C920.

1. General: Single component, acid curing, silicone, elastomeric.

2. Type: S.

3. Grade: NS.

4. Class: 25.

5. Use: O.

D. Round Duct Joint O-Ring Seals:

1. Seal shall provide a maximum leakage class of 3 cfm/100 square feet at 1-inch w.g. and shall be rated for 10-inch w.g. static pressure class, positive or negative.

2. EPDM O-ring to seal in concave bead in coupling or fitting spigot.

3. Double-lipped, EPDM O-ring seal, mechanically fastened to factory fabricated couplings and fitting spigots.

2.04 HANGERS AND SUPPORTS

A. Hanger Rods for Corrosive Environments: Electrogalvanized, all-thread rods or galvanized steel rods with threads painted with zinc chromate primer after installation.

B. Strap and Rod Sizes: Comply with SMACNA's "HVAC Duct Construction Standards - Metal and Flexible," Table 5-1, "Rectangular Duct Hangers Minimum Size," and Table 5-2, "Minimum Hanger Sizes for Round Duct."

C. Steel Cables for Galvanized Steel Ducts: Galvanized steel complying with ASTM A603.

D. Steel Cable End Connections: Cadmium plated steel assemblies with brackets, swivel, and bolts designed for duct hanger service; with an automatic locking and clamping device.

E. Duct Attachments: Sheet metal screws, blind rivets, or self-tapping metal screws; compatible with duct materials.

F. Trapeze and Riser Supports:

1. Supports for Galvanized Steel Ducts: Galvanized steel shapes and plates.

PART 3 EXECUTION

3.01 GENERAL DUCT INSTALLATION

A. The Drawings' plans, schematics, and diagrams indicate the general location and arrangement of the duct system. Indicated duct locations, configurations, and arrangements were used to size ducts and calculate friction loss for air handling equipment sizing and for other design considerations. Install duct systems as indicated unless deviations to layout are approved on shop drawings and coordination drawings.

B. Install and seal ducts according to SMACNA's "HVAC Duct Construction Standards - Metal and Flexible" unless otherwise indicated.

C. Install ducts in maximum practical lengths.

D. Install ducts with fewest possible joints.

E. Install factory fabricated or shop fabricated fittings for changes in direction, size, and shape and for branch connections.

F. Unless otherwise indicated, install ducts vertically and horizontally, and parallel and perpendicular to building lines.

G. Install ducts close to walls, overhead construction, columns, and other structural and permanent enclosure elements of the building.

H. Install ducts with a clearance of 1-inch, plus allowance for insulation thickness where applicable.

I. Route ducts to avoid passing through transformer vaults and electrical equipment rooms and enclosures. Do not route ducts directly over electrical panels or enclosures; observe all clearance requirements of the National Electrical Code, latest edition.

J. Where ducts pass through non-fire rated interior partitions and exterior walls and are exposed to view, cover the opening between the partition and duct or duct insulation with sheet metal flanges of same metal thickness as the

duct. Overlap openings on four sides by at least 1-1/2 inches. Seal around ductwork with a sealant as specified in Section 07 90 00, CAULKING AND SEALANTS.

K. Where ducts pass through fire rated interior partitions and exterior walls, install fire dampers. Comply with requirements in Section 23 33 00, AIR DUCT ACCESSORIES for fire and smoke dampers.

L. Protect duct interiors from moisture, construction debris and dust, and other foreign materials. Comply with SMACNA's "IAQ Guidelines for Occupied Buildings Under Construction," Appendix G, "Duct Cleanliness for New Construction Guidelines."

3.02 INSTALLATION OF EXPOSED DUCTWORK

A. Protect ducts exposed in finished spaces from being dented, scratched, or damaged.

B. Trim duct sealants flush with metal. Create a smooth and uniform exposed bead. Use only a water based sealant system on exposed ducts. Do not use a two part tape sealing system.

C. Grind welds to provide smooth surface free of burrs, sharp edges, and weld splatter. When welding stainless steel with a No. 3 or 4 finish, grind the welds flush, polish the exposed welds, and treat the welds to remove discoloration caused by welding.

D. Maintain consistency, symmetry, and uniformity in the arrangement and fabrication of fittings, hangers and supports, duct accessories, and air outlets.

E. Repair or replace damaged sections and finished work that does not comply with these requirements.

3.03 DUCT SEALING

A. Seal ducts at a minimum to the following seal classes according to SMACNA's "HVAC Duct Construction Standards - Metal and Flexible":

1. Outdoor, Supply Air Ducts: Seal Class A.

2. Outdoor, Exhaust Ducts: Seal Class C.

3. Outdoor, Return Air Ducts: Seal Class C.

4. Unconditioned Space, Supply Air Ducts in Pressure Classes 2-Inch w.g. and Lower: Seal Class B.

5. Unconditioned Space, Supply Air Ducts in Pressure Classes Higher Than 2-Inch w.g.: Seal Class A.

6. Unconditioned Space, Exhaust Ducts: Seal Class C.

7. Unconditioned Space, Return Air Ducts: Seal Class B.

8. Conditioned Space, Supply Air Ducts in Pressure Classes 2-Inch w.g. and Lower: Seal Class C.

9. Conditioned Space, Supply Air Ducts in Pressure Classes Higher Than 2-Inch w.g.: Seal Class B.

10. Conditioned Space, Exhaust Ducts: Seal Class B.

11. Conditioned Space, Return Air Ducts: Seal Class C.

B. Leakage Tests:

1. Test 100 percent of installed ductwork for leakage in accordance with "System Pressure Testing for Leaks," published by United Sheet Metal Division of United McGill Corporation. Use prescribed test kit containing test blower, two U-tube manometers and calibrated curve attached to the orifice tube assembly.

2. Pressurize installed duct system in 2-inch water gauge over design operating pressure. Total allowable leakage shall not exceed one percent of air handling capacity of system. If system is tested in sections, add leakage rates for individual sections to determine leakage for the whole system.

3. Correct leaks found in excess of allowable limits. Retest.

4. Have test results available for review on a progressive and final basis. Include test results in project closing file.

5. For bidding purposes, assume that all leakage tests will be witnessed by the Engineer. Notify the Engineer of testing schedule a minimum of 7 days in advance.

6. Disassemble, reassemble, and seal segments of systems to accommodate leakage testing and for compliance with test requirements.

7. Test for leaks before applying external insulation.

3.04 HANGER AND SUPPORT INSTALLATION

A. Comply with SMACNA's "HVAC Duct Construction Standards - Metal and Flexible," Chapter 5, "Hangers and Supports."

B. Building Attachments: Concrete inserts, powder actuated fasteners, or structural steel fasteners appropriate for construction materials to which hangers are being attached.

1. Where practical, install concrete inserts before placing concrete.

2. Install powder actuated concrete fasteners after concrete is placed and completely cured.

3. Use powder actuated concrete fasteners for standard weight aggregate concretes or for slabs more than 4 inches thick.

4. Do not use powder actuated concrete fasteners for lightweight aggregate concretes or for slabs less than 4 inches thick.

5. Do not use powder actuated concrete fasteners for seismic restraints.

C. Hanger Spacing: Comply with SMACNA's "HVAC Duct Construction Standards - Metal and Flexible," Table 5-1, "Rectangular Duct Hangers Minimum Size," and Table 5-2, "Minimum Hanger Sizes for Round Duct," for maximum hanger spacing; install hangers and supports within 24 inches of each elbow and within 48 inches of each branch intersection.

D. Hangers Exposed to View: Provide threaded rod and angle or channel supports.

E. Threaded Rods: Provide double nuts and washers.

F. Support vertical ducts with steel angles or channel secured to the sides of the duct with welds, bolts, sheet metal screws, or blind rivets; support at each floor and at a maximum interval of 16 feet.

G. Install upper attachments to structures. Select and size upper attachments with pull-out, tension, and shear capacities appropriate for supported loads and building materials where used.

3.05 SEISMIC RESTRAINT DEVICE INSTALLATION

A. Install ducts with hangers and braces designed to support the duct and to restrain against seismic forces required by applicable building codes. Comply with SMACNA's "Seismic Restraint Manual: Guidelines for Mechanical Systems" and ASCE/SEI 7.

3.06 CONNECTIONS

A. Make connections to equipment with flexible connectors complying with Section 23 33 00, AIR DUCT ACCESSORIES.

B. Comply with SMACNA's "HVAC Duct Construction Standards - Metal and Flexible" for branch, outlet and inlet, and terminal unit connections.

3.07 DUCT CLEANING

A. Clean duct system before testing, adjusting, and balancing.

B. Use service openings for entry and inspection.

1. Create new openings and install access panels appropriate for duct static-pressure class if required for cleaning access. Provide insulated panels for insulated or lined duct. Patch insulation and liner as recommended by duct liner manufacturer. Comply with Section 23 33 00, AIR DUCT ACCESSORIES for access panels and doors.

2. Disconnect and reconnect flexible ducts as needed for cleaning and inspection.

3. Where applicable, remove and reinstall ceiling to gain access during the cleaning process.

C. Particulate Collection and Odor Control:

1. When venting vacuuming system inside the building, use HEPA filtration with 99.97 percent collection efficiency for 0.3-micron-size (or larger) particles.

2. When venting vacuuming system to outdoors, use filter to collect debris removed from HVAC system, and locate exhaust downwind and away from air intakes and other points of entry into building.

D. Clean the following components by removing surface contaminants and deposits:

1. Air outlets and inlets (registers, grilles, and diffusers).

2. Supply, return, and exhaust fans including fan housings, plenums (except ceiling supply and return plenums), scrolls, blades or vanes, shafts, baffles, dampers, and drive assemblies.

3. Air handling unit internal surfaces and components including mixing box, coil section, condensate drain pans, filters and filter sections, and condensate collectors and drains.

4. Coils and related components.

5. Return air ducts, dampers, actuators, and turning vanes except in ceiling plenums and mechanical equipment rooms.

6. Supply air ducts, dampers, actuators, and turning vanes.

7. Dedicated exhaust and ventilation components and makeup air systems.

E. Mechanical Cleaning Methodology:

1. Clean metal duct systems using mechanical cleaning methods that extract contaminants from within duct systems and remove contaminants from building.

2. Use vacuum collection devices that are operated continuously during cleaning. Connect vacuum device to downstream end of duct sections so areas being cleaned are under negative pressure.

3. Use mechanical agitation to dislodge debris adhered to interior duct surfaces without damaging integrity of metal ducts, duct liner, or duct accessories.

4. Antimicrobial Agents and Coatings: Apply EPA registered antimicrobial agents if fungus is present. Apply antimicrobial agents according to manufacturer's written instructions after removal of surface deposits and debris.

3.08 START UP

A. Air Balance: Comply with the requirements of Section 23 05 93, TESTING, ADJUSTING, AND BALANCING FOR HVAC.

3.09 DUCT SCHEDULE

A. Fabricate ducts with **galvanized steel** sheet except as otherwise indicated on the Drawings and as follows hereinafter.

B. Supply Ducts:

1. Ducts Connected to Fan Coil Units, Furnaces, Heat Pumps, and Terminal Units:

   a. Pressure Class: Positive 2-inch w.g.
   b. Minimum SMACNA Seal Class: C.
   c. SMACNA Leakage Class for Rectangular: 16.
   d. SMACNA Leakage Class for Round and Flat Oval: 8.

2. Ducts Connected to Constant Volume Air Handling Units:

   a. Pressure Class: Positive 2-inch w.g.
   b. Minimum SMACNA Seal Class: C.
   c. SMACNA Leakage Class for Rectangular: 16.
   d. SMACNA Leakage Class for Round and Flat Oval: 8.

C. Return Ducts:

1. Ducts Connected to Fan Coil Units, Furnaces, Heat Pumps, and Terminal Units:

   a. Pressure Class: Positive or negative 2-inch w.g.
   b. Minimum SMACNA Seal Class: C.
   c. SMACNA Leakage Class for Rectangular: 16.
   d. SMACNA Leakage Class for Round and Flat Oval: 8.

2. Ducts Connected to Air Handling Units:

   a. Pressure Class: Positive or negative 2-inch w.g.
   b. Minimum SMACNA Seal Class: C.
   c. SMACNA Leakage Class for Rectangular: 16.
   d. SMACNA Leakage Class for Round and Flat Oval: 8.

D. Exhaust Ducts:

1. Ducts Connected to Fans Exhausting (ASHRAE 62.1, Class 1 and 2) Air:

   a. Pressure Class: Negative 2-inch w.g.
   b. Minimum SMACNA Seal Class: C if negative pressure, and A if positive pressure.
   c. SMACNA Leakage Class for Rectangular: 16.
   d. SMACNA Leakage Class for Round and Flat Oval: 8.

2. Ducts Connected to Air Handling Units:

    a. Pressure Class: Positive or negative 3-inch w.g.
    b. Minimum SMACNA Seal Class: B if negative pressure, and A if positive pressure.
    c. SMACNA Leakage Class for Rectangular: 8.
    d. SMACNA Leakage Class for Round and Flat Oval: 4.

E. Intermediate Reinforcement:

1. Galvanized Steel Ducts: Galvanized steel.

F. Elbow Configuration:

1. Rectangular Duct: Comply with SMACNA's "HVAC Duct Construction Standards - Metal and Flexible," Figure 4-2, "Rectangular Elbows."

    a. Velocity 1000 fpm or Lower:

        1) Radius Type RE 1 with minimum 0.5 radius to diameter ratio.
        2) Mitered Type RE 4 without vanes.

    b. Velocity 1000 to 1500 fpm:

        1) Radius Type RE 1 with minimum 1.0 radius to diameter ratio.
        2) Radius Type RE 3 with minimum 0.5 radius to diameter ratio and two vanes.
        3) Mitered Type RE 2 with vanes complying with SMACNA's "HVAC Duct Construction Standards - Metal and Flexible," Figure 4-3, "Vanes and Vane Runners," and Figure 4-4, "Vane Support in Elbows."

    c. Velocity 1500 fpm or Higher:

        1) Radius Type RE 1 with minimum 1.5 radius to diameter ratio.
        2) Radius Type RE 3 with minimum 1.0 radius to diameter ratio and two vanes.
        3) Mitered Type RE 2 with vanes complying with SMACNA's "HVAC Duct Construction Standards - Metal and Flexible," Figure 4-3, "Vanes and Vane Runners," and Figure 4-4, "Vane Support in Elbows."

2. Rectangular Duct: Comply with SMACNA's "HVAC Duct Construction Standards - Metal and Flexible," Figure 4-2, "Rectangular Elbows."

    a. Radius Type RE 1 with minimum 1.5 radius to diameter ratio.
    b. Radius Type RE 3 with minimum 1.0 radius to diameter ratio and two vanes.
    c. Mitered Type RE 2 with vanes complying with SMACNA's "HVAC Duct Construction Standards - Metal and Flexible," Figure 4-3, "Vanes and Vane Runners," and Figure 4-4, "Vane Support in Elbows."

3. Round Duct: Comply with SMACNA's "HVAC Duct Construction Standards - Metal and Flexible," Figure 3-4, "Round Duct Elbows."

    a. Minimum Radius to Diameter Ratio and Elbow Segments: Comply with SMACNA's "HVAC Duct Construction Standards - Metal and Flexible," Table 3-1, "Mitered Elbows." Elbows with less than a 90 degree change of direction have proportionately fewer segments.

        1) Velocity 1000 fpm or Lower: 0.5 radius to diameter ratio and three segments for 90 degree elbow.
        2) Velocity 1000 to 1500 fpm: 1.0 radius to diameter ratio and four segments for 90 degree elbow.
        3) Velocity 1500 fpm or Higher: 1.5 radius to diameter ratio and five segments for 90 degree elbow.

    b. Round Elbows, 12 Inches and Smaller in Diameter: Stamped or pleated.
    c. Round Elbows, 14 Inches and Larger in Diameter: Standing seam.

G. Branch Configuration:

1. Rectangular Duct: Comply with SMACNA's "HVAC Duct Construction Standards - Metal and Flexible," Figure 4-6, "Branch Connection."

    a. Rectangular Main to Rectangular Branch: 45 degree entry.
    b. Rectangular Main to Round Branch: Spin in.

2. Round Duct: Comply with SMACNA's "HVAC Duct Construction Standards - Metal and Flexible," Figure 3-5, "90 Degree Tees and

Laterals," and Figure 3-6, "Conical Tees." Saddle taps are permitted in existing duct.

a. Velocity 1000 fpm or Lower: 90 degree tap.
b. Velocity 1000 to 1500 fpm: Conical tap.
c. Velocity 1500 fpm or Higher: 45 degree lateral.

END OF SECTION 23 31 13

(This page intentionally left blank)

PART 1 GENERAL

1.01 SUMMARY

A. This Section includes the following:

1. Volume dampers.

2. Turning vanes.

3. Flexible connectors.

1.02 SUBMITTALS

A. Product Data: For the following:

1. Grease filter assembly.

1.03 QUALITY ASSURANCE

A. Comply with NFPA 90A, "Installation of Air Conditioning and Ventilating Systems," and NFPA 90B, "Installation of Warm Air Heating and Air Conditioning Systems."

PART 2 PRODUCTS

2.01 SHEET METAL MATERIALS

A. Comply with SMACNA's "HVAC Duct Construction Standards--Metal and Flexible" for acceptable materials, material thicknesses, and duct construction methods, unless otherwise indicated.

B. Galvanized Sheet Steel: Lock-forming quality; complying with ASTM A 653/A 653M; ducts shall have mill-phosphatized finish for surfaces exposed to view.

C. Stainless Steel: ASTM A 480/A 480M.

D. Aluminum Sheets: ASTM B 209, alloy 3003, temper H14; with mill finish for concealed ducts and standard, 1-side bright finish for exposed ducts.

E. Extruded Aluminum: ASTM B 221, alloy 6063, temper T6.

F. Reinforcement Shapes and Plates: Galvanized-steel reinforcement where installed on galvanized sheet metal ducts; compatible materials for aluminum and stainless-steel ducts.

G. Tie Rods: Galvanized steel, 1/4-inch minimum diameter for lengths 36 inches or less; 3/8-inch minimum diameter for lengths longer than 36 inches.

2.02 VOLUME DAMPERS

A. Manufacturers:

1. Ruskin Company.
2. Air Balance, Inc.
3. McGill AirFlow Corporation.
4. METALAIRE, Inc.
5. Nailor Industries Inc.
6. Penn Ventilation Company, Inc.
7. Vent Products Company, Inc.

B. General Description: Factory fabricated, with required hardware and accessories. Stiffen damper blades for stability. Include locking device to hold single-blade dampers in a fixed position without vibration. Close duct penetrations for damper components to seal duct consistent with pressure class.

C. Standard Volume Dampers: Multiple- or single-blade, parallel- or opposed-blade design as indicated, standard leakage rating, with linkage outside airstream, and suitable for horizontal or vertical applications.

1. Steel Frames: Hat-shaped, galvanized sheet steel channels, minimum of 0.064 inch thick, with mitered and welded corners; frames with flanges where indicated for attaching to walls and flangeless frames where indicated for installing in ducts.
2. Roll-Formed Steel Blades: 0.064-inch- thick, galvanized sheet steel.
3. Blade Axles: Galvanized steel.
4. Bearings: Molded synthetic.
5. Tie Bars and Brackets: Galvanized steel.

D. Jackshaft: 1-inch- diameter, galvanized-steel pipe rotating within pipe-bearing assembly mounted on supports at each mullion and at each end of multiple-damper assemblies.

1. Length and Number of Mountings: Appropriate to connect linkage of each damper in multiple-damper assembly.

E. Damper Hardware: Zinc-plated, die-cast core with dial and handle made of 3/32-inch- thick zinc-plated steel, and a 3/4-inch hexagon locking nut. Include center hole to suit damper operating-rod size. Include elevated platform for insulated duct mounting.

2.03 TURNING VANES

A. Materials: Same as duct.

B. Fabrication:

1. Fabricated double vane units.

2. Pressure drop through elbows: Maximum 20 percent of velocity pressure.

2.04 FLEXIBLE CONNECTORS

A. Manufacturers:

1. Ductmate Industries, Inc.

2. Duro Dyne Corp.

3. Ventfabrics, Inc.

4. Ward Industries, Inc.

B. General Description: Flame-retardant or noncombustible fabrics, coatings, and adhesives complying with UL 181, Class 1.

C. Flexible Connector Fabric: Glass fabric double coated with neoprene.

1. Minimum Weight: 26 oz./sq. yd..

2. Tensile Strength: 480 lbf/inch in the warp and 360 lbf/inch in the filling.

3. Service Temperature: Minus 40 to plus 200 deg F.

2.05 DUCT ACCESSORY HARDWARE

A. Instrument Test Holes: Cast iron or cast aluminum to suit duct material, including screw cap and gasket. Size to allow insertion of pitot tube and other testing instruments and of length to suit duct insulation thickness.

B. Adhesives: High strength, quick setting, neoprene based, waterproof, and resistant to gasoline and grease.

PART 3 EXECUTION

3.01 APPLICATION AND INSTALLATION

A. Install duct accessories according to applicable details in SMACNA's "HVAC Duct Construction Standards--Metal and Flexible" for metal ducts and in NAIMA AH116, "Fibrous Glass Duct Construction Standards," for fibrous-glass ducts.

B. Provide duct accessories of materials suited to duct materials; use galvanized-steel accessories in galvanized-steel and fibrous-glass ducts, stainless-steel accessories in stainless-steel ducts, and aluminum accessories in aluminum ducts.

C. Install volume dampers in ducts with liner; avoid damage to and erosion of duct liner.

D. Provide balancing dampers at points on supply, return, and exhaust systems where branches lead from larger ducts as required for air balancing. Install at a minimum of two duct widths from branch takeoff.

E. Provide test holes at fan inlets and outlets and elsewhere as indicated.

F. Install flexible connectors immediately adjacent to equipment in ducts associated with fans and motorized equipment supported by vibration isolators.

3.02 ADJUSTING

A. Adjust duct accessories for proper settings.

END OF SECTION 23 33 00

PART 1 GENERAL

1.01 WORK INCLUDED

A. This section includes the work required to furnish and install, complete, intake and exhaust fixed/stationary metal air louvers.

B. The extent of the work for louvers is indicated on the Drawings and in applicable schedules, and by the requirements of this section.

1.02 GENERAL AND PERFORMANCE REQUIREMENTS

A. See the GENERAL CONDITIONS, Division 01 00 00, GENERAL REQUIREMENTS, and Section 22 01 00, GENERAL REQUIREMENTS OF PLUMBING AND HVAC which contain information and requirements that apply to the work specified herein and are mandatory for this project.

B. System Performance Requirements: Provide aluminum louver units that comply with requirements shown on the Drawings and specified, as demonstrated by testing manufacturer's stock systems according to test methods indicated.

C. Design Concept: Drawings indicate size, profiles, dimensional, and performance requirements of louvers required. Louvers by various manufacturers may be considered provided deviations do not change the design concept and these specifications are met.

D. Like items of equipment or materials provided hereunder shall be the end products of one manufacturer to achieve standardization for appearance, maintenance, and replacement, and shall include all necessary appurtenances for a complete and working system. The equipment or materials shall be the product of a manufacturer regularly engaged in the production of equipment or materials for the specified use. The manufacturer shall have the sole responsibility for the proper functioning and coordination of the equipment or materials as furnished.

E. The Contractor or their sub-contractors shall provide all required miscellaneous equipment and materials, as shown on the Drawings and in accordance with these Specifications. The Contractor or their sub-contractors shall furnish all equipment and material items, whether specified or not, as necessary to provide a complete, operable HVAC system.

1.03 SUBMITTALS

A. Submittals shall include the following in accordance with Section 01 33 00, SUBMITTALS:

1. Product data, including construction details and fabrication methods; profiles, gauges, and dimensions of individual components; data on hardware, accessories, and finishes; capacities, ratings, and performance characteristics; and recommendations for maintenance and cleaning of exterior surfaces.

2. Shop drawings including installation details, elevations, anchors, full size details of typical composite members, reinforcement, hardware, and accessories.

3. Sample Wiring Diagrams: Submit manufacturer's electrical requirements for power supply wiring to equipment. Submit manufacturer's ladder type wiring diagrams for interlock and control wiring. Clearly differentiate between portions of wiring that are factory installed and portions to be field installed.

4. Operation and Maintenance Data: Submit operation and maintenance instructions, including lubrication instructions, motor and drive replacement, and spare parts lists. Include this data, product data, shop drawings in maintenance manuals.

5. Certification by an independent testing laboratory showing that louvers comply with performance requirements indicated.

1.04 QUALITY AND REFERENCE STANDARDS

A. Manufacturer’s specifications, recommendations, and installation instructions. All louvers shall be factory engineered to withstand seismic loads specified on the Drawings. Minimum design loads shall be calculated in accordance with ASCE 7.

B. Manufacturer’s Qualifications: Firms regularly engaged in manufacture of air outlets and inlets of types and capacities required, whose products have been in satisfactory use in similar service for not less than 5 years.

C. American Society of Heating, Refrigerating, and Air Conditioning Engineers (ASHRAE) Compliance: Test and rate air outlets and inlets in accordance with ASHRAE 70 "Method of Testing the Performance of Air Outlets and Air Inlets".

D. Air Movement and Control Association International (AMCA) Compliance: Test and rate louvers in accordance with AMCA 500-L "Laboratory Methods of Testing Louvers for Rating". Perform all work according to AMCA Certification for water penetration, air performance, and wind driven rain according to AMCA 500-L.

E. AMCA Seal: Provide louvers bearing AMCA Certified Rating Seal. AMCA certified ratings seal applies to air performance and water penetration ratings.

F. National Fire Protection Association (NFPA) Compliance: Install air outlets and inlets in accordance with NFPA 90A "Standard for the Installation of Air Conditioning and Ventilating Systems".

G. The Aluminum Association (AA): AA DAF-45 "Designation System for Aluminum Finishes".

H. Louvers Requiring Electrical Connection: Listed and classified by UL or another testing firm acceptable to authority having jurisdiction as suitable for intended purpose.

I. Other reference standards noted in this specification section.

PART 2 PRODUCTS

2.01 GENERAL

A. The use of a manufacturer's name and model or catalog number is for establishing the standard of quality and general configuration desired only. Products of other manufacturers will be considered in accordance with the General Conditions.

B. System Description: Aluminum framed, shop fabricated and factory finished fixed louvers. Furnish systems with related flashings, anchorages, and attachment devices. System assembly shall be shop unitized without damage to components or deterioration of seals; and shall accommodate movement within the system, movement between the system and peripheral construction, dynamic loading and release of loads, and deflection of structural support framing. Coordinate with other related sections in Division 23 00 00, HEATING, VENTILATING, AND AIR CONDITIONING (HVAC).

C. Design Conditions: Exterior louvers and fasteners shall be designed to resist a minimum wind load of 30 psf. All louvers shall be rated and tested per AMCA 500-L. In addition, exterior units shall have no more than 0.01 ounces per square foot water penetration at the scheduled airflow volume, or at a free velocity of 900 feet per minute, whichever is greater. All units shall permit passage of air at maximum velocity without blade vibration or noise.

2.02 GENERAL MATERIALS AND ACCESSORIES

A. Manufacturers: Subject to compliance with requirements, provide products of one of the following. The first manufacturer listed is used as the basis of the design in schedules on the Drawings.

1. Ruskin Company.

2. Greenheck Fan Corporation.

3. Construction Specialties Inc.

4. Nailor Industries Inc.

5. Or equal.

B. Aluminum Extrusions: ASTM B221 6063-T5 or 6063-T6 alloy and temper recommended for strength, corrosion resistance, and application of finish, minimum 0.081-inch wall thickness or as specified hereinafter.

C. Sheet Aluminum: ASTM B209 3003, 5005, or 5052 alloy; H15 or H34 temper.

D. Fasteners: Aluminum, non-magnetic stainless steel, epoxy adhesive, or other materials warranted to be noncorrosive and compatible with louver members, trim, hardware, anchors, and other components.

1. Where fasteners screw-anchor into aluminum less than 0.125-inch thick, reinforce the interior with aluminum or nonmagnetic stainless steel to receive screw threads or provide standard noncorrosive pressed-in splined grommet nuts.

2. Do not use exposed fasteners.

E. Anchors, Clips, and Louver Accessories: Aluminum, non-magnetic stainless steel or zinc-coated steel complying with ASTM B633 and with sufficient strength to withstand design pressure indicated.

F. Fabrication: Fabricate to comply with indicated standards and as further specified hereinafter. Include complete system for assembly of components and anchorage.

G. Factory Finishes: Comply with National Association of Architectural Metal Manufacturers (NAAMM) "Metal Finishes Manual" for application and designations of finishes. Designations prefixed by "AA" conform to system established by Aluminum Association for designating aluminum finishes.

Provide either 0.7 mil factory anodized finish or factory fluoropolymer coating finish as specified further below:

1. Anodized Finish: Clear anodized per AAMA 611 "Voluntary Specification for Anodized Architectural Aluminum", AA-M12C22A41 or similar, Architectural Class I, minimum 0.7 mils.

2. Fluoropolymer Finish: High performance organic fluoropolymer coating system, 70 percent polyvinylidene fluoride (PVDF, sometimes called Kynar 500 or Hylar 5000) resin complying with AAMA 2605, minimum one prime coat and two finish coats at 1.2 mils minimum total dry film thickness. Finish coat(s) shall be applied following a thorough cleaning, pretreatment and prime coating of the aluminum extrusions. Cleaning shall include complete submersion in an acid cleaner, an alkali cleaner, an acid deoxidation, an amorphous chrome phosphate conversion coating and an acidulated final rinse. Extrusions shall be dried before application of primer coat. Dry film thickness of the primer coat shall be approximately 0.2 to 0.3 mil after baking at 350 degrees F for 10 to 15 minutes and cooled at ambient temperature. Kynar top coat(s) shall be applied to provide a top coat dry film thickness of approximately 0.8 to 1.2 mils when baked at 450 degrees F for 10 minutes.

H. Sealants: As specified in Section 07 90 00, CAULKING AND SEALANTS.

2.03 FIXED/STATIONARY AIR LOUVERS

A. Performance: Provide louvers that have minimum free area, and maximum pressure drop of each type as listed in manufacturer's current data, complying with the size (panel depth and face dimensions), type, and capacity listed in Louver Schedule on the Drawings.

B. Substrate Compatibility: Provide louvers with frame and sill styles that are compatible with adjacent substrate, and that are specifically manufactured to fit into construction openings with accurate fit and adequate support, for weatherproof installation. Refer to the Drawings and other related specifications for types of substrate which will contain each type of louver.

C. Materials: Architectural fixed louver assembly constructed of aluminum extrusions as specified hereinbefore. Weld units or use stainless steel fasteners. Provide with Z-shaped, sloped baffle style, stormproof blades spaced on 3-inch to 6-inch centers with 35-degree to 45-degree pitch angle; concealed intermediate mullions with profile to suit louver frame; extruded head and sill flashings to required shape of single length in one piece for each location; and interior duct collar if shown on the Drawings. Blades for

exterior louvers shall be drainable style. Reinforce blades with intermediate stiffeners as required. Mullions shall be provided where indicated, or for all louvers greater than 5 feet in width, same material and finish as louvers.

D. Louver Bird and Insect Screens: On inside face of exterior louvers, provide ½-inch to ¾-inch square mesh anodized aluminum wire (minimum 0.06-inch diameter or 0.04-inch to 0.06-inch expanded, flattened) bird screens, and 18 by 16 mesh aluminum insect screens, mounted in removable extruded aluminum frame.

E. Accessories: Provide the following accessories when called out on the Drawings.

1. Aluminum Blank-off Panels: 0.040-inch aluminum sheet, factory installed with removable fasteners and neoprene gaskets.

2. Insulated Aluminum Blank-off Panels: 0.040-inch aluminum sheet, 2-inch aluminum skin insulated core, factory installed with removable fasteners and neoprene gaskets.

3. Hinged Frame: Continuous piano hinge attached to angle or channel subframe.

4. Filter Racks: Formed channel racks to accept standard 1-inch or 2-inch thick filters. Unused bottom portion shall be blanked off with aluminum blank-off panels as specified hereinbefore.

5. Extended Sills: Extruded aluminum, Alloy 6063-T6. Minimum nominal thickness shall be 0.081-inch.

PART 3 EXECUTION

3.01 DELIVERY, STORAGE, AND HANDLING

A. Deliver louvers and all accessories, cartoned or packaged, to prevent damage and deterioration.

1. Properly identify each item.

2. Provide cardboard, separators, banding, spreaders, and paper wrappings to protect units from damage during and after installation.

3. Accept louvers on-site in manufacturer’s packaging. Inspect for damage. Replace damaged units with new, undamaged units.

B. Store louvers and accessories upright according to manufacturer's instructions, in protected dry area, at least 1-inch off ground or floor and at least 1/4-inch between individual pieces.

1. Follow special storage and handling requirements of manufacturer.

2. Protect exposed finish surfaces of prefinished items with masking tape.

3. Store in designated areas as close as possible to point of installation. Protect from weather, dirt, fumes, water, construction debris, and physical damage.

C. Comply with manufacturer's rigging and installation instructions for unloading equipment and moving to final location.

3.02 EXAMINATION AND PREPARATION

A. Examine surfaces and structures to receive the work of this section. Verify that structure walls, openings and other similar items affecting the work in this section are in place and positioned correctly. Verify that rough or masonry opening is correct and the sill plate is level. Do not proceed until unsuitable conditions have been corrected. Starting work constitutes acceptance of conditions as suitable to the proper execution of the work.

B. Take measurements at the site and fabricate work to suit. Verify that field measurements are as indicated on shop drawings, and opening sizes and tolerances are acceptable. No changes will be made in the structure to accommodate this work.

C. Clean opening thoroughly prior to installation. Prepare surfaces using methods recommended by the manufacturer for achieving the best result for the substrate under the project conditions.

3.03 GENERAL LOUVER INSTALLATION

A. Installation: Comply with reference standards, recognized industry practice, the Drawings, and manufacturer's recommendations and instructions for installation of louvers and other components to ensure that products serve intended function. Set louvers plumb, level, and true to line, without warp or rack of frames, and at indicated alignment with adjacent work. Anchor securely in place, permitting sufficient adjustment to accommodate construction tolerances and other irregularities. Provide alignment attachments and shims to permanently fasten system to building structure.

B. Set sill members in a bed of compound or with joint fillers or gaskets to provide weathertight construction. Coordinate installation with wall flashings and other components of the work. Install and align components to drain condensation, water penetrating joints, and moisture migrating within louvers to the exterior.

C. Clean aluminum promptly after installation. Avoid damage to finishes. Remove excess sealant compounds, dirt, and other substances. Repair finishes damaged by cutting, welding, soldering, and grinding. Restore finishes so no evidence remains of corrective work. Return items that cannot be refinished in the field to the factory, make required alterations, and refinish entire unit or provide new units.

D. Aluminum and any other metal surfaces in contact with concrete, cement plaster, or stucco; or any dissimilar metals in contact with each other; shall be coated with manufacturer's specified isolation paint, sealant, or isolation tape, cut to neat line.

E. Louvers shall be erected securely, plumb, level, square, and in proper alignment with other work in accordance with manufacturer's installation instructions. Use concealed anchorages where possible. Provide brass or lead washers fitted to screws where required to protect metal surfaces and to make a weather tight connection. Provide perimeter reveals and openings of uniform width for sealants and joint fillers, as indicated.

F. Installation shall be weathertight. Set with joint fillers or gaskets to provide weathertight construction. Coordinate installation with other components of the work such as attachment and seal of perimeter air and vapor retarder materials. Provide thermal isolation where components penetrate or disrupt building insulation. Pack fibrous insulation in shim spaces at perimeter of assembly to maintain continuity of thermal barrier.

G. Install joint sealants as specified in Section 07 90 00, CAULKING AND SEALANTS.

3.04 PROTECTION, ADJUSTMENT, AND CLEANING

A. Protect installed louvers and accessories against damage from other construction work. Protect aluminum surfaces from contact with contaminating substances resulting from construction operations. In addition, monitor surfaces adjacent to and below exterior concrete and masonry surfaces during construction for presence of dirt, scum, alkaline deposits, stains, or other contaminants. If contaminating substances do contact louver surfaces, remove contaminants immediately according to manufacturer's written recommendations.

B. Restore louvers and accessories damaged during installation and construction so no evidence remains of corrective work. If results of restoration are unsuccessful, as determined by Engineer/Architect, remove damaged units and replace with new units. Touch up minor abrasions in finishes with air-dried coating that matches color and gloss of, and is compatible with, factory-applied finish coating.

C. After erection, the Contractor shall protect exposed portions from damage by machines, plaster, line, paint, acid cement, or other harmful compounds. The Contractor shall be responsible for removal of protective materials and cleaning with plain water, water with soap, or household detergent.

D. Clean exposed surfaces of louvers and accessories that are not protected by temporary covering, to remove fingerprints and soil during construction period. Do not let soil accumulate until final cleaning. Upon completion and before final acceptance, clean exposed surfaces of louvers and frames thoroughly with water and a mild soap or detergent not harmful to finishes. Thoroughly rinse surfaces and dry. Remove any smears and other unsightly marks.

END OF SECTION 23 33 30

(This page intentionally left blank)

PART 1 GENERAL

1.01 WORK INCLUDED

A. This section covers work for furnishing and installing air grilles, registers, and/or diffusers for HVAC systems on this project, complete.

1.02 GENERAL REQUIREMENTS

A. Also see the GENERAL CONDITIONS, Division 01 00 00, GENERAL REQUIREMENTS, and Section 22 01 00, GENERAL REQUIREMENTS OF PLUMBING AND HVAC which contain information and requirements that apply to the work specified herein and are mandatory for this project.

B. Like items of equipment or materials provided hereunder shall be the end products of one manufacturer to achieve standardization for appearance, maintenance, and replacement, and shall include all necessary appurtenances for a complete and working system. The equipment or materials shall be the product of a manufacturer regularly engaged in the production of equipment or materials for the specified use. The manufacturer shall have the sole responsibility for the proper functioning and coordination of the equipment or materials as furnished.

C. The Contractor or their sub-contractors shall provide all required miscellaneous equipment and materials, as shown on the Drawings and in accordance with these Specifications. The Contractor or their sub-contractors shall furnish all equipment and material items, whether specified or not, as necessary to provide a complete, operable HVAC system.

1.03 SUBMITTALS

A. Submittals shall be provided as specified in Section 01 33 00, SUBMITTALS and Section 22 01 00, GENERAL REQUIREMENTS OF PLUMBING AND HVAC.

B. Submit product data on all grilles, registers, and diffusers used on this project. Submit a schedule of all air inlets and outlets showing manufacturer, type, size, location, application, and noise level.

1.04 SOURCE QUALITY CONTROL

A. Verification of Performance: Rate diffusers, registers, and grilles according to American Society of Heating, Refrigerating, and Air Conditioning Engineers (ASHRAE) 70, "Method of Testing for Rating the Performance of Air Outlets and Inlets."

1.05 PROJECT CONDITIONS

A. Unless stated otherwise, the environment and air streams can include varying concentrations of the following chemical components:

1. Hydrogen Sulfide.

2. Grease.

3. Condensation.

PART 2 PRODUCTS

2.01 GRILLES, REGISTERS, AND DIFFUSERS

A. Manufacturers: Subject to compliance with requirements, provide products by one of the following:

1. Price Industries.

2. Krueger.

3. Nailor Industries Inc.

4. Titus.

5. Or equal.

B. See the Grilles Registers and Diffusers Schedule on the Drawings for grille, register or diffuser type; mounting; capacities; characteristics; finish; etc.

C. Coordinate the color and finish of all grilles, registers, and diffusers with the Engineer if not specifically listed in the Grilles Registers and Diffusers Schedule.

D. Substituted grilles, registers and diffusers must meet or exceed the performance of the scheduled grille, register, or diffuser.

PART 3 EXECUTION

3.01 INSTALLATION

A. Verify opening sizes and locations before installation. Install grilles, registers and diffusers level and plumb per the manufacturer's instructions.

B. Outlets and Inlets: The Drawings indicate the general arrangement of ducts, fittings, and accessories. Air outlet and inlet locations have been indicated to achieve the design requirements for air volume, noise criteria, airflow pattern, throw, and pressure drop. Make final locations where indicated, as much as practical. For units installed in lay-in ceiling panels, locate units in the center of a panel. Where architectural or structural features or other items conflict with the installation, notify the Engineer for a determination of the final location.

C. Install grilles, registers, and diffusers with airtight connections to ducts and to allow service and maintenance of dampers, air extractors, and fire dampers.

D. Provide all duct transitions and duct fittings required for a complete installation.

E. Installed air diffusion devices shall not flutter, rattle, or vibrate.

3.02 PROTECTION AND ADJUSTING

A. Protect installed products until completion of project.

B. Touch-up, repair, or replace damaged products before Substantial Completion.

C. After installation, adjust grilles, registers, and diffusers to the air patterns indicated, or as directed, before starting air balancing work. Comply with the requirements specified in Section 23 05 93, TESTING, ADJUSTING, AND BALANCING FOR HVAC for testing, adjusting, and balancing procedures.

END OF SECTION 23 37 13

(This page intentionally left blank)

PART 1 - GENERAL

1.01 PACKAGED AIR HANDLER UNITS

Self-Contained Air Handler with Direct Expansion Air Conditioning

PART 2 - PRODUCTS

2.01 GERNERAL REQUIREMENTS:

1. Outdoor, concrete pad mounted, electrically controlled, heating and cooling unit utilizing a fully hermetic scroll compressor(s) for cooling duty and heat pump heating duty.

2. Factory assembled, single-piece heating and cooling unit. Contained within the unit enclosure shall be all factory wiring, piping, controls, and special features required prior to field start-up.

3. Unit shall use Puron® (R-410A) refrigerant.

4. Unit shall be installed in accordance with the manufacturer's instructions.

5. Unit must be selected and installed in compliance with local, state, and federal codes.

B. Quality Assurance:

1. Unit meets ASHRAE 90.1 minimum efficiency requirements.

2. Unit shall be rated in accordance with AHRI Standards.

3. Unit shall be designed to conform to ASHRAE 15.

4. Unit shall be UL-tested and certified in accordance with ANSI Z21.47 Standards and UL-listed and certified under Canadian standards as a total package for safety requirements.

5. Insulation and adhesive shall meet NFPA 90A requirements for flame spread and smoke generation.

6. Unit casing shall be capable of withstanding 500 hour salt spray exposure per ASTM B117 (scribed specimen).

7. Unit shall be designed in accordance with ISO 9001, and shall be manufactured in a facility registered by ISO 9001:2015.

8. Unit shall be subjected to a completely automated run test on the assembly line. The data for each unit will be stored at the factory, and must be available upon request.

9. Unit shall be designed in accordance with UL Standard 1995, including tested to withstand rain.

10. Unit shall be constructed to prevent intrusion of snow and tested to prevent snow intrusion into the control box up to 40 mph.

11. Unit shake tested to assurance level 1, ASTM D4169 to ensure shipping reliability.

C. Delivery, Storage, and Handling:

1. Unit shall be stored and handled per manufacturer’s recommendations.

2. Lifted by crane requires either shipping top panel or spreader bars.

3. Unit shall only be stored or positioned in the upright position.

D. Project Conditions:

1. As specified in on the drawings.

E. (Operating Characteristics:

1. Unit shall be capable of starting and running at 115°F (46°C) ambient outdoor temperature, meeting maximum load criteria of AHRI Standard 210/240 or 340/360 at ±10% voltage.

2. Compressor with standard controls shall be capable of operation down to 40°F (4°C), ambient outdoor temperatures. Accessory winter start kit is necessary for mechanically cooling at ambient temperatures down to 25°F (–4°C).

3. Unit shall discharge supply air horizontally as shown on contract drawings.

F. Electrical Requirements:

1. Main power supply voltage, phase, and frequency must match those required on the Drawings.

G. Unit Cabinet:

1. Unit cabinet shall be constructed of galvanized steel, and shall be bonderized and coated with a prepainted baked enamel finish on all externally exposed surfaces.-

2. Unit cabinet exterior paint shall be: film thickness, (dry) 0.003-in. minimum, gloss (per ASTM D523, 60°F/16°C): 60, Hardness: H-2H Pencil hardness.

3. Evaporator fan compartment interior cabinet insulation shall conform to AHRI Standards 210/240 and or 340/360 minimum exterior sweat criteria. Interior surfaces shall be insulated with a minimum $^1/_2$-in. thick, 1 lb density, flexible fiberglass insulation, neoprene coated on the air side. Aluminum foil-faced fiberglass insulation shall be used in the heat compartment.

4. Base of unit shall have a minimum of four locations for thru-the-base gas and electrical connections (factory-installed or field-installed), standard.

5. Base Rail:

    a. Unit shall have base rails on a minimum of 2 sides.

    b. Holes shall be provided in the base rails for rigging shackles to facilitate maneuvering and overhead rigging.

    c. Holes shall be provided in the base rail for moving the rooftop by fork truck.

    d. Base rail shall be a minimum of 16 gage thickness.

6. Condensate pan and connections:

    a. Shall be a sloped condensate drain pan made of a corrosion resistant material.

    b. Shall comply with ASHRAE Standard 62.

    c. Shall use a $^{3}/_{4}$-in. 14 NPT drain connection, possible either through the bottom or side of the drain pan. Connection shall be made per manufacturer's recommendations.

7. Top panel:

    a. Shall be a single piece top panel on all sizes.

8. Electrical Connections:

    a. All unit power wiring shall enter unit cabinet at a single, factory prepared, knockout location.

    b. Thru-the-base capability.

1) Standard unit shall have a thru-the-base electrical location(s) using a raised, embossed portion of the unit basepan.

9. Component access panels (standard):

   a. Cabinet panels shall be easily removable for servicing.

   b. Unit shall have one factory installed, tool-less, removable, filter access panel.

   c. Panels covering control box, indoor fan, indoor fan motor, gas components (where applicable), and compressors shall have molded composite handles.

   d. Handles shall be UV modified, composite. They shall be permanently attached, and recessed into the panel.

   e. Screws on the vertical portion of all removable access panel shall engage into heat resistant, molded composite collars.

   f. Collars shall be removable and easily replaceable using manufacturer recommended parts.

H. Coils:

1. Standard industry proven Aluminum Fin-Copper Tube Coils:

   a. Standard evaporator and condenser coils shall have aluminum lanced plate fins mechanically bonded to seamless internally grooved copper tubes with all joints brazed.

   b. Evaporator coils shall be leak tested to 150 psig, pressure tested to 450 psig, and qualified to UL 1995 burst test at 1775 psig.

   c. Condenser coils shall be leak tested to 150 psig, pressure tested to 650 psig, and qualified to UL 1995 burst test at 1980 psig.

I. Refrigerant Components:

1. Refrigerant circuit shall include the following control, safety, and maintenance features:

   a. Fixed cooling orifice metering system on 04-06 models and TXV on 07 size models shall include a multiple feed distribution system that optimizes coil performance. Fixed heating orifice metering system on all 04-07 models shall include a multiple feed distribution system that optimizes coil performance.

   b. Refrigerant filter drier - Solid core design.

   c. Service gage connections on suction and discharge lines.

   d. Pressure gage access through a specially designed access port in the top panel of the unit.

   e. Suction line accumulator to provide protection in all operating modes from cooling, heating and reverse cycle switching.

2. There shall be gage line access port in the skin of the rooftop, covered by a black, removable plug.

   a. The plug shall be easy to remove and replace.

   b. When the plug is removed, the gage access port shall enable maintenance personnel to route their pressure gage lines.

   c. This gage access port shall facilitate correct and accurate condenser pressure readings by enabling the reading with the compressor access panel on.

   d. The plug shall be made of a leak proof, UV-resistant, composite material.

3. Compressors:

   a. Unit shall use fully hermetic, heat pump duty scroll compressor on single circuit independent refrigeration circuit.

   b. Compressor motors shall be cooled by refrigerant gas passing through motor windings.

   c. Compressors shall be internally protected from high discharge temperature conditions.

   d. Compressors shall be protected from an over-temperature and over-amperage conditions by an internal, motor overload device.

   e. Compressor shall be factory mounted on rubber grommets.

   f. Compressor motors shall have internal line break thermal, current overload and high-pressure differential protection.

   g. Crankcase heaters shall not be required for normal operating range, unless required by compressor manufacturer due to refrigerant charge limits.

   h. Compressor shall be a two stage cooling capacity design.

J. Filter Section:

1. Filters access is specified in the unit cabinet section of this specification.

2. Filters shall be held in place by a pivoting filter tray, facilitating easy removal and installation.

3. Shall consist of factory installed, low velocity, throw-away 2-in. thick fiberglass filters.

4. Filters shall be standard, commercially available sizes.

5. Only one size filter per unit is allowed.

K. Evaporator Fan and Motor:

1. Direct Drive Evaporator fan motor:

   a. Shall be a ECM motor design.

   b. Shall have permanently lubricated bearings.

   c. Shall have inherent automatic-reset thermal overload protection.

   d. Shall have slow ramp up to speed capabilities.

   e. Shall require no fan/motor belts for operation, adjustments and or initial fan speed set up.

   f. Fan DC voltage set up on Unit Control Board can eliminate the need of removal of blower access door, required on conventional belt drive systems.

   g. Shall be internally protected from electrical phase reversal and loss.

2. Evaporator Fan:

   a. On 07 size model with two stage cooling capacity control, the indoor fan speed is automatically controlled to meet the code-compliant 66% low fan speed and 100% at full fan speed operation.

   b. Blower fan shall be a Vane Axial fan design with 75% less moving parts than a conventional belt drive system.

   c. Shall be constructed of a cast aluminum stator and high impact composite material on rotor and air inlet casing.

d. Shall be a patented / pending design with a corrosion resistant material and dynamically balanced.

e. Shall have slow ramp up to speed capabilities to help reduce sound and comfort issues typically associated with single speed belt drive systems.

f. Shall be a slide out design with two screw removal.

3. Shall include an easily accessible unit Control Board to conveniently and safely provide connection points for vital control functions such as: smoke detectors, phase monitor, economizer, thermostat, DDC control options, and low and high pressure switches. Controller shall also provide an intuitive means to adjust the indoor fan speed through a simple switch and pot adjustment design.

L. Condenser Fans and Motors:

1. Condenser fan motors:

a. Shall be a totally enclosed motor.

b. Shall use permanently lubricated bearings.

c. Shall have inherent thermal overload protection with an automatic reset feature.

d. Shall use a shaft-down design on all sizes.

2. Condenser Fans:

a. Shall be a direct-driven propeller type fan constructed of high impact composite mate-rial.

b. Shall have high impact composite blades completely formed into one piece without blade fasteners or connectors and shall be dynamically balanced.

M. Special Features Options and Accessories:

1. Economizer. Field-installed

   a. Integrated, gear driven opposing modulating blade design type capable of simultaneous economizer and compressor operation.

   b. Independent modules for vertical or horizontal return configuration shall be available. Vertical return modules shall be available as a factory installed option.

   c. Damper blades shall be galvanized steel with composite gears. Plastic or composite blades on intake or return shall not be acceptable.

   d. Shall include all hardware and controls to provide free cooling with outdoor air when temperature and/or humidity are below set-points.

   e. Shall be equipped with gear driven dampers for both the outdoor ventilation air and the return air for positive air stream control.

   f. Standard leak rate shall be equipped with dampers not to exceed 2% leakage at 1 in. wg pressure differential.

   g. Shall be capable of introducing up to 100% outdoor air.

   h. Shall be equipped with a barometric relief damper capable of relieving up to 100% return air and contain seals that meet ASHRAE 90.1 requirements.

   i. Shall be designed to close damper(s) during loss-of-power situations with spring return built into motor.

   j. Dry bulb outdoor air temperature sensor shall be provided as standard. Outdoor air sensor setpoint shall be adjustable and shall range from 40°F to 100°F (4°C to 38°C). Additional sensor options shall be available as accessories.

k. The economizer controller shall also provide control of an accessory power exhaust unit function. Factory set at 100%, with a range of 0% to 100%.

l. The economizer shall maintain minimum airflow into the building during occupied period and provide design ventilation rate for full occupancy.

m. Dampers shall be completely closed when the unit is in the unoccupied mode.

n. Economizer controller shall accept a 2 to 10 vdc CO_2 sensor input for IAQ/DCV control. In this mode, dampers shall modulate the outdoor air damper to provide ventilation based on the sensor input.

o. Compressor lockout temperature on W7220 control is adjustable from –45°F (–43°C) to 80°F (27°C), set at a factory default of 32°F (0°C). W7212 control opens at 35°F (2°C) and closes at 50°F (10°C).

p. Actuator shall be direct coupled to economizer gear. No linkage arms or control rods shall be acceptable.

q. Economizer controller shall provide indications when in free cooling mode, in the DCV mode, or the exhaust fan contact is closed.

2. Integrated Economizer

a. Integrated, gear driven opposing modulating blade design type capable of simultaneous economizer and compressor operation.

b. Independent modules for vertical or horizontal return configuration shall be available. Vertical return modules shall be available as a factory-installed option.

c. Damper blades shall be galvanized steel with composite gears. Plastic or composite blades on intake or return shall not be acceptable.

d. Shall include all hardware and controls to provide free cooling with outdoor air when temperature and/or humidity are below setpoints.

e. Shall be equipped with gear driven dampers for both the outdoor ventilation air and the return air for positive air stream control.

1) Sensor failure loss of communication identification.

2) Automatic sensor detection.

3) Capabilities for use with multiple-speed indoor fan systems.

4) Utilize digital sensors: Dry bulb and Enthalpy.

f. Shall be capable of introducing up to 100% outdoor air.

g. Shall be equipped with a barometric relief damper capable of relieving up to 100% return air and contain seals that meet ASHRAE 90.1 requirements.

h. Shall be designed to close damper(s) during loss-of-power situations with spring return built into motor.

i. Dry bulb outdoor air temperature sensor shall be provided as standard. Enthalpy sensor is also available on factory installed only. Outdoor air sensor setpoint shall be adjustable and shall range from 40°F to 100°F (4°C to 38°C). Additional sensor options shall be available as accessories.

j. The economizer controller shall also provide control of an accessory power exhaust unit function. Factory set at 100%, with a range of 0% to 100%.

k. The economizer shall maintain minimum airflow into the building during occupied period and provide design ventilation rate for full occupancy.

l. Dampers shall be completely closed when the unit is in the unoccupied mode.

m. Compressor lockout temperature on W7220 control is adjustable from –45°F (–43°C) to 80°F (27°C), set at a factory default of 32°F (0°C). W7212 control opens at 35°F (2°C) and closes at 50°F (10°C).

n. Actuator shall be direct coupled to economizer gear. No linkage arms or control rods shall be acceptable.

o. Economizer controller shall provide indications when in free cooling mode, in the DCV mode, or the exhaust fan contact is closed.

3. Low Ambient Control Package:

a. Controller shall control coil head pressure by condenser fan speed modulation or condenser fan cycling and wind baffles.

b. Shall consist of solid-state control and condenser coil temperature sensor to maintain condensing temperature between 90°F (32°C) and 110°F (43°C) at outdoor ambient temperatures down to –20°F (–29°C).

4. Propeller Power Exhaust:

a. Power exhaust shall be used in conjunction with an integrated economizer.

b. Independent modules for vertical or horizontal return configurations shall be available.

c. Horizontal power exhaust is shall be mounted in return ductwork.

d. Power exhaust shall be controlled by economizer controller operation. Exhaust fans shall be energized when dampers open past the 0 to 100% adjustable setpoint on the economizer control.

5. Smoke detectors (factory-installed only):

a. Shall be a four-wire controller and detector.

b. Shall be environmental compensated with differential sensing for reliable, stable, and drift-free sensitivity.

c. Shall use magnet-activated test/reset sensor switches.

d. Shall have tool-less connection terminal access.

e. Shall have a recessed momentary switch for testing and resetting the detector.

f. Controller shall include:

1) One set of normally open alarm initiation contacts for connection to an initiating device circuit on a fire alarm control panel.

2) Two Form-C auxiliary alarm relays for interface with rooftop unit or other equipment.

3) One Form-C supervision (trouble) relay to control the operation of the Trouble LED on a remote test/reset station.

4) Capable of direct connection to two individual detector modules.

5) Can be wired to up to 14 other duct smoke detectors for multiple fan shutdown applications.

6. Winter Start Kit:

a. Shall contain a bypass device around the low pressure switch.

b. Shall be required when mechanical cooling is required down to 25°F (–4°C).

c. Shall not be required to operate on an economizer when below an outdoor ambient of 40°F (4°C).

7. Time Guard Control Circuit:

a. Shall prevent compressor short-cycling by providing a 5 minute delay (±2 minutes) before restarting a compressor after shutdown for any reason.

b. One device shall be required per compressor.

8. Hinged Access Panels:

a. Shall provide easy access through integrated quarter turn latches.

b. Shall be on major panels of: filter, control box, fan motor, and compressor.

9. Condensate overflow switch:

a. This sensor and related controller monitors the condensate level in the drain pan and shuts down compression operation when overflow conditions occur. It includes:

1) Indicator light — solid red (more than 10 seconds on water contact – compressors disabled), blinking red (sensor disconnected).

2) 10 second delay to break — eliminates nuisance trips from splashing or waves in pan (sensor needs 10 seconds of constant water contact before tripping).

3) Disables the compressor(s) operation when condensate plug is detected, but still allows fans to run for Economizer.

10. MERV-8 Return Air Filters

11. Phase Monitor Control:

a. Shall monitor the sequence of three phase electrical system to provide a phase reversal protection.

b. Shall monitor the three phase voltage inputs to provide a phase loss protection for the three phase device.

c. Will work on either a Delta or Wye power connection.

PART 3 - EXECUTION

3.1 INSTALLATION

A. General: Install unit in accordance with the manufacturers written instructions.

B. Unit Location:

1. Coordinate unit mounting with provided concrete equipment pad..

C. Vibration Isolation:

1. Provide flexible duct connections at unit duct flanges.

D. Sound Control:

1. Provide continuous acoustic insulation treatment of the duct until after the first elbow or tee.

E. Testing and Balancing:

1. Inspect installation

2. Verify motor rotation.

3. Verify operation of dampers and damper actuators.

4. Verify sequence of operations.

5. See section 23 05 93, TESTING, ADJUSTING, AND BALANCING FOR HVAC

3.2 FIELD QUALITY CONTROL

A. Perform the following tests and inspections with the assistance of a factory-authorized service representative:

1. Inspect for and remove shipping bolts, blocks, and tie-down straps.

2. After installing units and after electrical circuitry has been energized, test for compliance with requirements.

3. Operational Test: After electrical circuitry has been energized, start units to confirm proper motor rotation and unit operation.

4. Test and adjust controls and safeties. Replace damaged and malfunctioning controls and equipment.

END OF SECTION 23 81 19

(This page intentionally left blank)

PART 1 GENERAL

1.01 SUMMARY

A. The requirements listed in this section are supplemental to the Division 01 General Requirements.

B. It shall be the responsibility of the Electrical and Low-voltage Contractors to examine and refer to all Architectural, Civil, Structural, Mechanical, Plumbing and Landscape drawings and specifications for construction conditions which may affect the scope of Electrical, Communications, Electronic Safety and Security work. Inspect the building site and existing facilities for verification of present conditions. Make proper provisions for these conditions in performance of the work and cost thereof.

C. Electrical, Communications, Electronic Safety and Security work for this project shall include all items, articles, materials and the associated labor mentioned, schedules or shown in these specifications and in the accompanying drawings.

D. Furnish and install all equipment, materials and any required incidental items required by good practice to complete the systems described herein.

E. Refer to Division 01 00 00 for all listed Alternates and provide separate pricing and work as indicated in Division 01 00 00 and Contract Documents.

1.02 DEFINITIONS - THROUGHOUT CONTRACT DOCUMENTS THESE WORDS AND PHRASES ARE USED:

A. Contract documents - All drawings, specifications, addenda and change orders that document work to be done.

B. Demolition – Carefully disconnect and remove items. All reasonable caution shall be taken to avoid damaging removed equipment and to retain its operability.

C. Remove back to source - Remove all conduit and wire back to panelboard or last live device.

D. Equivalent or equal - Product of like type and function that complies with all applicable provisions of drawings and specifications and which has been approved as substitute for specified item.

E. Furnish - Purchase material as shown and specified, and place material to approved location on site or elsewhere as noted or agreed upon.

F. Install - Set in place and connect, ready for use and in complete and properly operating finished condition.

G. Provide - Furnish and install with all products, labor, sub-contracts, and appurtenances required for a complete and properly operating, finished condition.

H. Rough-in - Provide conduit raceway system with junction boxes, fittings, straps, BUSHINGS, etc., for future installation of wiring, devices, disconnects and breakers. Provision shall be made in panelboard (hardware, etc.) for future installation of breakers.

I. Serviceable - Arranged so that component or product in question may be properly removed and replaced without disassembly, destruction or damage to surrounding installation.

1.03 CODES, STANDARDS AND REGULATIONS

A. Codes - Perform all work in strict accordance with all applicable national, state and local codes; including, but not limited to latest legally enacted editions of following codes:

1. NFPA 70, National Electric Code – NEC

2. NFPA 72, National Fire Alarm Code

3. ANSI-C2, National Electrical Safety Code – NESC

4. International Building Code – IBC

5. International Fire Code – IFC

6. International Energy Conservation Code – IECC

B. Standards - Reference to standards infers that installation, equipment and material shall be within limits for which it was designed, tested and approved, in conformance with current publications and standards of following organizations:

1. American National Standards Institute – ANSI

2. American Society for Testing and Materials – ASTM

3. American Society of Heating Refrigerating and Air Conditioning Engineers – ASHRAE (Standard 90-75)

4. Institute of Electrical and Electronics Engineers – IEEE

5. Insulated Cable Engineers Association – ICEA

6. National Electrical Contractors Association – NECA

7. National Electrical Manufacturers' Association – NEMA

8. National Fire Protection Association – NFPA

9. Occupational Safety and Health Administration – OSHA

10. Underwriters' Laboratories, Inc. – UL

11. Rules and Regulations of the State/Local Fire Marshal

12. Standards and Requirement of the Serving Utilities

13. State and Local Ordinances

C. Regulations - Design has been performed in accordance with applicable regulations and guidelines noted below. Contractor shall carefully apply these regulations and bring any discrepancies to immediate attention of Engineer.

1. Americans with Disabilities Act – ADA

1.04 FEES AND PERMITS

A. Electrical Contractor shall pay for all permits or fees in connection with electrical work. Fees shall include any or all user fees, government fees, system development fees, connection fees or other fees that are required to be paid before systems can be connected or used.

B. Schedule all required electrical inspections with local electrical inspector. Notify engineer of all items of discrepancy noted by electrical inspector if those items affect cost or function of system, or if they conflict with electrical drawings and specifications.

C. All Utility Cost and fees from the utility work shall be the responsibility of the Owner. Contractor to coordinate all utility requirements, standards and responsibilities with serving utility for a complete scope of work prior to bid.

D. Deliver all inspection certificates to Engineer prior to final acceptance of work.

1.05 INTENT OF SPECIFICATIONS AND DRAWINGS

A. Plans and specifications are intended to result in complete electrical installation in full compliance with all applicable codes, standards and ordinances.

B. Plans and specifications are to supplement each other and any details contained in one shall be included as if contained in both.

C. Electrical drawings shall serve as working drawings, but Architectural drawings shall take precedence if any dimensional discrepancies exist.

D. Drawings are partly diagrammatic and do not show routing of conduits, exact location of products, or installation features in exact detail. Locations of devices, fixtures and equipment are approximate unless dimensioned.

E. Riser diagrams and control schematics are not to scale and do not show physical arrangement of equipment. Do not use riser diagrams or schematics to obtain lineal conduit and cabling distances.

F. Items are shown on drawings in locations to minimize interference with other equipment, structural members, etc. Exact finish locations are not indicated, however, and all work shall be done to avoid interference, preserve headroom and keep openings and passageways clear.

G. In event that discrepancies of any kind exist or required items/details have been omitted, Contractor shall notify Engineer in writing of such discrepancy or omission at least ten days prior to bid date. Failure to do so shall be construed as willingness of Contractor to supply all necessary materials and labor required for proper completion of work.

1.06 CONTRACTOR'S RESPONSIBILITY

A. Contractor shall be responsible for installation of complete and functional piece of work in accordance with true intent of contract documents. Provide all incidental items required for complete installation and satisfactory operation of all equipment, whether or not specifically noted in contract documents.

B. QUALIFICATIONS

1. Contractor shall employ on this project, capable, experienced and reliable foreman and such skilled workmen as may be required for various classes of work to be performed.

2. Where special skills and certification are required, Contractor shall ensure that work is performed by individuals with required experience, skill and certification.

3. If, in Engineer's opinion, Contractor's employees do not possess necessary qualifications to perform specialty work, Contractor will be required to obtain services of workmen who are approved by manufacturer and certified by applicable agency or group. These workmen, if required, shall be provided at no additional expense.

4. Refer to other specification sections for additional required contractor qualifications and certification.

C. LICENSING AND CERTIFICATION - All Division 26 00 00 work shall be accomplished by Electricians, licensed by state in which work is being done, certified as required, and skilled in their craft. Electrician may elect to hire subcontractors for portions of work (such as systems described in Divisions 27 00 00 and 28 00 00) who are not licensed electricians, but have required certificates and are licensed in their discipline by state in which work is being done.

D. COORDINATION

1. Contractor shall consult all contract documents, shop drawings of other trades, and actual building dimensions to predetermine that his work and equipment will fit as planned. Do not scale drawings for fabrication. No extra payment will be issued for materials or items which do not fit because of Contractor's failure to verify as-built building dimensions.

2. Contractor shall check location of fixtures, outlets, equipment, conduit, etc., to determine they clear all openings, structural members, piping, ducts and miscellaneous equipment having fixed locations.

3. Changes in location of electrical work, necessary due to obstacles or installation of other trades shown on contract documents, shall be made by Electrical Contractor at no extra cost.

4. Contractor shall coordinate with Plumbing and Mechanical Contractors to avoid installation of piping and ductwork above or below panelboards in violation of National Electrical Code.

5. Lay out all work in advance and avoid conflict with other work in progress. Physical dimensions shall be determined from architectural and structural plans. Verify locations for junction boxes, disconnect switches, stub-ups, etc., for connection to equipment furnished by others, or in other Divisions of this work.

6. Contractor shall coordinate and plan work to proceed with work of other trades.

7. Contractor shall inform General Contractor of all required openings in building structure for installation of electrical equipment.

8. Contractor shall check dimensions of all electrical equipment installed, provided by himself or by others, so correct clearances and connections can be made.

9. Consulting all contract documents and shop drawings of other trades, contractor shall determine where electrical junction/pull boxes and equipment can be installed to maintain proper accessibility. Where accessibility cannot be maintained by judicious placement of boxes, Electrical Contractor shall coordinate with General Contractor to provide, fabricate, install, adjust, paint, etc. access doors through non-accessible floor, wall, and ceiling finishes to allow access to all electrical junction and pull boxes, electrical devices, electrical equipment, etc. at all required locations whether shown or not shown on plans. Electrical Contractor is responsible for determining size and location of the access doors. Report any conflicts to Engineer.

1.07 REVIEW

A. All work and material is subject to review at any time by the Engineer or his representative. If the Engineer or his representative finds material that does not conform to these specifications or that is not properly installed or finished, correct the deficiencies in a manner satisfactory to the Engineer at the Contractor's expense.

1.08 TEMPORARY FACILITIES

A. ELECTRICAL UTILITIES

1. The Electrical Contractor shall provide temporary electrical power to the construction site as directed by the General Contractor. No connections to the owner's system shall be allowed without owner's written approval. Provide a separate utility service as required.

2. The Electrical Contractor shall provide temporary electrical power to job trailers as directed by the General Contractor.

3. The Electrical Contractor shall provide temporary communications to job trailers as directed by the General Contractor.

4. All Costs associated with temporary power, communications and utility cost shall be paid by to the General Contractor.

5. The Electrical Contractor shall provide temporary construction lighting as directed by the General Contractor to provide a safe working environment.

6. All temporary services are to be removed in their entirety prior to occupancy as directed by the General Contractor.

B. OFFICES

1. The Electrical Contractor must have the permission of the Owner and General Contractor or Construction Manager to install a temporary office/job trailer on the project site.

2. Contractor shall completely remove his temporary installations when no longer needed and the premises shall be completely clean, disinfected, patched, and refinished to match adjacent areas.

C. LADDERS AND SCAFFOLDS

1. The Electrical and Low-voltage Contractors shall provide their own ladders, scaffolds, etc. of substantial construction for access to their work in various portions of the building as may be required. When no longer needed, they shall be removed by the Contractor.

D. PROTECTION DEVICES

1. The Electrical and Low-voltage Contractors shall provide and maintain their own necessary barricades, fences, signal lights, etc., required by all governing authorities or shown on the drawings. When no longer needed, they shall be removed by the Contractor.

E. TEMPORARY FIRE PROTECTION

1. The Electrical and Low-voltage Contractors shall provide all necessary first aid hand fire extinguishers for Class A, B, C and special hazards as may exist in his own work area only in accordance with good and safe practice and as required by jurisdictional safety authority.

1.09 RECORD DOCUMENTS (AS-BUILT DRAWINGS)

A. See requirements regarding record documents in General Division and Division 01 00 00.

B. At beginning of work, Contractor shall set aside one complete set of drawings which shall be maintained as complete "As-Built" set. Drawings shall be updated daily in neat and legible manner and shall not be used for any other purpose. Drawings, specification, addenda, change orders, etc. shall be maintained at job site and available for review at any time.

C. Show dimensioned location and routing of all electrical work that will become permanently concealed, cast in concrete or buried underground.

D. Show complete routing and sizing of any significant revisions to systems shown.

E. Show provisions for future connection, referenced to building lines or approved bench marks.

F. Provide wiring diagrams for all individual communications systems as installed. Identify all components and show all wire and terminal numbers and connections.

G. At completion of project, deliver drawings to Engineer for review.

1.10 WARRANTY

A. The Contractor shall guarantee that all materials and labor installed are new and of first quality and that any material or labor found defective shall be replaced without cost to the Owner within two (2) years after substantial completion of the Contract or two (2) full seasons of heating and cooling operation, whichever is the greater. The guarantee shall list the date of the beginning of the two (2) year period, which shall be the date that the Substantial Completion Certificate is issued.

B. Any damage to the building, caused by defective work or material of the Contractor within the above-mentioned period, shall be satisfactorily repaired without cost to the Owner.

C. The guarantee does not include maintenance of equipment. The Owner shall accept full responsibility for proper operation and maintenance of equipment immediately upon substantial completion and occupancy of the building.

D. Final acceptance by the Owner will not occur until all operating instructions are mounted in Equipment Rooms and Operating Personnel thoroughly indoctrinated in the operation of all electrical equipment by the Contractor.

E. No equipment installed as part of this project shall be used for temporary heat during construction.

PART 2 PRODUCTS

2.01 MATERIALS AND EQUIPMENT

A. Manufacturer’s trade names and catalog numbers listed are intended to indicate the quality of equipment or materials desired. Manufacturers not listed in the specification will be considered substitutions and must have prior approval.

B. See Division 01 00 00 for Substitutions Procedures. Requests for substitution are to be submitted sufficiently ahead of the deadline, to give ample time for examination. Prior approval request for substitution must indicate the specific item or items to be furnished in lieu of those scheduled, together with complete technical and comparative data on scheduled items and items proposed for substitution.

C. If the engineer approves any proposed substitution, the approved product will be listed in an addendum. Bidders shall not rely on approval made in any other manner.

D. Electrical equipment may be installed with manufacturer's standard finish and color except where specific color, finish or choice is indicated. If the manufacturer has no standard finish, equipment shall have a prime coat and two finish coats of gray enamel.

E. High altitude operation: Capacity of all equipment is to be sized and manufactured to perform at the elevation of the project site. If not specifically indicated in the equipment schedule or in the specifications provide all required accessories and equipment for proper operation at elevation of the project site.

F. This Contractor shall be responsible for materials and equipment installed under this contract. Contractor shall also be responsible for the protection of materials and equipment of others from damage as a result of his work.

G. Manufactured material and equipment shall be applied, installed, connected, erected, used, cleaned and conditioned as directed by manufacturer unless herein specified to the contrary.

H. This Contractor shall make the required arrangement with General Contractor or Construction Manager for the introduction into the building of equipment too large to pass through finished openings.

I. Store materials and equipment indoors at the job site or, if this is not possible, store on raised platforms and protect from the weather by means of waterproof covers. Coverings shall permit circulation of air around the materials to prevent condensation of moisture. Screen or cap openings in equipment to prevent the entry of vermin.

2.02 SUBSTITUTION OF MATERIALS

A. Where substituted equipment requires structural, architectural, mechanical, plumbing or electrical work that differs from basic design, cost of all changes, including re-design, shall be responsibility of contractor using substitution.

B. APPROVED MANUFACTURERS

1. In general, one particular manufacturer and part number or series is listed to describe equipment. Equivalent equipment of other manufacturers listed for that item may be substituted without prior approval. It shall be Contractor's responsibility to ensure that item used for bidding purposes is truly equivalent to that specified. If it is not

equivalent, it will be rejected at shop drawing review and Contractor shall supply specified item at his own cost.

2. It is understood that manufacturers listed may not actually have equivalent product to that specified. If contractor/distributor has any questions regarding desired product characteristics and suitability of proposed substitution, he is encouraged to submit for prior approval. Also, any manufacturer not listed shall be submitted for prior approval.

C. PRIOR APPROVALS

1. Manufacturers not listed in specification or on schedule for a particular item are open for substitution prior to bid opening only.

2. Manufacturers desiring approval shall submit catalog cuts that define quality of product and ability to perform as specified. It is understood that no two manufactures use identical methods or make identical products. Any and all deviations from that specified shall be clearly noted.

3. Submittals shall arrive at Engineer at least ten (10) days prior to bid opening. All approvals will be listed in last addendum as being approved to bid. Items substituted, but not listed in contract documents, will not be considered if submitted on shop drawings.

4. Approval of substitute equipment is on basis of quality only. Materials supplier shall be responsible for his quotation reflecting proper selection of his particular equipment with regard to proper capacities, physical dimensions, requirements, intended function, finish, color, etc. Engineer will not give approval to specific model numbers or check capacities, dimensions, or requirements. Evaluation will be on basis of quality and equality to specified items.

5. Prior approval shall be obtained from engineer and no other entity (architect, owner, etc.) is authorized to give such approval.

D. SAMPLES

1. Where, in Engineer's opinion, product sample is required in order to determine appearance, quality, workmanship or operation, Contractor shall submit actual production samples of item in question.

2. Samples will be returned to Contractor. Approved samples may be used.

3. All costs incurred in providing and returning samples will be Contractor's responsibility.

2.03 PRODUCT AND SYSTEM SUBMITTALS

A. Submittals will be required for each piece of equipment, material or product as noted in the table below. All submittal shall be submitted, reviewed and all discrepancies addressed prior to ordering equipment or starting work. Any equipment ordered without having first completed the submittal process is done at the risk of the contractor. Any work performed prior to completing the submittal process is done at the risk of the contractor.

B. SUBMITTAL DEFINITIONS

1. Product Data: Provide manufacturers cut sheets that include general product information including but not limited to: Model Number, physical data, nominal capacities, rough-in requirements.

2. Performance Data: Provide detailed performance and capacities based on project specific requirements including but not limited to: voltage, phase, amperage, overcurrent protection, conductor size, conductor material, conduit size, color temperature, color rendering index, life expectance, efficacy, efficiency, IP ratings, light distribution types and lighting control.

3. Shop Drawings: Provide detailed drawings of the equipment showing overall dimensions, location of electrical connection, location of anchorage points, location of electrical and control panels, and all operating, service and maintenance clearances.

4. Delegated Design: Provide detailed drawings prepared and stamped by a registered Professional Engineer that detail pertinent design criterial, the materials and products to be installed and the required installation locations.

5. Wiring Diagram: Provide diagrams that identify and detail required field wiring.

6. Color Chart: Provide a physical color chart of material samples required for selection of equipment colors.

7. Sustainability Compliance: Provide literature that indicated a products compliance with LEED or Green Globes. See Division 01 for additional information and requirements.

C. SUBMITTAL FORMATS

1. Include the following information with each submittal:

   a. Project Name
   b. Submittal Date
   c. Name of Engineer
   d. Name of General Contractor or Construction Manager
   e. Name of Sub-Contractor
   f. Name of firm or entity that prepared the submittal
   g. Unique Submittal Number
   h. Type of Submittal
   i. Specification Section
   j. Name or Mark of equipment or material and detail or drawings reference.

2. All Submittal with the exception of color charts or material samples shall be electronically transmitted PDFs. All submittals over 8 Mb shall be setup on a share file site and access granted through email with folder's link for download.

D. SUBMITTAL REQUIREMENTS

1. Submittals shall be submitted as a complete specification section. The submittal must include all materials and equipment for that specification section. Submittals for individual materials of equipment will be rejected without review.

2. Submittals shall be complete, clearly show item used, size, dimensions, capacity, rough in, etc., as required for complete check and installation. Manufacturer's literature showing more than one item shall be clearly marked as to which item is being furnished or it will be rejected and returned without review.

3. Each submittal shall be thoroughly checked by the Contractor for compliance with the Contract Document requirements, accuracy of dimensions, relationship to the work of other trades, and conformance with sound, safe practices as to erection and installation. Each submittal shall then bear a stamp evidencing such checking and shall show corrections made, if any. Submittals requiring extensive corrections shall be revised before submission. Each submittal not stamped and signed by the General and Electrical Contractors evidencing such checking will be rejected and returned without review.

4. On each submittal, clearly indicate deviations from requirements in the Contract Documents, including minor variations and limitations; include relevant additional information and revisions, other than those requested on previous submittals. Indicate by highlighting on each submittal or noting on attached separate sheet.

5. Review of the shop drawings and literature by the engineer shall not relieve the contractor for responsibility for deviations for the drawings or specifications, nor shall it relieve the contractor from responsibility for errors in the shop drawings or literature. It is the responsibility of the contractor to provide materials and equipment which meet the specifications and job requirements.

6. Luminaires submittals shall include dimensions, quality, distribution, color rendering index, color temperature, optics, photometrics, all listings (UL, DLC, Energy Star, Made in America, etc.), IP ratings, voltage, wattage, warranty, installation methods, control methods, efficacy, efficiency, diffuser options, emergency operation and any required accessories. Provide IES and Revit files upon request.

E. ENGINEER'S REVIEW - Submittal review is for general design and arrangement only and does not relieve Contractor from any requirements of contract documents. Submittals will not be checked for quantity, dimension, fit or proper technical design of manufactured equipment. Where product or system performance deviations have not been specifically noted in submittal by Contractor, Engineer's review will not relieve Contractor's responsibility to provide complete and satisfactory working installation of equal quality and performance to specified system. Ordering, manufacture, shipment or installation of equipment prior to receipt of Engineer's written review is strictly at Contractor's risk and all costs associated with shipping, changes, replacement or restocking shall be Contractor's responsibility.

2.04 SUB-CONTRACTORS

A. With shop drawing submittals, Contractor shall submit list of all sub-contractors to be used for the project.

2.05 OPERATION AND MAINTENANCE MANUALS

A. Operation and Maintenance Manuals (O&M Manuals) shall contain:

1. Names and contact information for the Project Engineer.

2. Names and contact information for the General Contractor or Construction Manager.

3. Names and contact information for sub-contractors.

4. Installation, maintenance and operating instructions for each piece of equipment.

5. Parts lists

6. Wiring Diagrams

7. Equipment Start-up and inspection certificates

8. Test and Balance Reports

9. Commissioning Reports

10. Copies of Equipment Warranties

11. Copies of Submittals

12. Record Drawings.

13. Training DVD's.

B. Prior to substantial completion submit an electronic copy of the O&M manual in PDF format to the Engineer and Owner for Review and approval. The PDF shall be one file with an index and hyperlinks to each section. Individual bound PDFs without automated navigation will be rejected. All O&M data shall be grouped by the equipment type and ordered by the specification numbering.

C. Prior to final payment a final electronic copy of the O&M manual on an archival quality DVD as well as two printed copies shall be furnished to the owner. Printed copies shall have commercial quality 8-1/2" x 11" 3-ring binders with tabbed dividers for each section.

PART 3 EXECUTION

3.01 SITE EXAMINATION

A. Prior to submitting bid, Contractor shall visit site of proposed work and familiarize himself with conditions affecting work. Allowance shall be made in

bid for these conditions and no additional allowance shall be granted because of lack of knowledge of such conditions.

B. Contractor shall verify all measurements at building site.

3.02 CUTTING AND PATCHING

A. Obtain written permission of Engineer before cutting or piercing structural members.

B. Sleeves through floors and walls shall be black iron pipe, flush with walls, ceilings or finished floors, sized to accommodate raceway. Grout all penetrations through concrete walls or floors. Holes through existing concrete and concrete block (CMU) shall be core drilled.

3.03 CLEAN-UP AND COMMISSIONING

A. DURING CONSTRUCTION - Throughout construction, keep work area reasonably neat and orderly by periodic clean-ups.

B. COMMISSIONING - As independent parts of construction are completed, they may be commissioned and utilized during construction. See various sections for restrictions.

C. AT COMPLETION OF WORK

1. Clean equipment of dirt and debris, including interior of panels, outlet boxes, etc. Remove labels from and clean all fixture lenses.

2. Remove materials, scraps, etc., relative to this work and leave premises in clean and orderly condition. This includes all tunnels, attics, ceiling and crawl spaces.

3. Remove all temporary facilities and restore to conditions present prior to work.

3.04 PROJECT COMPLETION AND DEMONSTRATION

A. TESTING

1. Prior to final test, all switches, panelboards, devices, and fixtures shall be in place.

2. At completion of work, or upon request from Engineer, place entire electrical installation, and/or any portion thereof, in operation to demonstrate satisfactory operation.

3. All electrical systems shall be free from short circuits and unintentional grounds.

4. Furnish one (1) copy of certified test results to Engineer prior to final inspection and include one (1) copy in each Brochure of Equipment.

B. ADJUSTMENTS

1. Make all changes necessary to balance connected electrical loads on complete system. Arrange for balanced conditions of circuits under connected load demands, as contemplated by normal working conditions. Final load and balance test shall be demonstrated in presence of Engineer.

2. Immediately correct all deficiencies which are evidenced during tests and repeat tests until system is approved. Do not cover or conceal electrical installations until satisfactory tests are made and approved.

C. FINAL WALK-THRU

1. Conduct operating tests during final inspection. Demonstrate installation to operate satisfactorily in accordance with requirements of Contract Documents. Should any portion of installation fail to meet requirements of Contract Documents, repair or replace items failing to meet requirements until items can be demonstrated to comply.

2. Have instruments available for measuring light intensities, voltage and current values and for demonstration of continuity, grounds, or open circuit conditions.

3. Furnish personnel to assist in taking measurements and making tests. In event that systems are not complete and fully operational at time of final inspection, all costs of any subsequent inspections shall be borne by Contractor at no additional cost to Owner.

3.05 OWNER ORIENTATION AND TRAINING

A. GENERAL

1. The system training is intended to familiarize the Owner's operating and maintenance staff with all systems requiring maintenance. Training is to be provided after the systems are in place and operational, after issues noted during commissioning have been resolved, and before final acceptance.

2. Provide second set of training sessions for automatic control systems about 6-9 months after the first sessions.

3. All Training shall be videotaped and reproduced on DVD's and given to the owner. Provide a copy for each O&M manual produced.

4. See Individual specification sections for additional training requirements.

B. ATTENDANCE

1. Training is to be provided by contractor's representatives that are familiar with the system's operation and maintenance requirements. Individual training sessions (modules) are to provided for each type or group of systems, separated roughly by trade group that will be performing maintenance on the system.

C. SCHEDULE

1. Duplicate training sessions are to be provided for each training module, so that Owner's operating personnel can be split into two groups during training. Duplicate training sessions to be scheduled on different days. Length of training sessions will be determined by scope of training indicated below, and as coordinated with Owner after draft copy of training documents have been reviewed.

D. TRAINING DOCUMENTATION

1. Contractor to submit draft copy of agenda and training documents to Owner for review at least two weeks prior to training date.

2. Provide a copy of the following items for each person that will be attending the training sessions. Coordinate required number with the Owner.

   a. Training agenda.
   b. Summary of new systems and existing systems affected by this project.
   c. Summary of work performed under this project.

d. Control system drawings and sequences of operation.
e. List of important maintenance and trouble-shooting operations for all systems.

3. Provide minimum of 2 copies of following items:

a. Contract documents including all drawings, specifications, addendums, and change orders.

E. TRAINING SESSIONS

1. Assemble at location to be determined by the Owner.

2. Distribute training documentation as indicated above.

3. Provide classroom style training if required for orientation, discussion of new systems and existing systems affected by this project, and other issues appropriate for a classroom format.

4. Visit site and review locations, and perform detailed review of operation and maintenance requirements for current systems.

5. All training session shall be video recorded and distributed to the owner upon completion in DVD format, or owner desired format. Include all training videos in the O&M manual.

END OF SECTION 26 00 10

(This page intentionally left blank)

PART 1 GENERAL

1.01 WORK INCLUDED

A. This section covers the general provisions and basic materials and methods necessary for electrical work on this project, complete. The materials and methods covered in this section include:

1. Equipment Cleanup.
2. Cutting and Patching.
3. Supports and Concrete Platforms, Foundations, and Pits.
4. Electrical Equipment Coordination, Installation, and Provisions.
5. Excavation, Trenching, and Backfilling.
6. Connections to Special Equipment.
7. Local Operator Stations.
8. Common Electrical Installation Requirements.

1.02 GENERAL

A. Also see the GENERAL CONDITIONS, Division 01 00 00, GENERAL REQUIREMENTS, and Section 26 00 10, GENERAL ELECTRICAL REQUIREMENTS which contain information and requirements that apply to the work specified herein and are mandatory for this project.

B. Like items of equipment or materials provided hereunder shall be the end products of one manufacturer to achieve standardization for appearance, maintenance, and replacement, and shall include all necessary appurtenances for a complete and working system. The equipment or materials shall be the product of a manufacturer regularly engaged in the production of equipment or materials for the specified use. The manufacturer shall have the sole responsibility for the proper functioning and coordination of the equipment or materials as furnished.

C. The Contractor or their sub-contractors shall provide all required miscellaneous equipment and materials, as shown on the Drawings and in accordance with these Specifications. The Contractor or their sub-contractors shall furnish all equipment and material items, whether specified or not, as necessary to provide a complete, operable electrical system.

1.03 SUBMITTALS

A. Submittals shall be provided as specified in Section 01 33 00, SUBMITTALS and Section 26 00 10, GENERAL ELECTRICAL REQUIREMENTS.

1.04 QUALITY ASSURANCE

A. All materials and equipment shall be new and of high quality, of the type best suited for the purpose intended, and be made by nationally recognized and substantially established manufacturers. The type and weight of material used for each purpose shall be as herein specified, and all material shall conform with the requirements of the latest standard specifications of the "ASTM" for that particular material.

PART 2 PRODUCTS

2.01 SUPPORTS AND CONCRETE PLATFORMS, FOUNDATIONS, AND PITS

A. Unless otherwise specified or indicated, all floor mounted equipment (such as motor control centers) shall be anchored to two 4-inch by 2-inch minimum channel iron sills, by tack welding or bolting. Sills shall be furnished by the electrical sub-contractor to match the equipment provided and shall be installed so that equipment is 4 inches above floor level.

B. Where a membrane waterproofed floor or concrete slab is under the equipment, there shall be provided a 4-inch high concrete platform poured separately on top of finished floor slab. This platform shall not extend more than 2 inches in all directions beyond the maximum dimensions of the equipment. The 4-inch channel sills specified above shall be furnished and installed in this platform.

C. In addition to the above, the Contractor or the electrical sub-contractor shall provide all foundations and pits required for installation of work specified herein.

D. All concrete work shall be as specified in Section 03 30 00, CONCRETE.

2.02 LOCAL OPERATOR STATIONS

A. Wherever indicated in the Drawings or by other sections of this Project Manual, furnish and install local operator stations (LOSs) including installation hardware and all wiring. For Division 43 00 00, PROCESS GAS AND LIQUID HANDLING EQUIPMENT and Division 46 00 00, WATER AND WASTEWATER EQUIPMENT supplied LOSs, these shall be installed by the electrical sub-contractor including hardware mounting and all wiring. Specifically, refer to the P&ID Drawings for more detail on LOS provisions.

PART 3 EXECUTION

3.01 ELECTRICAL EQUIPMENT COORDINATION, INSTALLATION, AND PROVISIONS

A. Coordinate the arrangement, mounting, and support of electrical equipment:

1. To allow maximum possible headroom unless specific mounting heights that reduce headroom are indicated.

2. To provide for ease of disconnecting the equipment with minimum interference to other installations.

3. To allow right of way for piping and conduit installed at required slopes.

4. So connecting raceways, cables, wireways, cable trays, and busways will be clear of obstructions and of the working and access space of other equipment.

B. Wherever electrical switch gear, troughs, panelboards, etc., are indicated to be mounted on wall surfaces, the equipment shall be anchored to walls by means of toggle or expansion anchors of sufficient size to support the equipment. Equipment shall be attached to plywood by means of wood screws.

C. Wherever indicated by the Drawings or by other sections of this Project Manual, furnish and install wiring troughs to facilitate connections to electrical equipment. Troughs shall be constructed of code gauge metal, prime coated inside and out and with a gray enamel finish coat. Covers shall be screw attachment type. Troughs shall be installed wherever two or more safety switches or motor starters occur at one location, fed from a common set of conductors, to allow tap connections to be made outside of the switch or starter cover.

3.02 CONNECTIONS TO SPECIAL EQUIPMENT

A. Special equipment is hereby defined as all equipment that is not specified under Division 26 00 00, ELECTRICAL of this contract, but requires connections by the electrical sub-contractor, as indicated on the Drawings. Such connections shall be performed by the electrical sub-contractor. The electrical sub-contractor shall verify the locations of such connections by securing from the Contractor and equipment suppliers' items such as templates, detail drawings, and roughing-in measurements.

B. Unless otherwise specified, the Contractor or sub-contractor responsible for furnishing such equipment is also responsible for setting the equipment in place.

C. All equipment included in Division 26 00 00, ELECTRICAL requiring connections by the Contractor or other sub-contractors shall be provided with proper openings, tapings, flanges, etc., ready for final connection.

3.03 EQUIPMENT CLEANUP

A. Special care must be taken for the protection of panels, switches, starters, and other similar electrical items. All must be kept completely protected from weather elements, painting, dust and dirt, etc., until the facilities are substantially completed. Damage from rust, paint, scratches, etc., shall be corrected as directed by the Engineer.

B. Clean all switchgear, motor controls, etc., and take special care to remove dirt, mortar, wire scraps, etc., from junction boxes and switchgear interiors.

C. Clean light fixtures and lamps thoroughly, just prior to final inspection. Fixture globes, enclosures, shielding, etc., shall be cleaned by an approved method.

D. Accessible elements of disconnecting and protective devices of equipment, coils of dry type transformers and the like shall be cleaned with compressed air (less than 15 psig) and the enclosures shall be vacuum cleaned prior to being energized.

E. Protection of electrical equipment during painting of the facilities shall be the responsibility of the Contractor or their painting sub-contractor. This shall not relieve the electrical sub-contractor of the responsibility for checking to assure that adequate protection is being provided.

3.04 CUTTING AND PATCHING

A. The Contractor will be required under their contract to leave all chases and openings in walls, floors, ceilings, partitions, etc., where shown on the Drawings or otherwise necessary to receive electrical work, but the electrical sub-contractor shall furnish the Contractor full information as to locations, dimensions, etc., of such chases and openings, including provision and proper setting of sleeves and other equipment in such time as to cause no delay to the work of the Contractor.

B. Should any cutting of walls, floors, ceilings, partitions, etc., be required for proper installation of the work or apparatus of the electrical sub-contractor, or be made necessary on account of their failure to give the Contractor

proper information at the time required, such cutting shall be done at the electrical sub-contractor's own expense, restoring the work to its original condition.

C. All cutting and patching done by the electrical sub-contractor shall be subject to the direction and approval of the Engineer. This sub-contractor shall not endanger the stability of the structure by cutting, digging, or otherwise, and shall not be at any time cut or alter work of the Contractor or any other sub-contractor without the Engineer's consent.

3.05 EXCAVATION, TRENCHING, AND BACKFILLING

A. The Division 26 00 00, ELECTRICAL sub-contractor shall perform all excavation required for underground power not installed by the applicable Power Company. Trenches shall be a minimum of 24 inches deep for power and other electrical lines, or as specified in other Sections, or as shown on the Drawings.

B. Excavating, trenching, and backfilling shall be provided in accordance with Section 31 23 00, EARTHWORK FOR STRUCTURES and Section 31 23 33, TRENCH EXCAVATION AND BACKFILL FOR PIPELINES AND APPURTENANT STRUCTURES. Backfill material 4 inches below and above buried conduit shall be sand material.

3.06 COMMON REQUIREMENTS FOR ELECTRICAL INSTALLATION

A. Comply with National Electrical Contractors Association (NECA) 1, Good Workmanship in Electrical Construction and the ANSI National Electrical Installation Standards.

B. Unless shown otherwise on the Drawings, measure indicated mounting heights to bottom of unit for suspended items and to center of unit for wall mounted items.

C. Headroom Maintenance: If mounting heights or other location criteria are not indicated on the Drawings, arrange and install components and equipment to provide maximum possible headroom consistent with these requirements.

D. Equipment: Install to facilitate service, maintenance, and repair or replacement of components of both electrical equipment and other nearby installations. Connect in such a way as to facilitate future disconnecting with minimum interference with other items in the vicinity.

E. Right of Way: Give right-of-way to piping systems installed at a required slope.

END OF SECTION 26 00 50

PART 1 GENERAL

1.01 SUMMARY

A. Section Includes:

1. Copper building wire rated 600 V or less.

2. Metal-clad cable, Type MC, rated 600 V or less.

3. Connectors, splices, and terminations rated 600 V and less.

4. VFD cables

B. Related Requirements:

1. Drawings and general provisions of the Contract, including General and Supplementary Conditions and Division 01 00 00 Specification Sections, apply to this Section.

1.02 ACTION SUBMITTALS

A. Product Data: For each type of product.

PART 2 PRODUCTS

2.01 COPPER BUILDING WIRE

A. Description: Flexible, insulated and uninsulated, drawn copper current-carrying conductor with an overall insulation layer or jacket, or both, rated 600 V or less.

B. Manufacturers: Subject to compliance with requirements, available manufacturers offering products that may be incorporated into the Work include, but are not limited to, the following:

1. Alcan Products Corporation; Alcan Cable Division.

2. Alpha Wire Company.

3. Belden Inc.

4. Cerro Wire LLC.

5. Encore Wire Corporation.

6. General Cable Technologies Corporation.

7. Okonite Company.

8. Service Wire Co.

9. Southwire Incorporated.

10. WESCO

C. Standards:

1. Listed and labeled as defined in NFPA 70, by a qualified testing agency, and marked for intended location and use.

2. RoHS compliant.

3. Conductor and Cable Marking: Comply with wire and cable marking according to UL's "Wire and Cable Marking and Application Guide."

D. Conductors: Copper, complying with ASTM B 3 for bare annealed copper and with ASTM B 8 for stranded conductors.

E. Conductor Insulation:

1. Type USE-2 and Type SE: Comply with UL 854.

2. Type THHN and Type THWN-2: Comply with UL 83.

3. Type THW-2: Comply with NEMA WC-70/ICEA S-95-658 and UL 83.

4. Type XHHW-2: Comply with UL 44.

2.02 METAL-CLAD CABLE, TYPE MC

A. Description: A factory assembly of one or more current-carrying insulated conductors in an overall metallic sheath.

B. Approved for lighting whips 6’ or less only.

C. Manufacturers: Subject to compliance with requirements, available manufacturers offering products that may be incorporated into the Work include, but are not limited to, the following:

1. AFC Cable Systems.

2. Alpha Wire Company.

3. Belden Inc.

4. Encore Wire Corporation.

5. General Cable Technologies Corporation.

6. Okonite Conpany.

7. Service Wire Co.

8. Southwire Incorporated.

9. WESCO

D. Standards:

1. Listed and labeled as defined in NFPA 70, by a qualified testing agency, and marked for intended location and use.

2. Comply with UL 1569.

E. Conductor and Cable Marking: Comply with wire and cable marking according to UL's "Wire and Cable Marking and Application Guide."

F. Conductors: Copper, complying with ASTM B 3 for bare annealed copper and with ASTM B 8 for stranded conductors.

G. Ground Conductor: Insulated.

H. Conductor Insulation:

1. Type TFN/THHN/THWN-2: Comply with UL 83.

I. Armor: Steel, interlocked.

J. Jacket: PVC applied over armor for mechanical connection or wet/damp environments

2.03 VARIABLE FREQUENCY CONTROLLER OUTPUT POWER CABLES

A. 1000V UL Flexible Motor Supply Cable

B. 3 conductors with one full conductor insulated ground (12AWG to 2AWG) or 3 symmetrical bare copper grounds (1AWG to 4/0AWG). If VFC output power cables are installed in parallel in the same raceway, auxiliary gutter, or cable tray, a single equipment grounding conductor that is sized in accordance with Table 250.122 of the NEC, shall be required in combination

with the equipment grounding conductors provided in the VFC output power cable and all be connected together.

C. UL direct burial, Type XHHW-2, RHW-2 rated circuit conductors, PVC jacketed, shielded Type TC cable with XLPE insulation, 90 degree Celsius, Wet/Dry.

2.04 CONNECTORS AND SPLICES

A. Description: Factory-fabricated connectors, splices, and lugs of size, ampacity rating, material, type, and class for application and service indicated; listed and labeled as defined in NFPA 70, by a qualified testing agency, and marked for intended location and use.

B. Manufacturers: Subject to compliance with requirements, available manufacturers offering products that may be incorporated into the Work include, but are not limited to, the following:

1. 3M Electrical Products
2. AFC Cable Systems, Inc.
3. Gardner Bender.
4. Hubbell Power Systems, Inc.
5. Ideal Industries, Inc.
6. Ilsco; a branch of Bardes Corporation.
7. NSi Industries LLC.
8. O-Z/Gedney; a brand of the EGS Electrical Group.
9. Service Wire Co.
10. TE Connectivity Ltd.
11. Thomas and Betts Corp

PART 3 EXECUTION

3.01 CONDUCTOR MATERIAL APPLICATIONS

A. Feeders and Branch Circuits: Copper; solid for No. 10 AWG and smaller; stranded for No. 8 AWG and larger.

3.02 CONDUCTOR INSULATION AND MULTICONDUCTOR CABLE APPLICATIONS AND WIRING METHODS

A. Service Entrance: Type THHN/THWN-2, single conductors in raceway. Type SE or Type USE, multi-conductor cable.

B. Feeders: Type THHN/THWN-2, single conductors in raceway. Metal-clad cable, Type MC. Nonmetallic-sheathed cable, Type NM.

C. Branch Circuits: Type THHN/THWN-2, single conductors in raceway. Metal-clad cable, Type MC. Nonmetallic-sheathed cable, Type NM.

D. Cord Drops and Portable Appliance Connections: Type SO, hard service cord with stainless-steel, wire-mesh, strain relief device at terminations to suit application.

3.03 INSTALLATION OF CONDUCTORS AND CABLES

A. Conceal cables in finished walls, ceilings, and floors unless otherwise indicated.

B. Complete raceway installation between conductor and cable termination points according to Section 26 05 33 "Raceways and Boxes for Electrical Systems" prior to pulling conductors and cables.

C. Use manufacturer-approved pulling compound or lubricant where necessary; compound used must not deteriorate conductor or insulation. Do not exceed manufacturer's recommended maximum pulling tensions and sidewall pressure values.

D. Use pulling means, including fish tape, cable, rope, and basket-weave wire/cable grips, that will not damage cables or raceway.

E. Install exposed cables parallel and perpendicular to surfaces of exposed structural members, and follow surface contours where possible.

F. Support cables according to Section 26 05 29 "Hangers and Supports for Electrical Systems."

G. Provide a dedicated neutral conductor for each 120 V branch circuit.

3.04 CONNECTIONS

A. Tighten electrical connectors and terminals according to manufacturer's published torque-tightening values. If manufacturer's torque values are not indicated, use those specified in UL 486A-486B.

B. Make splices, terminations, and taps that are compatible with conductor material and that possess equivalent or better mechanical strength and insulation ratings than unspliced conductors.

C. Wiring at Outlets: Install conductor at each outlet, with at least 6 inches (150 mm) of slack.

3.05 IDENTIFICATION

A. Identify and color-code conductors and cables according to Section 26 05 53 "Identification for Electrical Systems."

B. Identify each spare conductor at each end with identity number and location of other end of conductor, and identify as spare conductor.

3.06 SLEEVE AND SLEEVE-SEAL INSTALLATION FOR ELECTRICAL PENETRATIONS

A. Install sleeves and sleeve seals at penetrations of exterior floor and wall assemblies. Comply with requirements in Section 26 05 44 "Sleeves and Sleeve Seals for Electrical Raceways and Cabling."

3.07 FIRESTOPPING

A. Apply firestopping to electrical penetrations of fire-rated floor and wall assemblies to restore original fire-resistance rating of assembly.

END OF SECTION 26 05 19

PART 1 GENERAL

1.01 RELATED DOCUMENTS

A. Drawings and general provisions of the Contract, including General and Supplementary Conditions and Division 01 00 00 Specification Sections, apply to this Section.

1.02 SUMMARY

A. RATIONALE – Grounding provides the foundation to the entire electrical system. This system is designed to:

B. Protect personnel.

C. Minimize damage to equipment and property in the event of high fault current situations,

D. Improve overall electrical system reliability, and

E. Minimize the effects of transient overvoltages.

F. Section includes grounding and bonding systems and equipment.

G. Section includes grounding and bonding systems and equipment, plus the following special applications:

1. Underground distribution grounding.

2. Foundation steel electrodes.

1.03 ACTION SUBMITTALS

A. Product Data: For each type of product.

1.04 INFORMATIONAL SUBMITTALS

A. Coordination Drawings: Plans showing dimensioned as-built locations of grounding features specified in "Field Quality Control" Article.

1. Ground rods

2. Concrete encased electrodes

B. Qualification Data: For testing agency and testing agency's field supervisor.

C. Field quality-control reports.

D. Photographs of ground rod installation prior to burial.

E. Photographs of Cadweld connections to rebar and building steel.

F. Photographs of connection to water service and all bonding jumpers.

G. Certified test results from ground resistance measurements.

1.05 CLOSEOUT SUBMITTALS

A. Operation and maintenance data.

1. Plans showing as-built, dimensioned locations of grounding features specified in "Field Quality Control" Article, including the following:

a. Ground rods.
b. Concrete encased electrodes

PART 2 PRODUCTS

2.01 SYSTEM DESCRIPTION

A. Electrical Components, Devices, and Accessories: Listed and labeled as defined in NFPA 70, by a qualified testing agency, and marked for intended location and application.

B. Comply with UL 467 for grounding and bonding materials and equipment.

2.02 CONDUCTORS

A. Insulated Conductors: Copper wire or cable insulated for 600 V unless otherwise required by applicable Code or authorities having jurisdiction.

B. Equipment and wiring device grounding conductor shall be as follows:

1. Bare copper or have green insulation of same type as circuit conductors (larger wires may be permanently marked with green).

2. Properly sized in accordance with the NEC.

C. Bare Copper Conductors:

1. Solid Conductors: ASTM B 3.

2. Stranded Conductors: ASTM B 8.

3. Tinned Conductors: ASTM B 33.

4. Bonding Cable: 28 kcmil, 14 strands of No. 17 AWG conductor, 1/4 inch (6 mm) in diameter.

5. Bonding Conductor: No. 4 or No. 6 AWG, stranded conductor.

6. Bonding Jumper: Copper tape, braided conductors terminated with copper ferrules; 1-5/8 inches (41 mm) wide and 1/16 inch (1.6 mm) thick.

7. Tinned Bonding Jumper: Tinned-copper tape, braided conductors terminated with copper ferrules; 1-5/8 inches (41 mm) wide and 1/16 inch (1.6 mm) thick.

D. Grounding Bus: Predrilled rectangular bars of annealed copper, 1/4 by 4 inches (6.3 by 100 mm) in cross section, with 9/32-inch (7.14-mm) holes spaced 1-1/8 inches (28 mm) apart. Stand-off insulators for mounting shall comply with UL 891 for use in switchboards, 600 V and shall be Lexan or PVC, impulse tested at 5000 V.

2.03 CONNECTORS

A. Listed and labeled by an NRTL acceptable to authorities having jurisdiction for applications in which used and for specific types, sizes, and combinations of conductors and other items connected.

B. Bolted Connectors for Conductors and Pipes: Copper or copper alloy, pressure type with at least two bolts.

1. Pipe Connectors: Clamp type, sized for pipe.

C. Welded Connectors: Exothermic-welding kits of types recommended by kit manufacturer for materials being joined and installation conditions.

D. Bus-Bar Connectors: Mechanical type, cast silicon bronze, solderless compression-type wire terminals, and long-barrel, two-bolt connection to ground bus bar.

E. Beam Clamps: Mechanical type, terminal, ground wire access from four directions, with dual, tin-plated or silicon bronze bolts.

F. Cable-to-Cable Connectors: Compression type, copper or copper alloy.

G. Cable Tray Ground Clamp: Mechanical type, zinc-plated malleable iron.

H. Conduit Hubs: Mechanical type, terminal with threaded hub.

I. Ground Rod Clamps: Mechanical type, copper or copper alloy, terminal with hex head bolt.

J. Lay-in Lug Connector: Mechanical type, copper rated for direct burial terminal with set screw.

K. Service Post Connectors: Mechanical type, bronze alloy terminal, in short- and long-stud lengths, capable of single and double conductor connections.

L. Signal Reference Grid Clamp: Mechanical type, stamped-steel terminal with hex head screw.

M. Straps: Solid copper, copper lugs. Rated for 600 A.

N. Tower Ground Clamps: Mechanical type, copper or copper alloy, terminal one-piece clamp.

O. U-Bolt Clamps: Mechanical type, copper or copper alloy, terminal listed for direct burial.

P. Water Pipe Clamps:

1. Mechanical type, two pieces with zinc-plated bolts.

a. Material: Die-cast zinc alloy.
b. Listed for direct burial.

2.04 GROUNDING ELECTRODES

A. Ground Rods: Copper-clad steel; 3/4 inch by 10 feet (19 mm by 3 m).

B. Concrete encased electrodes: #5 A36 Rod or larger.

PART 3 EXECUTION

3.01 APPLICATIONS

A. Conductors: Install solid conductor for No. 10 AWG and smaller, and stranded conductors for No. 8 AWG and larger unless otherwise indicated.

B. Underground Grounding Conductors: Install bare tinned-copper conductor, No. 2/0 AWG minimum.

1. Bury at least 24 inches (600 mm) below grade.

C. Grounding Bus: Install in electrical equipment rooms, in rooms housing service equipment, and elsewhere as indicated.

1. Install bus horizontally, on insulated spacers 2 inches (50 mm) minimum from wall, 6 inches (150 mm) above finished floor unless otherwise indicated.

D. Conductor Terminations and Connections:

1. Pipe and Equipment Grounding Conductor Terminations: Bolted connectors.

2. Underground Connections: Welded connectors except at test wells and as otherwise indicated.

3. Connections to Ground Rods at Test Wells: Bolted connectors.

4. Connections to Structural Steel: Welded connectors.

5. Any threaded bolt connectors shall be torqued in accordance with manufacturer's guidelines.

3.02 GROUNDING AT THE SERVICE

A. Equipment grounding conductors and grounding electrode conductors shall be connected to the ground bus. Install a main bonding jumper between the neutral and ground buses.

3.03 GROUNDING UNDERGROUND DISTRIBUTION SYSTEM COMPONENTS

A. Comply with IEEE C2 grounding requirements.

B. Grounding Manholes and Handholes: Install a driven ground rod through manhole or handhole floor, close to wall, and set rod depth so 4 inches (100 mm) will extend above finished floor. If necessary, install ground rod before manhole is placed and provide No. 1/0 AWG bare, tinned-copper conductor from ground rod into manhole through a waterproof sleeve in manhole wall. Protect ground rods passing through concrete floor with a double wrapping of pressure-sensitive insulating tape or heat-shrunk insulating sleeve from 2 inches (50 mm) above to 6 inches (150 mm) below concrete. Seal floor opening with waterproof, nonshrink grout.

C. Grounding Connections to Manhole Components: Bond exposed-metal parts such as inserts, cable racks, pulling irons, ladders, and cable shields within each manhole or handhole, to ground rod or grounding conductor. Make connections with No. 4 AWG minimum, stranded, hard-drawn copper bonding conductor. Train conductors level or plumb around corners and fasten to manhole walls. Connect to cable armor and cable shields according to written instructions by manufacturer of splicing and termination kits.

D. Pad-Mounted Transformers and Switches: Install two ground rods and ground ring around the pad. Ground pad-mounted equipment and noncurrent-carrying metal items associated with substations by connecting them to underground cable and grounding electrodes. Install tinned-copper conductor not less than No. 2 AWG for ground ring and for taps to equipment grounding terminals. Bury ground ring not less than 6 inches (150 mm) from the foundation.

3.04 EQUIPMENT GROUNDING

A. Install insulated equipment grounding conductors with all feeders and branch circuits. Do not rely on conduit for the grounding path.

B. Multiple circuits sharing a raceway may share a single grounding conductor if all of the following requirements are met:

1. All circuits originate in the same panel.

2. No more than three single pole circuits may share a ground conductor.

3. Size the ground conductor for the largest circuit.

C. Install insulated equipment grounding conductors with the following items, in addition to those required by NFPA 70:

1. Feeders and branch circuits.

2. Lighting circuits.

3. Receptacle circuits.

4. Single-phase motor and appliance branch circuits.

5. Three-phase motor and appliance branch circuits.

6. Flexible raceway runs.

7. Armored and metal-clad cable runs.

D. Air-Duct Equipment Circuits: Install insulated equipment grounding conductor to duct-mounted electrical devices operating at 120 V and more, including air cleaners, heaters, dampers, humidifiers, and other duct electrical equipment. Bond conductor to each unit and to air duct and connected metallic piping.

E. Water Heater, Heat-Tracing, and Antifrost Heating Cables: Install a separate insulated equipment grounding conductor to each electric water heater and heat-tracing cable. Bond conductor to heater units, piping, connected equipment, and components.

F. Poles Supporting Outdoor Lighting Fixtures: Do not install a grounding electrode and a separate insulated equipment grounding conductor at these locations. Bond the equipment grounding conductor installed with branch-circuit conductors to the grounding terminal at the pole base.

3.05 INSTALLATION

A. Grounding Conductors: Route along shortest and straightest paths possible unless otherwise indicated or required by Code. Avoid obstructing access or placing conductors where they may be subjected to strain, impact, or damage.

B. Ground Rods: Drive rods until tops are 2 inches (50 mm) below finished floor or final grade unless otherwise indicated.

1. Interconnect ground rods with grounding electrode conductor below grade and as otherwise indicated. Make connections without exposing steel or damaging coating if any.

2. For grounding electrode system, install at least 2 rods spaced at least one-rod length from each other and located at least the same distance from other grounding electrodes, and connect to the service grounding electrode conductor.

C. Bonding Straps and Jumpers: Install in locations accessible for inspection and maintenance except where routed through short lengths of conduit.

1. Bonding to Structure: Bond straps directly to basic structure, taking care not to penetrate any adjacent parts.

2. Bonding to Equipment Mounted on Vibration Isolation Hangers and Supports: Install bonding so vibration is not transmitted to rigidly mounted equipment.

3. Use exothermic-welded connectors for outdoor locations; if a disconnect-type connection is required, use a bolted clamp.

D. Grounding and Bonding for Piping:

1. Metal Water Service Pipe: Install insulated copper grounding conductors, in conduit, from building's main service equipment, or grounding bus, to main metal water service entrances to building.

Connect grounding conductors to main metal water service pipes; use a bolted clamp connector or bolt a lug-type connector to a pipe flange by using one of the lug bolts of the flange. Where a dielectric main water fitting is installed, connect grounding conductor on street side of fitting. Bond metal grounding conductor conduit or sleeve to conductor at each end.

2. Water Meter Piping: Use braided-type bonding jumpers to electrically bypass water meters. Connect to pipe with a bolted connector.

3. Bond each aboveground portion of gas piping system downstream from equipment shutoff valve.

E. Bonding Interior Metal Ducts: Bond metal air ducts to equipment grounding conductors of associated fans, blowers, electric heaters, and air cleaners. Install bonding jumper to bond across flexible duct connections to achieve continuity. Size bonding conductors and jumpers in accordance with NEC 250.122, using the rating of the circuit that is likely to energize the ducts.

F. Ground Ring: Install a grounding conductor, electrically connected to each building structure ground rod and to each indicated item, extending around the perimeter of area or item indicated.

1. Install tinned-copper conductor not less than No. **2/0** AWG for ground ring and for taps to building steel.

2. Bury ground ring not less than 24 inches from building's foundation.

G. Ufer Ground (Concrete-Encased Grounding Electrode): Fabricate according to NFPA 70, and as detailed on drawings. If drawing does not provide Ufer ground detail install the grounding electrode as defined below:

1. Use a minimum of 20 feet (6 m) of bare copper conductor not smaller than No. 4 AWG.

2. If concrete foundation is less than 20 feet (6 m) long, coil excess conductor within base of foundation.

3. Bond grounding conductor to reinforcing steel in at least four locations and to anchor bolts. Extend grounding conductor below grade and connect to building's grounding grid or to grounding electrode external to concrete.

H. Structural Steel: When available, bond structural steel to grounding electrode system, according to NFPA 70.

3.06 FIELD QUALITY CONTROL

A. Perform tests and inspections.

B. Tests and Inspections:

1. After installing grounding system but before permanent electrical circuits have been energized, test for compliance with requirements.

2. Inspect physical and mechanical condition. Verify tightness of accessible, bolted, electrical connections with a calibrated torque wrench according to manufacturer's written instructions.

3. Test completed grounding system at each location where a maximum ground-resistance level is specified, at service disconnect enclosure grounding terminal, and at individual ground rods. Make tests at ground rods before any conductors are connected.

   a. Measure ground resistance no fewer than two full days after last trace of precipitation and without soil being moistened by any means other than natural drainage or seepage and without chemical treatment or other artificial means of reducing natural ground resistance.
   b. Perform tests by fall-of-potential method according to IEEE 81.

4. Prepare dimensioned Drawings locating each test well, ground rod and ground-rod assembly, and other grounding electrodes. Identify each by letter in alphabetical order, and key to the record of tests and observations. Include the number of rods driven and their depth at each location, and include observations of weather and other phenomena that may affect test results. Describe measures taken to improve test results.

C. Grounding system will be considered defective if it does not pass tests and inspections.

D. Prepare test and inspection reports.

E. Report measured ground resistances that exceed 25 ohms to ground.

F. Excessive Ground Resistance: If resistance to ground exceeds specified values, notify Architect promptly and include recommendations to reduce ground resistance.

END OF SECTION 26 05 26

(This page intentionally left blank)

PART 1 GENERAL

1.01 SUMMARY

A. Section Includes:

1. Steel slotted support systems.

2. Conduit and cable support devices.

3. Support for conductors in vertical conduit.

4. Structural steel for fabricated supports and restraints.

5. Mounting, anchoring, and attachment components, including powder-actuated fasteners, mechanical expansion anchors, concrete inserts, clamps, through bolts, toggle bolts, and hanger rods.

6. Fabricated metal equipment support assemblies.

B. Related Requirements:

1. Section 26 05 19 “Low Voltage Electrical Power Conductors and Cables” for products and installation requirements necessary for conductors and cables

2. Section 26 05 48.16 "Seismic Controls for Electrical Systems" for products and installation requirements necessary for compliance with seismic criteria.

1.02 ACTION SUBMITTALS

A. Product Data: For each type of product.

1.03 INFORMATIONAL SUBMITTALS

A. Seismic Qualification Data: Certificates, for hangers and supports for electrical equipment and systems, accessories, and components, from manufacturer.

1.04 COORDINATION

A. Coordinate size and location of concrete bases. Cast anchor-bolt inserts into bases. Concrete, reinforcement, and formwork requirements are specified together with concrete Specifications.

B. Coordinate installation of roof curbs, equipment supports, and roof penetrations.

PART 2 PRODUCTS

2.01 PERFORMANCE REQUIREMENTS

A. Seismic Performance: Hangers and supports shall withstand the effects of earthquake motions determined according to ASCE/SEI 7.

1. The term "withstand" means "the supported equipment and systems will remain in place without separation of any parts when subjected to the seismic forces specified and the supported equipment and systems will be fully operational after the seismic event."

2.02 SUPPORT, ANCHORAGE, AND ATTACHMENT COMPONENTS

A. Steel Slotted Support Systems: Preformed steel channels and angles with minimum 13/32-inch- (10-mm-) diameter holes at a maximum of 8 inches (200 mm) o.c. in at least one surface.

1. Manufacturers: Subject to compliance with requirements, available manufacturers offering products that may be incorporated into the Work include, but are not limited to the following:

a. Allied Tube & Conduit; a part of Atkore International.
b. B-line, an Eaton business.
c. ERICO International Corporation.
d. Flex-Strut Inc.
e. Gripple Inc.
f. G-Strut.
g. Thomas & Betts Corporation; A Member of the ABB Group.
h. Unistrut; Part of Atkore International.

2. Standard: Comply with MFMA-4 factory-fabricated components for field assembly.

3. Material for Channel, Fittings, and Accessories: Galvanized steel.

4. Channel Width: Selected for applicable load criteria.

5. Metallic Coatings: Hot-dip galvanized after fabrication and applied according to MFMA-4.

6. Nonmetallic Coatings: Manufacturer's standard PVC, polyurethane, or polyester coating applied according to MFMA-4.

7. Painted Coatings: Manufacturer's standard painted coating applied according to MFMA-4.

8. Protect finishes on exposed surfaces from damage by applying a strippable, temporary protective covering before shipping.

B. Conduit and Cable Support Devices: Steel hangers, clamps, and associated fittings, designed for types and sizes of raceway or cable to be supported.

C. Support for Conductors in Vertical Conduit: Factory-fabricated assembly consisting of threaded body and insulating wedging plug or plugs for nonarmored electrical conductors or cables in riser conduits. Plugs shall have number, size, and shape of conductor gripping pieces as required to suit individual conductors or cables supported. Body shall be made of malleable iron.

D. Structural Steel for Fabricated Supports and Restraints: ASTM A 36/A 36M steel plates, shapes, and bars; black and galvanized.

E. Mounting, Anchoring, and Attachment Components: Items for fastening electrical items or their supports to building surfaces include the following:

1. Powder-Actuated Fasteners: Threaded-steel stud, for use in hardened portland cement concrete, steel, or wood, with tension, shear, and pullout capacities appropriate for supported loads and building materials where used.

2. Mechanical-Expansion Anchors: Insert-wedge-type, zinc-coated steel, for use in hardened portland cement concrete, with tension, shear, and pullout capacities appropriate for supported loads and building materials where used.

3. Concrete Inserts: Steel or malleable-iron, slotted support system units are similar to MSS Type 18 units and comply with MFMA-4 or MSS SP-58.

4. Clamps for Attachment to Steel Structural Elements: MSS SP-58 units are suitable for attached structural element.

5. Through Bolts: Structural type, hex head, and high strength. Comply with ASTM A 325.

6. Toggle Bolts: All-steel springhead type.

7. Hanger Rods: Threaded steel.

2.03 FABRICATED METAL EQUIPMENT SUPPORT ASSEMBLIES

A. Description: Welded or bolted structural-steel shapes, shop or field fabricated to fit dimensions of supported equipment.

PART 3 EXECUTION

3.01 APPLICATION

A. Comply with the following standards for application and installation requirements of hangers and supports, except where requirements on Drawings or in this Section are stricter:

1. NECA 1.

2. NECA 101

3. NECA 105.

4. NECA 111.

B. Comply with requirements for firestopping materials and installation for penetrations through fire-rated walls, ceilings, and assemblies.

C. Comply with requirements for raceways and boxes specified in Section 260533 "Raceways and Boxes for Electrical Systems."

D. Maximum Support Spacing and Minimum Hanger Rod Size for Raceways: Space supports for EMT, IMC, and RMC as required by NFPA 70. Minimum rod size shall be 1/4 inch (6 mm) in diameter.

E. Multiple Raceways or Cables: Install trapeze-type supports fabricated with steel slotted support system, sized so capacity can be increased by at least 25 percent in future without exceeding specified design load limits.

1. Secure raceways and cables to these supports with two-bolt conduit clamps.

F. Spring-steel clamps designed for supporting single conduits without bolts may be used for 1-1/2-inch (38-mm) and smaller raceways serving branch circuits and communication systems above suspended ceilings, and for fastening raceways to trapeze supports.

3.02 SUPPORT INSTALLATION

A. Comply with NECA 1 and NECA 101 for installation requirements except as specified in this article.

B. Raceway Support Methods: In addition to methods described in NECA 1, EMT, IMC and RMC may be supported by openings through structure members, according to NFPA 70.

C. Strength of Support Assemblies: Where not indicated, select sizes of components so strength will be adequate to carry present and future static loads within specified loading limits. Minimum static design load used for strength determination shall be weight of supported components plus 200 lb (90 kg).

D. Mounting and Anchorage of Surface-Mounted Equipment and Components: Anchor and fasten electrical items and their supports to building structural elements by the following methods unless otherwise indicated by code:

1. To Wood: Fasten with lag screws or through bolts.

2. To New Concrete: Bolt to concrete inserts.

3. To Masonry: Approved toggle-type bolts on hollow masonry units and expansion anchor fasteners on solid masonry units.

4. To Existing Concrete: Expansion anchor fasteners.

5. Instead of expansion anchors, powder-actuated driven threaded studs provided with lock washers and nuts may be used in existing standard-weight concrete 4 inches (100 mm) thick or greater. Do not use for anchorage to lightweight-aggregate concrete or for slabs less than 4 inches (100 mm) thick.

6. To Steel: Beam clamps (MSS SP-58, Type 19, 21, 23, 25, or 27), complying with MSS SP-69.

7. To Light Steel: Sheet metal screws.

8. Items Mounted on Hollow Walls and Nonstructural Building Surfaces: Mount cabinets, panelboards, disconnect switches, control enclosures, pull and junction boxes, transformers, and other devices on slotted-channel racks attached to substrate by means that comply with seismic-restraint strength and anchorage requirements.

E. Drill holes for expansion anchors in concrete at locations and to depths that avoid the need for reinforcing bars.

3.03 INSTALLATION OF FABRICATED METAL SUPPORTS

A. Cut, fit, and place miscellaneous metal supports accurately in location, alignment, and elevation to support and anchor electrical materials and equipment.

B. Field Welding: Comply with AWS D1.1/D1.1M.

3.04 CONCRETE BASES

A. Construct concrete bases of dimensions indicated but not less than 4 inches (100 mm) larger in both directions than supported unit, and so anchors will be a minimum of 10 bolt diameters from edge of the base.

B. Use 3000-psi (20.7-MPa), 28-day compressive-strength concrete.

C. Anchor equipment to concrete base.

1. Place and secure anchorage devices. Use supported equipment manufacturer's setting drawings, templates, diagrams, instructions, and directions furnished with items to be embedded.

2. Install anchor bolts to elevations required for proper attachment to supported equipment.

3. Install anchor bolts according to anchor-bolt manufacturer's written instructions.

END OF SECTION 26 05 29

PART 1 GENERAL

1.01 SUMMARY

A. Section Includes:

1. Metal conduits and fittings.
2. Nonmetallic conduits and fittings.
3. Metal wireways and auxiliary gutters.
4. Nonmetal wireways and auxiliary gutters.
5. Surface raceways.
6. Boxes, enclosures, and cabinets.
7. Handholes and boxes for exterior underground cabling.

1.02 ACTION SUBMITTALS

A. Product Data: For surface raceways, wireways and fittings, floor boxes, hinged-cover enclosures, and cabinets.

1.03 INFORMATIONAL SUBMITTALS

A. Seismic Qualification Data: Certificates, for enclosures, cabinets, and conduit racks and their mounting provisions, including those for internal components, from manufacturer.

PART 2 PRODUCTS

2.01 METAL CONDUITS AND FITTINGS

A. Metal Conduit:

1. Manufacturers: Subject to compliance with requirements, available manufacturers offering products that may be incorporated into the Work include, but are not limited to the following:

a. Allied Tube & Conduit; a part of Atkore International.
b. Electri-Flex Company.
c. O-Z/Gedney; a brand of Emerson Industrial Automation.
d. Patriot Aluminum Products, LLC.
e. Perma-Cote.
f. Picoma Industries, Inc.

g. Plasti-Bond.
h. Republic Conduit.
i. Southwire Company.
j. Thomas & Betts Corporation; A Member of the ABB Group.
k. Western Tube and Conduit Corporation.

2. Listing and Labeling: Metal conduits, tubing, and fittings shall be listed and labeled as defined in NFPA 70, by a qualified testing agency, and marked for intended location and application.

3. GRC: Comply with ANSI C80.1 and UL 6.

4. IMC: Comply with ANSI C80.6 and UL 1242.

5. PVC-Coated Steel Conduit: PVC-coated rigid steel conduit.

a. Comply with NEMA RN 1.
b. Coating Thickness: 0.040 inch, minimum.

6. EMT: Comply with ANSI C80.3 and UL 797.

7. FMC: Comply with UL 1; zinc-coated steel.

8. LFMC: Flexible steel conduit with PVC jacket and complying with UL 360.

B. Metal Fittings: Comply with NEMA FB 1 and UL 514B.

1. Listing and Labeling: Listed and labeled as defined in NFPA 70, by a qualified testing agency, and marked for intended location and application.

2. Fittings, General: Listed and labeled for type of conduit, location, and use.

3. Conduit Fittings for Hazardous (Classified) Locations: Comply with UL 1203 and NFPA 70.

4. Fittings for EMT:

a. Material: Steel.
b. Type: Setscrew.

5. Expansion Fittings: PVC or steel to match conduit type, complying with UL 651, rated for environmental conditions where installed, and including flexible external bonding jumper.

6. Coating for Fittings for PVC-Coated Conduit: Minimum thickness of 0.040 inch, with overlapping sleeves protecting threaded joints.

C. Joint Compound for IMC and GRC: Approved, as defined in NFPA 70, by authorities having jurisdiction for use in conduit assemblies, and compounded for use to lubricate and protect threaded conduit joints from corrosion and to enhance their conductivity.

2.02 NONMETALLIC CONDUITS AND FITTINGS

A. Nonmetallic Conduit:

1. Manufacturers: Subject to compliance with requirements, available manufacturers offering products that may be incorporated into the Work include, but are not limited to the following:

a. Arnco Corporation.
b. CANTEX INC.
c. CertainTeed Corporation.
d. Champion Fiberglass, Inc.
e. Condux International, Inc.
f. Electri-Flex Company.
g. FRE Composites.
h. Kraloy.
i. Lamson & Sessions.
j. Niedax Inc.
k. RACO; Hubbell.
l. Thomas & Betts Corporation; A Member of the ABB Group.

B. Listing and Labeling: Listed and labeled as defined in NFPA 70, by a qualified testing agency, and marked for intended location and application.

1. RNC: Type EPC-40-PVC or Type EPC-80-PVC, complying with NEMA TC 2 and UL 651 unless otherwise indicated.

2. LFNC: Comply with UL 1660.

3. Rigid HDPE, SDR 11: Comply with UL 651A.

4. Continuous HDPE, SDR 11: Comply with UL 651B.

C. Nonmetallic Fittings:

1. Fittings, General: Listed and labeled for type of conduit, location, and use.

2. Fittings for ENT and RNC: Comply with NEMA TC 3; match to conduit or tubing type and material.

3. Fittings for LFNC: Comply with UL 514B.

4. Solvents and Adhesives: As recommended by conduit manufacturer.

2.03 STANDARD CONDUIT SEALS

A. Manufacturers: Subject to compliance with requirements, available manufacturers offering products that may be incorporated into the Work include, but are not limited to the following:

1. American Polywater Corporation

2. Dura-Line, Inc.

3. FS3, Inc.

B. Description: Sealing compound for use in underground conduit to prevent water and gas infiltration in non-classified locations.

1. Semi-permanent, re-enterable seal.

2. Compatible with PVC, rigid steel, EMT, IMC, fiberglass and polyethylene conduits.

3. Keeps water, acids, greases, gases, insects, rodents, etc., out of the conduit.

4. Two-part high-expansion urethane foam with 98% closed cell content.

5. Cured compressive strength of 300 lbs. (ASTM D790), tensile strength of 250 lbs. (ASTM D1623), and flexural strength of 450 lbs. (ASTM D790) and temperature range of -20º to 200ºF.

6. Cured sealant will be capable of holding 10 psi water pressure continuously.

7. Meets NEC requirements for raceway seals per Articles 225.27, 230.8 and 300.5

8. FST™ Sealant or equivalent.

2.04 CLASSIFIED LOCATION CONDUIT SEALS

A. Available Manufacturers: Subject to compliance with requirements, manufacturers offering products that may be incorporated into the Work include, but are not limited to, the following:

1. Appleton Electric

2. Cooper Crouse-Hinds

3. Hubbell Killark

B. Description: Sealing fittings for use between a classified and non-classified location.

1. Explosion proof and dust-ignition proof, raintight construction.

2. Smooth, rounded integral bushing to protect conductor insulation.

3. Tapped and tapered threads for tight, rigid joints and ground continuity.

4. Removable nipple in male sealing fitting that can be used interchangeably in top or bottom hub.

5. Fiber filler to prevent sealing compound from leaking while being poured in its liquid state.

6. Sealing cement which hardens to contain and restrict the passage of gasses and explosions in classified areas.

2.05 METAL WIREWAYS AND AUXILIARY GUTTERS

A. Manufacturers: Subject to compliance with requirements, available manufacturers offering products that may be incorporated into the Work include, but are not limited to the following:

1. B-line, an Eaton business.

2. Hoffman; a brand of Pentair Equipment Protection.

3. MonoSystems, Inc.

B. Description: Sheet metal, complying with UL 870 and NEMA 250, Type 1, Type 3R, Type 4 or Type 12 unless otherwise indicated, and sized according to NFPA 70.

1. Metal wireways installed outdoors shall be listed and labeled as defined in NFPA 70, by a qualified testing agency, and marked for intended location and application.

C. Fittings and Accessories: Include covers, couplings, offsets, elbows, expansion joints, adapters, hold-down straps, end caps, and other fittings to match and mate with wireways as required for complete system.

D. Wireway Covers: Screw-cover type unless otherwise indicated.

E. Finish: Manufacturer's standard enamel finish.

2.06 NONMETALLIC WIREWAYS AND AUXILIARY GUTTERS

A. Manufacturers: Subject to compliance with requirements, available manufacturers offering products that may be incorporated into the Work include, but are not limited to the following:

1. Allied Moulded Products, Inc.

2. Hoffman; a brand of Pentair Equipment Protection.

3. Lamson & Sessions.

B. Listing and Labeling: Nonmetallic wireways and auxiliary gutters shall be listed and labeled as defined in NFPA 70, by a qualified testing agency, and marked for intended location and application.

C. Description: PVC, extruded and fabricated to required size and shape, and having snap-on cover, mechanically coupled connections, and plastic fasteners.

D. Fittings and Accessories: Couplings, offsets, elbows, expansion joints, adapters, hold-down straps, end caps, and other fittings shall match and mate with wireways as required for complete system.

E. Solvents and Adhesives: As recommended by conduit manufacturer.

2.07 SURFACE RACEWAYS

A. Listing and Labeling: Surface raceways and tele-power poles shall be listed and labeled as defined in NFPA 70, by a qualified testing agency, and marked for intended location and application.

B. Surface Metal Raceways: Galvanized steel with snap-on covers complying with UL 5. Manufacturer's standard enamel finish in color selected by Engineer.

1. Manufacturers: Subject to compliance with requirements, available manufacturers offering products that may be incorporated into the Work include, but are not limited to, the following:

a. Mono-Systems, Inc.
b. Panduit Corp.
c. Wiremold / Legrand.

2.08 J-HOOKS

A. Description: Prefabricated sheet metal cable supports for low-voltage cables (lighting controls).

B. Manufacturers: Subject to compliance with requirements, provide products by one of the following:

1. Eaton, B-line.

2. Panduit Corp.

3. Wiremold / Legrand.

C. Listed and labeled as defined in NFPA 70, by an NRTL, and marked for intended location and application.

2.09 BOXES, ENCLOSURES, AND CABINETS

A. Manufacturers: Subject to compliance with requirements, available manufacturers offering products that may be incorporated into the Work include, but are not limited to the following:

1. Crouse-Hinds, an Eaton business.

2. Erickson Electrical Equipment Company.

3. Hoffman; a brand of Pentair Equipment Protection.

4. Hubbell Incorporated.

5. Hubbell Incorporated; Wiring Device-Kellems.

6. Milbank Manufacturing Co.

7. MonoSystems, Inc.

8. Oldcastle Enclosure Solutions.

9. O-Z/Gedney; a brand of Emerson Industrial Automation.

10. RACO; Hubbell.

11. Stahlin Non-Metallic Enclosures.

12. Thomas & Betts Corporation; A Member of the ABB Group.

B. General Requirements for Boxes, Enclosures, and Cabinets: Boxes, enclosures, and cabinets installed in wet locations shall be listed for use in wet locations.

C. Sheet Metal Outlet and Device Boxes: Comply with NEMA OS 1 and UL 514A.

D. Cast-Metal Outlet and Device Boxes: Comply with NEMA FB 1, aluminum, Type FD, with gasketed cover.

E. Nonmetallic Outlet and Device Boxes: Comply with NEMA OS 2 and UL 514C.

F. Metal Floor Boxes. See drawings for differing floor box requirements based on location, floor material and box use.

1. All floor boxes shall be:

   a. Fully adjustable.
   b. Listed and labeled as defined in NFPA 70, by a qualified testing agency, and marked for intended location and application.

2. Specific conditions include:

   a. Concrete floors (3" min. pour depth) - 4-gang floor box with corrosion resistant coating for on-grade use and up to 2" conduit feed.

b. Raised access floors - 4-gang floor box for up to 2" conduit feed.
c. Fire rated poke-through floor box for elevated concrete slabs:

1) Small - 3" diameter core.
2) Large - 8" diameter for up to 2" conduit feed.

d. Flush, round single surface floor box for concrete floors with up to 1" conduit feed.
e. Tombstone pedestal floor box with 1" conduit feed.

3. Include all interior box dividers, flanges, mounting hardware, wiring devices, faceplates, etc. to provide complete floor box outlet in accordance with drawings.

G. Luminaire Outlet Boxes: Nonadjustable, designed for attachment of luminaire weighing 50 lb (23 kg). Outlet boxes designed for attachment of luminaires weighing more than 50 lb (23 kg) shall be listed and marked for the maximum allowable weight.

H. Paddle Fan Outlet Boxes: Nonadjustable, designed for attachment of paddle fan weighing 70 lb (32 kg).

1. Listing and labeling: Paddle fan outlet boxes shall be listed and labeled as defined in NFPA 70, by a qualified testing agency, and marked for intended location and application.

I. Small Sheet Metal Pull and Junction Boxes: NEMA OS 1.

J. Cast-Metal Access, Pull, and Junction Boxes: Comply with NEMA FB 1 and UL 1773, cast aluminum with gasketed cover.

K. Box extensions used to accommodate new building finishes shall be of same material as recessed box.

L. Device Box Dimensions: 4 inches square by 2-1/8 inches deep with single gang mud ring unless device(s) requires otherwise.

M. Gangable boxes are allowed for 6-gang or larger.

N. Hinged-Cover Enclosures: Comply with UL 50 and NEMA 250, Type 1, Type 3R, Type 4 or Type 12 with continuous-hinge cover with flush latch unless otherwise indicated.

1. Metal Enclosures: Steel, finished inside and out with manufacturer's standard enamel.

2. Nonmetallic Enclosures: Plastic.

3. Interior Panels: Steel; all sides finished with manufacturer's standard enamel.

O. Cabinets:

1. NEMA 250, Type 1, Type 3R or Type 12 galvanized-steel box with removable interior panel and removable front, finished inside and out with manufacturer's standard enamel.

2. Hinged door in front cover with flush latch and concealed hinge.

3. Key latch to match panelboards.

4. Metal barriers to separate wiring of different systems and voltage.

5. Accessory feet where required for freestanding equipment.

6. Nonmetallic cabinets shall be listed and labeled as defined in NFPA 70, by a qualified testing agency, and marked for intended location and application.

2.10 HANDHOLES AND BOXES FOR EXTERIOR UNDERGROUND WIRING

A. General Requirements for Handholes and Boxes:

1. Boxes and handholes for use in underground systems shall be designed and identified as defined in NFPA 70, for intended location and application.

2. Boxes installed in wet areas shall be listed and labeled as defined in NFPA 70, by a qualified testing agency, and marked for intended location and application.

B. Polymer-Concrete Handholes and Boxes with Polymer-Concrete Cover: Molded of sand and aggregate, bound together with polymer resin, and reinforced with steel, fiberglass, or a combination of the two.

1. Manufacturers: Subject to compliance with requirements, available manufacturers offering products that may be incorporated into the Work include, but are not limited to the following:

a. Armorcast Products Company.
b. NewBasis.
c. Oldcastle Enclosure Solutions.

d. Oldcastle Precast, Inc.
e. Quazite (Hubbell).

2. Standard: Comply with ANSI/SCTE 77.

3. Load Ratings:

a. Tier 5 for non-traffic areas and sidewalk applications with a safety factor for occasional non-deliberate vehicular traffic.
b. Tier 15 for driveway, parking lot, and off-road applications subject to occasional non-deliberate heavy vehicular traffic.
c. AASHTO H-20 for roadways and other deliberate vehicular traffic applications.

4. Configuration: Designed for flush burial with open bottom unless otherwise indicated.

5. Cover: Weatherproof, secured by tamper-resistant locking devices and having structural load rating consistent with enclosure and handhole location.

6. Cover Finish: Nonskid finish shall have a minimum coefficient of friction of 0.50.

7. Cover Legend: Molded lettering, "ELECTRIC" or “COM” as indicated on drawings.

8. Conduit Entrance Provisions: Conduit-terminating fittings shall mate with entering ducts for secure, fixed installation in enclosure wall.

PART 3 EXECUTION

3.01 RACEWAY APPLICATION

A. Outdoors: Apply raceway products as specified below unless otherwise indicated:

1. Exposed Conduit: GRC.

2. Concealed Conduit, Aboveground: EMT.

3. Underground Conduit: RNC, Type EPC-40-PVC or HDPE in fine bedded trench.

4. Under roadways and paved or concrete walkways: Type EPC-80-PVC or HDPE in fine bedded trench.

5. Connection to Vibrating Equipment (Including Transformers and Hydraulic, Pneumatic, Electric Solenoid, or Motor-Driven Equipment): LFMC.

6. Boxes and Enclosures, Aboveground: NEMA 250, Type 3R.

B. Indoors: Apply raceway products as specified below unless otherwise indicated.

1. Exposed, Not Subject to Physical Damage: EMT.

2. Exposed, Not Subject to Severe Physical Damage: EMT.

3. Exposed and Subject to Severe Physical Damage: GRC. Raceway locations include the following, if applicable:

a. Corridors used for traffic of mechanized carts, forklifts, and pallet-handling units.
b. Mechanical rooms.

4. Concealed in Ceilings and Interior Walls and Partitions: EMT or as specified in Section 260519, “Low-Voltage Electrical Power Conductors and Cables”.

5. Connection to Vibrating Equipment (Including Transformers and Hydraulic, Pneumatic, Electric Solenoid, or Motor-Driven Equipment): FMC, except use LFMC in damp or wet locations.

6. Damp or Wet Locations: GRC.

7. Boxes and Enclosures: NEMA 250, Type 1, except use NEMA 250, Type 4 nonmetallic in institutional and commercial kitchens and damp or wet locations.

8. Concealed in CMU block wall: Type EPC-40-PVC.

C. Minimum Raceway Size: 1 inch trade size for telecom/data and 3/4 inch trade size for all other applications.

D. Raceway Fittings: Compatible with raceways and suitable for use and location.

1. Rigid and Intermediate Steel Conduit: Use threaded rigid steel conduit fittings unless otherwise indicated. Comply with NEMA FB 2.10.

2. PVC Externally Coated, Rigid Steel Conduits: Use only fittings listed for use with this type of conduit. Patch and seal all joints, nicks, and scrapes in PVC coating after installing conduits and fittings. Use sealant recommended by fitting manufacturer and apply in thickness and number of coats recommended by manufacturer.

3. EMT: Use setscrew, steel fittings. Comply with NEMA FB 2.10.

4. Flexible Conduit: Use only fittings listed for use with flexible conduit. Comply with NEMA FB 2.20.

E. Install surface raceways only where specifically indicated on Drawings.

F. Install nonmetallic conduit or tubing for protecting bare grounding conductors.

G. Do not install nonmetallic conduit where ambient temperature exceeds 120 deg F (49 deg C).

3.02 LOW VOLTAGE CABLE INSTALLATION

A. Any low voltage cables in exposed or finished areas shall be in raceway.

B. In accordance with NEC 300.11 and NEC 800.24, any low voltage cables installed in accessible ceilings without conduit, including lighting control cables, shall be as follows:

1. Cables shall not be draped over air ducts, pipes, or conduits, shall not rest on the ceiling grid or tiles, and shall not use ceiling grid support wires or rods.

2. Cables shall be supported using j-hooks at intervals not to exceed 48”. J-hooks shall be attached to the structure with dedicated support wires, and a j-hook shall be installed at each change in cabling direction.

3. Written approval shall be obtained from the IT designer prior to any use of communications system cable/ladder tray or j-hooks. Wherever cable tray or communication system j-hooks are used, the lighting controls cabling shall be bundled with cable ties. Any non-metallic cable ties used to bundle the cables shall be plenum rated.

3.03 INSTALLATION

A. Comply with requirements in Section 26 05 29 "Hangers and Supports for Electrical Systems" for hangers and supports.

B. Comply with NECA 1 and NECA 101 for installation requirements except where requirements on Drawings or in this article are stricter. Comply with NFPA 70 limitations for types of raceways allowed in specific occupancies and number of floors.

C. Do not install raceways or electrical items on any "explosion-relief" walls or rotating equipment.

D. Do not fasten conduits onto the bottom side of a metal deck roof.

E. Keep raceways at least 6 inches away from parallel runs of flues and steam or hot-water pipes. Install horizontal raceway runs above water and steam piping.

F. Whenever routed in parallel, maintain 12” minimum separation between communications conduits and power conduits. Where these conduits must intersect, cross at 90 degrees.

G. Comply with requirements in Section 26 05 29 "Hangers and Supports for Electrical Systems" for hangers and supports.

H. Install no more than the equivalent of three 90-degree bends in any conduit run except for control wiring conduits, for which fewer bends are allowed. Support within 12 inches of changes in direction.

I. Make bends in raceway using large-radius preformed ells. Field bending shall be according to NFPA 70 minimum radii requirements. Use only equipment specifically designed for material and size involved.

J. Conceal conduit and EMT within finished walls, ceilings, and floors unless otherwise indicated. Install conduits parallel or perpendicular to building lines.

K. Support conduit within 12 inches of enclosures to which attached.

L. Raceways Below Slab:

1. Conduits are permitted under the slab in the base material only (not within the concrete slab).

2. All routing must be approved by the structural engineer prior to rough-in.

3. Arrange stub-ups so that curved portions of bends are not visible above finished slab.

4. Change from RNC, Type EPC-40-PVC to PVC Coated GRC bend and thru slab stub before rising above floor.

M. Stub-ups to Above Recessed Ceilings:

1. Use EMT for raceways.

2. Use a conduit bushing or insulated fitting to terminate stub-ups not terminated in hubs or in an enclosure.

N. Threaded Conduit Joints, Exposed to Wet, Damp, Corrosive, or Outdoor Conditions: Apply listed compound to threads of raceway and fittings before making up joints. Follow compound manufacturer's written instructions.

O. Coat field-cut threads on PVC-coated raceway with a corrosion-preventing conductive compound prior to assembly.

P. Raceway Terminations at Locations Subject to Moisture or Vibration: Use insulating bushings to protect conductors including conductors smaller than No. 4 AWG.

Q. Install raceways square to the enclosure and terminate at enclosures with locknuts. Install locknuts hand tight plus 1/4 turn more.

R. Do not rely on locknuts to penetrate nonconductive coatings on enclosures. Remove coatings in the locknut area prior to assembling conduit to enclosure to assure a continuous ground path.

S. Cut conduit perpendicular to the length. For conduits 2-inch trade size and larger, use roll cutter or a guide to make cut straight and perpendicular to the length.

T. Terminate threaded conduits into threaded hubs or with locknuts on inside and outside of boxes or cabinets. Install bushings on conduits up to 1-1/4-inch trade size and insulated throat metal bushings on 1-1/2-inch trade size and larger conduits terminated with locknuts. Install insulated throat metal grounding bushings on service conduits.

U. Install pull wires in empty raceways. Use polypropylene or monofilament plastic line with not less than 200-lb (90-kg) tensile strength. Leave at least 12 inches of slack at each end of pull wire. Cap underground raceways designated as spare above grade alongside raceways in use.

V. Surface Raceways:

1. Install surface raceway with a minimum 2-inch radius control at bend points.

2. Secure surface raceway with screws or other anchor-type devices at intervals not exceeding 48 inches and with no less than two supports per straight raceway section. Support surface raceway according to manufacturer's written instructions. Tape and glue are not acceptable support methods.

W. Install raceway sealing fittings at accessible locations according to NFPA 70 and fill them with listed sealing compound. For concealed raceways, install each fitting in a flush steel box with a blank cover plate having a finish similar to that of adjacent plates or surfaces.

X. Standard Conduit Seals:

1. Install devices to seal raceway interiors at accessible locations. Locate seals so no fittings or boxes are between the seal and the following changes of environments. Seal the interior of all raceways at the following points:

   a. Where conduits pass from warm to cold locations, such as boundaries of refrigerated spaces.
   b. Where an underground service raceway enters a building or structure.
   c. Conduit extending from interior to exterior of building.
   d. Conduit extending into pressurized duct and equipment.
   e. Conduit extending into pressurized zones that are automatically controlled to maintain different pressure set points.
   f. Where otherwise required by NFPA 70.

Y. Expansion-Joint Fittings:

1. Install in each run of aboveground RNC that is located where environmental temperature change may exceed 30 deg F (17 deg C) and that has straight-run length that exceeds 25 feet (7.6 m).

2. Install type and quantity of fittings that accommodate temperature change listed for each of the following locations:

   a. Outdoor Locations Not Exposed to Direct Sunlight: 125 deg F (70 deg C) temperature change.
   b. Outdoor Locations Exposed to Direct Sunlight: 155 deg F (86 deg C) temperature change.

c. Indoor Spaces Connected with Outdoors without Physical Separation: 125 deg F (70 deg C) temperature change.
d. Attics: 135 deg F (75 deg C) temperature change.

3. Install fitting(s) that provide expansion and contraction for at least 0.00041 inch per foot of length of straight run per degree F of temperature change for PVC conduits.

4. Install expansion fittings at all locations where conduits cross building or structure expansion joints.

5. Install each expansion-joint fitting with position, mounting, and piston setting selected according to manufacturer's written instructions for conditions at specific location at time of installation. Install conduit supports to allow for expansion movement.

Z. Flexible Conduit Connections: Comply with NEMA RV 3. Use a maximum of 72 inches of flexible conduit for recessed and semi-recessed luminaires, equipment subject to vibration, noise transmission, or movement; and for transformers and motors.

1. Use LFMC in damp or wet locations subject to severe physical damage.

2. Use LFMC or LFNC in damp or wet locations not subject to severe physical damage.

AA. Mount boxes at heights indicated on Drawings. If mounting heights of boxes are not individually indicated, give priority to ADA requirements. Install boxes with height measured to center of box unless otherwise indicated.

BB. Recessed Boxes in Masonry Walls: Saw-cut opening for box in center of cell of masonry block, and install box flush with surface of wall. Prepare block surfaces to provide a flat surface for a raintight connection between the box and cover plate or the supported equipment and box.

CC. Horizontally separate boxes mounted on opposite sides of walls so they are not in the same vertical channel.

DD. Locate boxes so that cover or plate will not span different building finishes.

EE. Support boxes of three gangs or more from more than one side by spanning two framing members or mounting on brackets specifically designed for the purpose.

FF. Fasten junction and pull boxes to or support from building structure. Do not support boxes by conduits.

GG. Set metal floor boxes level and flush with finished floor surface.

HH. Set nonmetallic floor boxes level. Trim after installation to fit flush with finished floor surface.

3.04 INSTALLATION OF UNDERGROUND CONDUIT

A. Direct-Buried Conduit:

1. Excavation

a. Excavate trenches to indicated depths.
b. Excavate trenches to uniform widths to provide 12 inches on each side of conduits. Excavate trench walls vertically from trench bottom to 12 inches higher than top of conduits UNO.
c. Excavate trenches sufficiently wide to maintain 12” minimum separation between communications conduits and all power conduits.
d. Excavate and shape trench bottoms to provide uniform bearing and support of conduits. Shape subgrade to provide continuous support for joints, fittings, and bodies of conduits. Remove projecting stones and sharp objects along trench subgrade. Excavate trenches 6 inches deeper than elevation required in rock or other unyielding bearing material to allow for bedding course.
e. Trenches in Tree- and Plant-Protection Zones:

1) Hand-excavate to indicated lines, cross sections, elevations, and subgrades. Use narrow-tine spading forks to comb soil and expose roots. Do not break, tear, or chop exposed roots. Do not use mechanical equipment that rips, tears, or pulls roots.
2) Do not cut main lateral roots or taproots; cut only smaller roots that interfere with installation of utilities.

2. Initial Backfill

a. Place backfill on subgrades free of mud, frost, snow, or ice.
b. Place and compact bedding course on trench bottoms. Shape bedding course to provide continuous support for joints, fittings, and bodies of conduits.

3. Install manufactured duct elbows for stub-up at poles and equipment and at building entrances through floor unless otherwise indicated. Encase elbows for stub-up ducts throughout length of elbow.

4. Install manufactured rigid steel conduit elbows for stub-ups at poles and equipment and at building entrances through floor.

    a. Couple steel conduits to ducts with adapters designed for this purpose, and encase coupling with 3 inches of concrete for a minimum of 12 inches on each side of the coupling.
    b. For stub-ups at equipment mounted on outdoor concrete bases and where conduits penetrate building foundations, extend steel conduit horizontally a minimum of 60 inches from edge of foundation or equipment base. Install insulated grounding bushings on terminations at equipment.

5. Backfill - After installing conduit, backfill and compact. Start at tie-in point, and work toward end of conduit run, leaving conduit at end of run free to move with expansion and contraction as temperature changes during this process.

    a. Trenches under Footings: Backfill trenches excavated under footings and within 18 inches of bottom of footings with satisfactory soil; fill with concrete to elevation of bottom of footings.
    b. Trenches under Roadways: Provide 4-inch thick, concrete-base slab support for conduits less than 30 inches below surface of roadways. After installing and testing, completely encase piping or conduit in a minimum of 4 inches of concrete before backfilling or placing roadway subbase course.
    c. Initial Backfill: Place and compact initial backfill of subbase material, free of particles larger than 1 inch in any dimension, to a height of 12 inches over the conduits. Carefully compact initial backfill under conduit haunches and compact evenly up on both sides and along the full length of conduit to avoid damage or displacement of piping or conduit. Coordinate backfilling with utilities testing.
    d. After placing controlled backfill to within 12 inches of finished grade, make final conduit connection at end of run and complete backfilling with normal compaction.

6. Underground Warning Tape: Comply with requirements in Section 260553 "Identification for Electrical Systems."

7. Compaction - Firmly hand tamp backfill around conduit to provide maximum supporting strength. Coordinate all requirements with site

civil specifications. Prior to commencing work. the more stringent requirement shall take precedence.

a. Compact each layer of initial and final backfill soil material at 95 percent.

3.05 INSTALLATION OF UNDERGROUND HANDHOLES AND BOXES

A. Install handholes and boxes level and plumb and with orientation and depth coordinated with connecting conduits to minimize bends and deflections required for proper entrances.

B. Unless otherwise indicated, support units on a level bed of crushed stone or gravel, graded from 1/2-inch sieve to No. 4 sieve and compacted to same density as adjacent undisturbed earth.

C. Elevation: In roadway or vehicle access areas, set so cover surface will be flush with finished grade. Set covers of other enclosures 1 inch above finished grade.

D. Where required, field-cut openings for conduits according to enclosure manufacturer's written instructions. Cut wall of enclosure with a tool designed for material to be cut. Size holes for terminating fittings to be used, and seal around penetrations after fittings are installed.

3.06 SLEEVE AND SLEEVE-SEAL INSTALLATION FOR ELECTRICAL PENETRATIONS

A. Install sleeves and sleeve seals at penetrations of exterior floor and wall assemblies. Comply with requirements in Section 260544 "Sleeves and Sleeve Seals for Electrical Raceways and Cabling."

3.07 FIRESTOPPING

A. Install firestopping at penetrations of fire-rated floor and wall assemblies.

3.08 PROTECTION

A. Protect coatings, finishes, and cabinets from damage and deterioration.

1. Repair damage to galvanized finishes with zinc-rich paint recommended by manufacturer.

2. Repair damage to PVC coatings or paint finishes with matching touchup coating recommended by manufacturer.

END OF SECTION 26 05 33

(This page intentionally left blank)

PART 1 GENERAL

1.01 SUMMARY

A. Section Includes:

1. Sleeves for raceway and cable penetration of non-fire-rated construction walls and floors.

2. Sleeve-seal systems.

3. Sleeve-seal fittings.

4. Grout.

5. Silicone sealants.

1.02 ACTION SUBMITTALS

A. Product Data: For each type of product.

PART 2 PRODUCTS

2.01 SLEEVES

A. Wall Sleeves:

1. Steel Pipe Sleeves: ASTM A 53/A 53M, Type E, Grade B, Schedule 40, zinc coated, plain ends.

B. Sleeves for Conduits Penetrating Non-Fire-Rated Gypsum Board Assemblies: Galvanized-steel sheet; 0.0239-inch (0.6-mm) minimum thickness; round tube closed with welded longitudinal joint, with tabs for screw-fastening the sleeve to the board.

C. Sleeves for Rectangular Openings:

1. Material: Galvanized sheet steel.

2. Minimum Metal Thickness:

a. For sleeve cross-section rectangle perimeter less than 50 inches (1270 mm) and with no side larger than 16 inches (400 mm), thickness shall be 0.052 inch (1.3 mm).
b. For sleeve cross-section rectangle perimeter 50 inches (1270 mm) or more and one or more sides larger than 16 inches (400 mm), thickness shall be 0.138 inch (3.5 mm).

2.02 SLEEVE-SEAL SYSTEMS

A. Description: Modular sealing device, designed for field assembly, to fill annular space between sleeve and raceway or cable.

1. Manufacturers: Subject to compliance with requirements, available manufacturers offering products that may be incorporated into the Work include, but are not limited to, the following:

a. Advance Products & Systems, Inc.
b. CALPICO, Inc.
c. Metraflex Company (The).
d. Pipeline Seal and Insulator, Inc.
e. Proco Products, Inc.
f. 3M

2. Sealing Elements: EPDM rubber interlocking links shaped to fit surface of pipe. Include type and number required for pipe material and size of pipe.

3. Pressure Plates: Stainless Steel.

4. Connecting Bolts and Nuts: Stainless Steel of length required to secure pressure plates to sealing elements.

2.03 SLEEVE-SEAL FITTINGS

A. Description: Manufactured plastic, sleeve-type, waterstop assembly made for embedding in concrete slab or wall. Unit shall have plastic or rubber waterstop collar with center opening to match piping OD.

2.04 GROUT

A. Description: Non-shrink; recommended for interior and exterior sealing openings in non-fire-rated walls or floors.

B. Standard: ASTM C 1107/C 1107M, Grade B, post-hardening and volume-adjusting, dry, hydraulic-cement grout.

C. Design Mix: 5000-psi (34.5-MPa), 28-day compressive strength.

D. Packaging: Premixed and factory packaged.

2.05 SILICONE SEALANTS

A. Silicone Sealants: Single-component, silicone-based, neutral-curing elastomeric sealants of grade indicated below.

1. Grade: Pourable (self-leveling) formulation for openings in floors and other horizontal surfaces that are not fire rated.

B. Silicone Foams: Multicomponent, silicone-based liquid elastomers that, when mixed, expand and cure in place to produce a flexible, non-shrinking foam.

PART 3 EXECUTION

3.01 SLEEVE INSTALLATION FOR NON-FIRE-RATED ELECTRICAL PENETRATIONS

A. Comply with NECA 1.

B. Comply with NEMA VE 2 for cable tray and cable penetrations.

C. Sleeves for Conduits Penetrating Above-Grade Non-Fire-Rated Concrete and Masonry-Unit Floors and Walls:

1. Interior Penetrations of Non-Fire-Rated Walls and Floors:

a. Seal annular space between sleeve and raceway or cable, using joint sealant appropriate for size, depth, and location of joint.
b. Seal space outside of sleeves with mortar or grout. Pack sealing material solidly between sleeve and wall so no voids remain. Tool exposed surfaces smooth; protect material while curing.

2. Use pipe sleeves unless penetration arrangement requires rectangular sleeved opening.

3. Size pipe sleeves to provide 1/4-inch (6.4-mm) annular clear space between sleeve and raceway or cable unless sleeve seal is to be installed, **unless seismic criteria require different clearance**.

4. Install sleeves for wall penetrations unless core-drilled holes or formed openings are used. Install sleeves during erection of walls. Cut sleeves to length for mounting flush with both surfaces of walls. Deburr after cutting.

5. Install sleeves for floor penetrations. Extend sleeves installed in floors 2 inches (50 mm) above finished floor level. Install sleeves during erection of floors.

D. Sleeves for Conduits Penetrating Non-Fire-Rated Gypsum Board Assemblies:

1. Use circular metal sleeves unless penetration arrangement requires rectangular sleeved opening.

2. Seal space outside of sleeves with approved joint compound for gypsum board assemblies.

E. Roof-Penetration Sleeves: Seal penetration of individual raceways and cables with flexible boot-type flashing units applied in coordination with roofing work, and in accordance with roof system manufacturer's warranty requirements.

F. Aboveground, Exterior-Wall Penetrations: Seal penetrations using steel pipe sleeves and mechanical sleeve seals. Select sleeve size to allow for 1-inch (25-mm) annular clear space between pipe and sleeve for installing mechanical sleeve seals.

G. Underground, Exterior-Wall and Floor Penetrations: Install cast-iron pipe sleeves. Size sleeves to allow for 1-inch (25-mm) annular clear space between raceway or cable and sleeve for installing sleeve-seal system.

3.02 SLEEVE-SEAL-SYSTEM INSTALLATION

A. Install sleeve-seal systems in sleeves in exterior concrete walls and slabs-on-grade at raceway entries into building.

B. Install type and number of sealing elements recommended by manufacturer for raceway or cable material and size. Position raceway or cable in center of sleeve. Assemble mechanical sleeve seals and install in annular space between raceway or cable and sleeve. Tighten bolts against pressure plates that cause sealing elements to expand and make watertight seal.

3.03 SLEEVE-SEAL-FITTING INSTALLATION

A. Install sleeve-seal fittings in new walls and slabs as they are constructed.

B. Assemble fitting components of length to be flush with both surfaces of concrete slabs and walls. Position waterstop flange to be centered in concrete slab or wall.

C. Secure nailing flanges to concrete forms.

D. Using grout, seal the space around outside of sleeve-seal fittings.

END OF SECTION 26 05 44

(This page intentionally left blank)

PART 1 GENERAL

1.01 SUMMARY

A. Section Includes:

1. Restraint channel bracings.
2. Restraint cables.
3. Seismic-restraint accessories.
4. Mechanical anchor bolts.

1.02 ACTION SUBMITTALS

A. Delegated-Design Submittal: For each seismic-restraint device.

1. Include design calculations and details for selecting seismic restraints complying with performance requirements, design criteria, and analysis data signed and sealed by the qualified professional engineer responsible for their preparation.
2. Design Calculations: Calculate static and dynamic loading caused by equipment weight, operation, and seismic forces required to select seismic restraints and for designing vibration isolation bases.
3. Seismic Restraint Details:
    a. Design Analysis: To support selection and arrangement of seismic restraints. Include calculations of combined tensile and shear loads.
    b. Details: Indicate fabrication and arrangement. Detail attachments of restraints to the restrained items and to the structure. Show attachment locations, methods, and spacings. Identify components, list their strengths, and indicate directions and values of forces transmitted to the structure during seismic events. Indicate association with vibration isolation devices.
    c. In lieu of design analysis and details, preapproval documentation by OSHPD, ICC-ES or another agency acceptable to authorities having jurisdiction are acceptable.

1.03 QUALITY ASSURANCE

A. Comply with seismic-restraint requirements in the IBC unless requirements in this Section are more stringent.

B. Seismic-restraint devices shall have horizontal and vertical load testing and analysis. They shall bear anchorage preapproval from OSHPD in addition to preapproval, showing maximum seismic-restraint ratings, by ICC-ES or another agency acceptable to authorities having jurisdiction. Ratings based on independent testing are preferred to ratings based on calculations. If preapproved ratings are not available, submittals based on independent testing are preferred. Calculations (including combining shear and tensile loads) that support seismic-restraint designs must be signed and sealed by a qualified professional engineer.

C. Comply with NFPA 70.

PART 2 PRODUCTS

2.01 PERFORMANCE REQUIREMENTS

A. Seismic-Restraint Loading:

1. Design seismic restraints for components for seismic design forces defined in Chapter 13 of ASCE 7-10.

   a. Building Risk Category: I.
   b. Design Spectral Response Acceleration at Short Periods, S_{DS} = 0.207.
   c. Component Importance Factor, I_P = 1.0 for electrical equipment except for components required for life-safety purposes after an earthquake such as egress lighting and fire alarm control panel where I_P = 1.5.
   d. Component Response Modification Factor, R_P: See Table 13.6-1 of ASCE 7-10
   e. Component Amplification Factor, a_P: See Table 13.6-1 of ASCE 7-10

2.02 RESTRAINT CHANNEL BRACINGS

A. Manufacturers: Subject to compliance with requirements, available manufacturers offering products that may be incorporated into the Work include, but are not limited to the following:

1. Atkore Unistrut

2. B-line, an Eaton business.

3. Hilti, Inc.

4. Mason Industries, Inc.

B. Description: MFMA-4, shop- or field-fabricated bracing assembly made of slotted steel channels with accessories for attachment to braced component at one end and to building structure at the other end, with other matching components, and with corrosion-resistant coating; rated in tension, compression, and torsion forces.

2.03 RESTRAINT CABLES

A. Manufacturers: Subject to compliance with requirements, available manufacturers offering products that may be incorporated into the Work include, but are not limited to the following:

1. Gripple Inc.

2. Kinetics Noise Control, Inc.

3. Vibration & Seismic Technologies, LLC.

4. Vibration Mountings & Controls, Inc.

B. Restraint Cables: ASTM A 603 galvanized steel cables. End connections made of steel assemblies with thimbles, brackets, swivel, and bolts designed for restraining cable service; with a minimum of two clamping bolts for cable engagement.

2.04 SEISMIC-RESTRAINT ACCESSORIES

A. Manufacturers: Subject to compliance with requirements, available manufacturers offering products that may be incorporated into the Work include, but are not limited to the following:

1. Atkore Unistrut

2. B-line, an Eaton business.

3. Kinetics Noise Control, Inc.

4. Mason Industries, Inc.

B. Hanger-Rod Stiffener: Steel tube or steel slotted-support-system sleeve with internally bolted connections to hanger rod.

C. Hinged and Swivel Brace Attachments: Multifunctional steel connectors for attaching hangers to rigid channel bracings and restraint cables.

D. Bushings for Floor-Mounted Equipment Anchor Bolts: Neoprene bushings designed for rigid equipment mountings and matched to type and size of anchor bolts and studs.

E. Bushing Assemblies for Wall-Mounted Equipment Anchorage: Assemblies of neoprene elements and steel sleeves designed for rigid equipment mountings and matched to type and size of attachment devices used.

F. Resilient Isolation Washers and Bushings: One-piece, molded, oil- and water-resistant neoprene, with a flat washer face.

2.05 MECHANICAL ANCHOR BOLTS

A. Manufacturers: Subject to compliance with requirements, available manufacturers offering products that may be incorporated into the Work include, but are not limited to the following:

1. B-line, an Eaton business.

2. Hilti, Inc.

3. Kinetics Noise Control, Inc.

4. Mason Industries, Inc.

B. Mechanical Anchor Bolts: Drilled-in and stud-wedge or female-wedge type in zinc-coated steel for interior applications and stainless steel for exterior applications. Select anchor bolts with strength required for anchor and as tested according to ASTM E 488.

PART 3 EXECUTION

3.01 APPLICATIONS

A. Multiple Raceways or Cables: Secure raceways and cables to trapeze member with clamps complying with delegated design submittal requirements.

B. Hanger-Rod Stiffeners: Install hanger-rod stiffeners where indicated or scheduled on Drawings to receive them and where required to prevent buckling of hanger rods caused by seismic forces.

C. Strength of Support and Seismic-Restraint Assemblies: Where not indicated, select sizes of components so strength will be adequate to carry present and future static and seismic loads within specified loading limits.

3.02 SEISMIC-RESTRAINT DEVICE INSTALLATION

A. Coordinate the location of embedded connection hardware with supported equipment attachment and mounting points and with requirements for concrete reinforcement and formwork.

B. Equipment and Hanger Restraints:

1. Install resilient, bolt-isolation washers on equipment anchor bolts where clearance between anchor and adjacent surface exceeds 0.125 inch (3.2 mm).

C. Install cables so they do not bend across edges of adjacent equipment or building structure.

D. Install bushing assemblies for mounting bolts for wall-mounted equipment, arranged to provide resilient media where equipment or equipment-mounting channels are attached to wall.

E. Attachment to Structure: If specific attachment is not indicated, anchor bracing to structure at flanges of beams, at upper truss chords of bar joists, or at concrete members.

F. Drilled-in Anchors:

1. Identify position of reinforcing steel and other embedded items prior to drilling holes for anchors. Locate and avoid prestressed tendons, electrical and telecommunications conduit, and gas lines.

2. Do not drill holes in concrete or masonry until concrete, mortar, or grout has achieved full design strength.

3. Wedge Anchors: Protect threads from damage during anchor installation. Heavy-duty sleeve anchors shall be installed with sleeve fully engaged in the structural element to which anchor is to be fastened.

4. Adhesive Anchors: Clean holes to remove loose material and drilling dust prior to installation of adhesive. Place adhesive in holes proceeding from the bottom of the hole and progressing toward the surface in such a manner as to avoid introduction of air pockets in the adhesive.

5. Set anchors to manufacturer's recommended torque using a torque wrench.

6. Install zinc-coated steel anchors for interior and stainless-steel anchors for exterior applications.

3.03 ACCOMMODATION OF DIFFERENTIAL SEISMIC MOTION

A. Install flexible connections in runs of raceways, cables, wireways, cable trays, and busways where they cross seismic joints, where adjacent sections or branches are supported by different structural elements, and where connection is terminated to equipment that is anchored to a different structural element from the one supporting them as they approach equipment.

END OF SECTION 26 05 48.16

PART 1 GENERAL

1.01 RELATED DOCUMENTS

A. Drawings and general provisions of the Contract, including General and Supplementary Conditions and Division 01 00 00 Specification Sections, apply to this Section.

1.02 SUMMARY

A. Section Includes:

1. Color and legend requirements for raceways, conductors, and warning labels and signs.

2. Tapes and stencils.

3. Signs.

4. Cable ties.

PART 2 PRODUCTS

2.01 PERFORMANCE REQUIREMENTS

A. Comply with ASME A13.1.

B. Comply with NFPA 70.

C. Comply with 29 CFR 1910.144 and 29 CFR 1910.145.

D. Comply with ANSI Z535.4 for safety signs and labels.

E. Comply with NFPA 70E requirements for arc-flash warning labels.

F. Adhesive-attached labeling materials, including label stocks, laminating adhesives, and inks used by label printers, shall comply with UL 969.

2.02 COLOR AND LEGEND REQUIREMENTS

A. Raceways and Cables Carrying Circuits within Buildings. Identify the covers of each junction and pull box of the following systems with paint as follows:

1. Battery or Generator Backed up Emergency System: Orange

2. Fire Detection and Alarm System: Red

3. Systems with voltage greater than 600V: Yellow

4. Direct current systems (Solar PV system): Green

5. Affix label with black letters on color noted above indicating voltage and system or service type.

B. Conductor Color-Coding for Phase and Voltage-Level Identification, 600 V or Less: Use colors listed below for ungrounded service, feeder and branch-circuit conductors.

1. Utilize factory applied, colored insulation for No. 8 AWG and smaller.

2. If Authority Having Jurisdiction permits, for sizes larger than No. 8 AWG, where conductors with factory colored insulation are not commonly available, colored non-aging, plastic tape may be field applied. Apply in half-lapped turns for a minimum distance of 6 inches (150 mm) from terminal points and in boxes where splices or taps are made. Apply last two turns of tape with no tension to prevent possible unwinding. Locate bands to avoid obscuring factory cable markings.

3. Colors for Three-Phase Wye, 208/120V Circuits:

   a. Phase A: Black.
   b. Phase B: Red.
   c. Phase C: Blue.
   d. Neutral: White.

4. Colors for Single-Phase, 240/120V Circuits:

   a. Phase A: Black.
   b. Phase B: Red.
   c. Neutral: White.

5. Colors for Three-Phase, 480/277V Circuits:

   a. Phase A: Brown.
   b. Phase B: Orange.
   c. Phase C: Yellow.
   d. Neutral: Gray.

6. Colors for Three-Phase, Center-Tapped Delta, 240/120V Circuits:

   a. Phase A: Black.
   b. Phase B: Red.
   c. Wild Leg: Orange.
   d. Neutral: White.

7. Color for Equipment Grounds: Bare copper or Green.

8. Colors for Isolated Grounds: Green with white stripe.

9. Lighting Circuit Switched Legs and 3-way/4-way Traveler: Color unique to those listed above.

C. Warning Label Colors:

1. Identify system voltage with black letters on an orange background.

D. Warning labels and signs shall include, but are not limited to, the following legends:

1. Multiple Power Source Warning: "DANGER - ELECTRICAL SHOCK HAZARD - EQUIPMENT HAS MULTIPLE POWER SOURCES."

2. Workspace Clearance Warning: "WARNING - OSHA REGULATION - AREA IN FRONT OF ELECTRICAL EQUIPMENT MUST BE KEPT CLEAR FOR 36 INCHES (915 MM)."

3. Arc Flash Warning: “WARNING – KEEP CLEAR. RISK OF ELECTRIC SHOCK OR ARC FLASH. PPE REQUIRED.”.

E. Equipment Identification Labels:

1. Black letters on a white field, or white letters on a black field.

2. Include equipment designation and circuit.

3. Exterior equipment labels shall have a rivet or screw-mounted label on the exterior door.

4. 1” minimum height letters for service disconnect and emergency shut-off switches.

5. 1/2" minimum height letters for panelboards, switchboards, relay enclosures and transformers.

6. 1/4" minimum height letters for disconnect switches and motor starters.

7. 1/8” minimum height letters for device cover plates (where required).

2.03 TAPES AND STENCILS

A. Self-Adhesive Vinyl Tape: Colored, heavy-duty, waterproof, fade-resistant; not less than 3 mils (0.08 mm) thick by 1 to 2 inches (25 to 50 mm) wide; compounded for outdoor use.

B. Floor Marking Tape: 2-inch- (50-mm-) wide, 5-mil (0.125-mm) pressure-sensitive vinyl tape, with yellow and black stripes and clear vinyl overlay.

C. Underground-Line Warning Tape:

1. Tape:

a. Recommended by manufacturer for the method of installation and suitable to identify and locate underground electrical and communications utility lines.
b. Printing on tape shall be permanent and shall not be damaged by burial operations.
c. Tape material and ink shall be chemically inert and not subject to degradation when exposed to acids, alkalis, and other destructive substances commonly found in soils.

2. Color and Printing:

a. Comply with ANSI Z535.1, ANSI Z535.2, ANSI Z535.3, ANSI Z535.4, and ANSI Z535.5.
b. Inscriptions for Red-Colored Tapes: "ELECTRIC LINE, HIGH VOLTAGE”.
c. Inscriptions for Orange-Colored Tapes: "TELEPHONE CABLE, CATV CABLE, COMMUNICATIONS CABLE, OPTICAL FIBER CABLE”.

3. Type:

a. Detectable three-layer laminate, consisting of a printed pigmented polyolefin film, a solid aluminum-foil core, and a clear protective film that allows inspection of the continuity of the conductive core; bright colored, continuous-printed on one side with the inscription of the utility, compounded for direct-burial service.
b. Width: 3 inches (75 mm).

c. Overall Thickness: 5 mils (0.125 mm).
d. Foil Core Thickness: 0.35 mil (0.00889 mm).
e. Weight: 28 lb/1000 sq. ft. (13.7 kg/100 sq. m).
f. Tensile according to ASTM D 882: 70 lbf (311.3 N) and 4600 psi (31.7 MPa).

2.04 SIGNS

A. Baked-Enamel Signs:

1. Preprinted aluminum signs, high-intensity reflective, punched or drilled for fasteners, with colors, legend, and size required for application.

2. 1/4-inch (6.4-mm) grommets in corners for mounting.

3. Nominal Size: 7 by 10 inches (180 by 250 mm).

B. Laminated Acrylic or Melamine Plastic Signs:

1. Engraved legend.

2. Thickness:

a. For signs up to 20 sq. in. (129 sq. cm), minimum 1/16 inch (1.6 mm) thick.
b. For signs larger than 20 sq. in. (129 sq. cm), 1/8 inch (3.2 mm) thick.
c. Engraved legend with black letters on white face
d. Punched or drilled for mechanical fasteners with 1/4-inch (6.4-mm) grommets in corners for mounting.
e. Framed with mitered acrylic molding and arranged for attachment at applicable equipment.

2.05 CABLE TIES

A. General-Purpose Cable Ties: Fungus inert, self-extinguishing, one piece, self-locking, and Type 6/6 nylon.

1. Minimum Width: 3/16 inch (5 mm).

2. Tensile Strength at 73 Deg F (23 Deg C) according to ASTM D 638: 12,000 psi (82.7 MPa).

3. Temperature Range: Minus 40 to plus 185 deg F (Minus 40 to plus 85 deg C).

4. Color: Black, except where used for color-coding.

B. UV-Stabilized Cable Ties: Fungus inert, designed for continuous exposure to exterior sunlight, self-extinguishing, one piece, self-locking, and Type 6/6 nylon.

1. Minimum Width: 3/16 inch (5 mm).

2. Tensile Strength at 73 Deg F (23 Deg C) according to ASTM D 638: 12,000 psi (82.7 MPa).

3. Temperature Range: Minus 40 to plus 185 deg F (Minus 40 to plus 85 deg C).

4. Color: Black.

C. Plenum-Rated Cable Ties: Self-extinguishing, UV stabilized, one piece, and self-locking.

1. Minimum Width: 3/16 inch (5 mm).

2. Tensile Strength at 73 Deg F (23 Deg C) according to ASTM D 638: 7000 psi (48.2 MPa).

3. UL 94 Flame Rating: 94V-0.

4. Temperature Range: Minus 50 to plus 284 deg F (Minus 46 to plus 140 deg C).

5. Color: Black.

2.06 MISCELLANEOUS IDENTIFICATION PRODUCTS

A. Paint: Comply with requirements in painting Sections for paint materials and application requirements. Retain paint system applicable for surface material and location (exterior or interior).

B. Fasteners for Labels and Signs: Self-tapping, stainless-steel screws or stainless-steel machine screws with nuts and flat and lock washers.

PART 3 EXECUTION

3.01 COORDINATION

A. Verify and coordinate identification names, abbreviations, colors, and other features with requirements in other Sections requiring identification applications, Drawings, Shop Drawings, manufacturer's wiring diagrams, and operation and maintenance manual. Use consistent designations throughout Project.

B. Coordinate identification with Project Drawings, manufacturer's wiring diagrams, and operation and maintenance manual.

C. Coordinate installation of identifying devices with location of access panels and doors.

D. Install identifying devices before installing acoustical ceilings and similar concealment.

3.02 INSTALLATION

A. Verify identity of each item before installing identification products.

B. Apply identification devices to surfaces that require finish after completing finish work.

C. Install signs with approved legend to facilitate proper identification, operation, and maintenance of electrical systems and connected items.

D. Self-Adhesive Identification Products: Before applying electrical identification products, clean substrates of substances that could impair bond, using materials and methods recommended by manufacturer of identification product.

E. Self-Adhesive Identification Products used on the exterior of the building: Before applying electrical identification products, clean substrates of substances that could impair bond, using materials and methods recommended by manufacturer of identification product. Labels shall have a rivet or screw mounted on each side of the label, located on the exterior door.

F. Elevated Components: Increase sizes of labels, signs, and letters to those appropriate for viewing from the floor.

G. Floor Marking Tape: Apply stripes to finished surfaces following manufacturer's written instructions.

H. Underground Line Warning Tape:

1. During backfilling of trenches, install continuous underground-line warning tape directly above cable or raceway at 6 to 8 inches (150 to 200 mm) below finished grade. Use multiple tapes where width of multiple lines installed in a common trench or concrete envelope exceeds 16 inches (400 mm) overall.

2. Install underground-line warning tape for direct-buried cables and cables in raceways.

I. Laminated Acrylic or Melamine Plastic Signs:

1. Attach signs and plastic labels that are not self-adhesive type with mechanical fasteners appropriate to the location and substrate.

J. Cable Ties: General purpose, for attaching tags, except as listed below:

1. Outdoors: UV-stabilized nylon.

2. In Spaces Handling Environmental Air: Plenum rated.

3.03 IDENTIFICATION SCHEDULE

A. Install identification materials and devices at locations for most convenient viewing without interference with operation and maintenance of equipment. Install access doors or panels to provide view of identifying devices.

B. Identify conductors, cables, and terminals in enclosures and at junctions, terminals, pull points, and locations of high visibility. Identify by system and circuit designation.

C. Accessible Fittings for Raceways and Cables within Buildings: Identify the covers of each junction and pull box of the following systems with self-adhesive labels containing the wiring system legend and system voltage. System legends shall be as follows:

1. "EMERGENCY POWER."

2. "FIRE ALARM."

3. "HIGH VOLTAGE."

4. “DIRECT CURRENT.”

D. Control-Circuit Conductor Identification: For conductors and cables in pull and junction boxes, manholes, and handholes, use write-on tags with the conductor or cable designation, origin, and destination.

E. Control-Circuit Conductor Termination Identification: For identification at terminations, provide self-adhesive wraparound labels with the conductor designation.

F. Conductors to Be Extended in the Future: Attach write-on tags to conductors and list source.

G. Auxiliary Electrical Systems Conductor Identification: Identify field-installed alarm, control, and signal connections.

1. Identify conductors, cables, and terminals in enclosures and at junctions, terminals, and pull points. Identify by system and circuit designation.

2. Use system of marker tape designations that is uniform and consistent with system used by manufacturer for factory-installed connections.

3. Coordinate identification with Project Drawings, manufacturer's wiring diagrams, and the Operation and Maintenance Manual.

H. Locations of Underground Lines: Underground-line warning tape for power, lighting, communication, and control wiring and optical-fiber cable.

I. Workspace Indication: Apply floor marking tape to finished surfaces. Show working clearances in the direction of access to live parts. Workspace shall comply with NFPA 70 and 29 CFR 1926.403 unless otherwise indicated. Do not install at flush-mounted panelboards and similar equipment in finished spaces.

J. Instructional Signs: Self-adhesive labels, including the color code for grounded and ungrounded conductors.

K. Warning Labels for Indoor Cabinets, Boxes, and Enclosures for Power and Lighting: Self-adhesive equipment labels.

1. Apply to exterior of door, cover, or other access.

2. For equipment with multiple power or control sources, apply to door or cover of equipment, including, but not limited to, the following:

a. Power-transfer switches.

b. Controls with external control power connections.

L. Arc Flash Warning Labeling: Self-adhesive labels.

M. Operating Instruction Signs: Install instruction signs to facilitate proper operation and maintenance of electrical systems and items to which they connect. Install instruction signs with approved legend where instructions are needed for system or equipment operation.

N. Emergency Operating Instruction Signs: Self-adhesive labels, Laminated acrylic or melamine plastic signs with white legend on a red background with minimum 3/8-inch- (10-mm-) high letters for emergency instructions at equipment used for power transfer and load shedding.

O. Equipment Identification Labels:

1. Indoor Equipment: Engraved, laminated acrylic or melamine plastic label.

2. Outdoor Equipment: Engraved, Laminated acrylic or melamine label.

3. Equipment to Be Labeled:

a. Panelboards/Switchboards:

1) Label shall be self-adhesive, engraved, laminated acrylic or melamine. Label shall include: Panelboard/switchboard name, voltage, amperage, number of phases and wires, source and available fault current with date calculated.
2) Typewritten directory of circuits in the location provided by panelboard manufacturer. Spares shall be filled in by hand with pencil.
3) On main distribution panel door / switchboard front provide a laminated one-line diagram of the electrical system and all panel configurations.

b. Enclosures and electrical cabinets.
c. Access doors and panels for concealed electrical items.
d. Switchgear.
e. Transformers: Label that includes tag designation shown on Drawings for the transformer, feeder, and panelboards or equipment supplied by the secondary.
f. Substations.
g. Emergency system boxes and enclosures.
h. Motor-control centers.

i. Enclosed switches.
j. Enclosed circuit breakers.
k. Enclosed controllers.
l. Variable-speed controllers.
m. Push-button stations.
n. Power transfer equipment.
o. Contactors.
p. Remote-controlled switches, dimmer modules, and control devices.
q. Battery-inverter units.
r. Battery racks.
s. Power-generating units.
t. Monitoring and control equipment.
u. UPS equipment.
v. Wiring devices: See specification section “Wiring Devices”.

END OF SECTION 26 05 53

(This page intentionally left blank)

PART 1 GENERAL

1.01 SUMMARY

A. Section includes a computer-based study to determine the following:

1. Arc-flash study - Determine the arc-flash hazard distance and the incident energy to which personnel could be exposed during work on or near electrical equipment.

2. Overcurrent protective device coordination study - Determine overcurrent protective device settings for selective tripping.

1.02 ACTION SUBMITTALS

A. Product Data: For computer software program to be used for studies.

B. Study Submittals: Submit the following submittals after the approval of system protective devices submittals. Submittals shall be in digital form.

1. Arc-flash study input data, including completed computer program input data sheets.

2. Arc-flash study report; signed, dated, and sealed by a qualified professional engineer.

a. Submit study report for action prior to receiving final approval of the distribution equipment submittals. If formal completion of studies will cause delay in equipment manufacturing, obtain approval from Architect for preliminary submittal of sufficient study data to ensure that the selection of devices and associated characteristics is satisfactory.

1.03 INFORMATIONAL SUBMITTALS

A. Qualification Data: For Arc-Flash/Coordination Study Specialist.

B. Product Certificates:

1. For arc-flash hazard analysis software, certifying compliance with IEEE 1584 and NFPA 70E.

2. For overcurrent protective device coordination study software, certifying compliance with IEEE 399.

1.04 CLOSEOUT SUBMITTALS

A. Operation and Maintenance Data:

1. From the Protective Device Coordination Study Report:

a. One-line diagram.
b. Protective device coordination study.
c. Time-current coordination curves

2. Operation and Maintenance Procedures: Provide maintenance procedures, that comply with requirements in NFPA 70E, for use by Owner's personnel.

1.05 QUALITY ASSURANCE

A. Studies shall use computer programs that are distributed nationally and are in wide use. Software algorithms shall comply with requirements of standards and guides specified in this Section. Manual calculations are unacceptable.

B. Arc-Flash/Coordination Study Software Developer Qualifications: An entity that owns and markets computer software used for studies, having performed successful studies of similar magnitude on electrical distribution systems using similar devices.

1. The computer program shall be developed under the charge of a licensed professional engineer who holds IEEE Computer Society's Certified Software Development Professional certification.

C. Arc-Flash/Coordination Study Specialist Qualifications: Professional engineer in charge of performing the study, analyzing the arc flash, and documenting recommendations, licensed in the state where Project is located. All elements of the study shall be performed under the direct supervision and control of this professional engineer.

D. Field Adjusting Agency Qualifications: An independent agency, with the experience and capability to adjust overcurrent devices and to conduct the testing indicated, that is a member company of the InterNational Electrical Testing Association or is a nationally recognized testing laboratory (NRTL) as defined by OSHA in 29 CFR 1910.7, and that is acceptable to authorities having jurisdiction.

PART 2 PRODUCTS

2.01 SOFTWARE DEVELOPERS

A. Comply with IEEE 242, IEEE 399, IEEE 1584 and NFPA 70E.

B. Analytical features of device coordination study computer software program shall have the capability to calculate mandatory features as listed in IEEE 399.

C. Computer software program shall be capable of plotting and diagramming time-current-characteristic curves as part of its output. Computer software program shall report device settings and ratings of all overcurrent protective devices and shall demonstrate selective coordination by computer-generated, time-current coordination plots.

2.02 PROTECTIVE DEVICE COORDINATION STUDY REPORT CONTENTS

A. Executive summary.

B. Study descriptions, purpose, basis and scope. Include case descriptions, definition of terms and guide for interpretation of the computer printout.

C. One-line diagram, showing the following:

1. Protective device designations and ampere ratings.

2. Cable size and lengths.

3. Transformer kilovolt ampere (kVA) and voltage ratings.

4. Motor and generator designations and kVA ratings.

5. Switchgear, switchboard, motor-control center, and panelboard designations.

D. Study Input Data: As described in "Power System Data" Article.

E. Protective Device Coordination Study:

1. Report recommended settings of protective devices, ready to be applied in the field. Use manufacturer's data sheets for recording the recommended setting of overcurrent protective devices when available.

a. Phase and Ground Relays:

1) Device tag.
2) Relay current transformer ratio and tap, time dial, and instantaneous pickup value.
3) Recommendations on improved relaying systems, if applicable.

b. Circuit Breakers:

1) Adjustable pickups and time delays (long time, short time, ground).
2) Adjustable time-current characteristic.
3) Adjustable instantaneous pickup.
4) Recommendations on improved trip systems, if applicable.

c. Fuses: Show current rating, voltage, and class.

F. Time-Current Coordination Curves: Determine settings of overcurrent protective devices to achieve selective coordination. Graphically illustrate that adequate time separation exists between devices installed in series, including power utility company's upstream devices. Prepare separate sets of curves for the switching schemes and for emergency periods where the power source is local generation. Show the following information:

1. Device tag and title, one-line diagram with legend identifying the portion of the system covered.

2. Terminate device characteristic curves at a point reflecting maximum symmetrical or asymmetrical fault current to which the device is exposed.

3. Identify the device associated with each curve by manufacturer type, function, and, if applicable, tap, time delay, and instantaneous settings recommended.

4. Plot the following listed characteristic curves, as applicable:

a. Power utility's overcurrent protective device.
b. Low-voltage fuses including manufacturer's minimum melt, total clearing, tolerance, and damage bands.
c. Low-voltage equipment circuit-breaker trip devices, including manufacturer's tolerance bands.
d. Transformer full-load current, magnetizing inrush current.
e. Ground-fault protective devices.

f. The largest feeder circuit breaker in each motor-control center and panelboard.

5. Provide adequate time margins between device characteristics such that selective operation is achieved.

6. Comments and recommendations for system improvements.

2.03 ARC-FLASH STUDY REPORT CONTENT

A. Executive summary.

B. Study descriptions, purpose, basis and scope.

C. One-line diagram, showing the following:

1. Protective device designations and ampere ratings.

2. Cable size and lengths.

3. Transformer kilovolt ampere (kVA) and voltage ratings.

4. Motor and generator designations and kVA ratings.

5. Switchgear, switchboard, motor-control center and panelboard designations.

D. Study Input Data: As described in "Power System Data" Article.

E. Arc-Flash Study Output:

1. Interrupting Duty Report: Three-phase and unbalanced fault calculations, showing the following for each overcurrent device location:

a. Voltage.
b. Calculated symmetrical fault-current magnitude and angle.
c. Fault-point X/R ratio.
d. No AC Decrement (NACD) ratio.
e. Equivalent impedance.
f. Multiplying factors for 2-, 3-, 5-, and 8-cycle circuit breakers rated on a symmetrical basis.
g. Multiplying factors for 2-, 3-, 5-, and 8-cycle circuit breakers rated on a total basis.

F. Incident Energy and Flash Protection Boundary Calculations:

1. Arcing fault magnitude.

2. Protective device clearing time.

3. Duration of arc.

4. Arc-flash boundary.

5. Working distance.

6. Incident energy.

7. Hazard risk category.

8. Recommendations for arc-flash energy reduction.

G. Fault study input data, case descriptions, and fault-current calculations including a definition of terms and guide for interpretation of the computer printout.

PART 3 EXECUTION

3.01 EXAMINATION

A. Examine Project overcurrent protective device submittals for compliance with electrical distribution system coordination requirements and other conditions affecting performance. Proceed with arc-flash study only after relevant equipment submittals have been assembled. Overcurrent protective devices that have not been submitted and approved prior to arc-flash study may not be used in the study.

3.02 ARC-FLASH HAZARD ANALYSIS

A. Comply with NFPA 70E and its Annex D for hazard analysis study.

B. Preparatory Studies:

1. Short-Circuit Study.

2. Protective Device Coordination Study.

C. Calculate maximum and minimum contributions of fault-current size.

1. The minimum calculation shall assume that the utility contribution is at a minimum and shall assume no motor load.

2. The maximum calculation shall assume a maximum contribution from the utility and shall assume motors to be operating under full-load conditions.

D. Calculate the arc-flash protection boundary and incident energy at locations in the electrical distribution system where personnel could perform work on energized parts.

E. Include low-voltage equipment locations, except equipment rated 240-V ac or less fed from transformers less than 125 kVA.

F. Safe working distances shall be specified for calculated fault locations based on the calculated arc-flash boundary, considering incident energy of 1.2 cal/sq.cm.

G. Incident energy calculations shall consider the accumulation of energy over time when performing arc-flash calculations on buses with multiple sources. Iterative calculations shall take into account the changing current contributions, as the sources are interrupted or decremented with time. Fault contribution from motors shall be decremented as follows:

1. Fault contribution from induction motors should not be considered beyond three to five cycles.

H. Arc-flash computation shall include both line and load side of a circuit breaker as follows:

1. When the circuit breaker is in a separate enclosure.

2. When the line terminals of the circuit breaker are separate from the work location.

I. Base arc-flash calculations on actual overcurrent protective device clearing time. Cap maximum clearing time at two seconds based on IEEE 1584, Section B.1.2.

3.03 PROTECTIVE DEVICE COORDINATION STUDY

A. Comply with IEEE 242 for calculating short-circuit currents and determining coordination time intervals.

B. Comply with IEEE 399 for general study procedures.

C. The study shall be based on the device characteristics supplied by device manufacturer.

D. The extent of the electrical power system to be studied is indicated on Drawings.

E. Begin analysis at the service, extending down to the system overcurrent protective devices as follows:

1. To normal system low-voltage load buses where fault current is 10kA or less.

F. Study electrical distribution system from normal and alternate power sources throughout electrical distribution system for Project. Study all cases of system-switching configurations and alternate operations that could result in maximum fault conditions.

G. The calculations shall include the ac fault-current decay from induction motors. The calculations shall also account for the fault-current dc decrement, to address the asymmetrical requirements of the interrupting equipment.

1. For grounded systems, provide a bolted line-to-ground fault-current study for areas as defined for the three-phase bolted fault short-circuit study.

H. Calculate short-circuit momentary and interrupting duties for a three-phase bolted fault and single line-to-ground fault at each of the following:

1. Electric utility's supply termination point.

2. Switchgear.

3. Low-voltage switchgear.

4. Motor-control centers.

5. Standby generators and automatic transfer switches.

6. Branch circuit panelboards.

I. Protective Device Evaluation:

1. Evaluate equipment and protective devices and compare to short-circuit ratings.

2. Adequacy of switchgear, motor-control centers, and panelboard bus bars to withstand short-circuit stresses.

3.04 POWER SYSTEM DATA

A. Obtain all data necessary for the conduct of the arc-flash hazard analysis and overcurrent protective device study.

1. Verify completeness of data supplied on the one-line diagram on Drawings. Call discrepancies to the attention of Architect.

2. For new equipment, use characteristics submitted under the provisions of action submittals and information submittals for this Project.

B. Electrical Survey Data: Gather and tabulate the following input data to support study.

1. Product Data for overcurrent protective devices specified in other Sections and involved in overcurrent protective device coordination studies. Use equipment designation tags that are consistent with electrical distribution system diagrams, overcurrent protective device submittals, input and output data, and recommended device settings.

2. Obtain electrical power utility impedance at the service.

3. Power sources and ties.

4. Short-circuit current at each system bus, three phase and line-to-ground.

5. Full-load current of all loads.

6. Voltage level at each bus.

7. For transformers, include kVA, primary and secondary voltages, connection type, impedance, X/R ratio, taps measured in percent, and phase shift.

8. For circuit breakers and fuses, provide manufacturer and model designation. List type of breaker, type of trip and available range of settings, SCCR, current rating, and breaker settings.

9. Maximum demands from service meters.

10. Busway manufacturer and model designation, current rating, impedance, lengths, and conductor material.

11. Motor horsepower and NEMA MG 1 code letter designation.

12. Low-voltage cable sizes, lengths, number, conductor material and conduit material (magnetic or nonmagnetic).

13. Data sheets to supplement electrical distribution system diagram, cross-referenced with tag numbers on diagram, showing the following:

    a. Special load considerations, including starting inrush currents and frequent starting and stopping.
    b. Ratings, types, and settings of utility company's overcurrent protective devices.
    c. Special overcurrent protective device settings or types stipulated by utility company.
    d. Time-current-characteristic curves of devices indicated to be coordinated.
    e. Manufacturer, frame size, interrupting rating in amperes rms symmetrical, ampere or current sensor rating, long-time adjustment range, short-time adjustment range, and instantaneous adjustment range for circuit breakers.
    f. Manufacturer and type, ampere-tap adjustment range, time-delay adjustment range, instantaneous attachment adjustment range, and current transformer ratio for overcurrent relays.
    g. Panelboards, switchboards, motor-control center ampacity, and SCCR in amperes rms symmetrical.

3.05 FIELD ADJUSTING

A. Adjust relay and protective device settings according to the recommended settings provided by the coordination study. Field adjustments shall be completed by the engineering service division of the equipment manufacturer under the Startup and Acceptance Testing contract portion.

B. Make minor modifications to equipment as required to accomplish compliance with protective device coordination studies.

3.06 DEMONSTRATION

A. Engage the Arc-Flash Study Specialist to train Owner's maintenance personnel in the potential arc-flash hazards associated with working on energized equipment and the significance of the arc-flash warning labels.

B. Acquaint personnel in the fundamentals of operating the power system in normal and emergency modes.

C. Hand-out and explain the objectives of the coordination study, study descriptions, purpose, basis, and scope. Include case descriptions, definition of terms, and guide for interpreting the time-current coordination curves.

D. Adjust, operate, and maintain overcurrent protective device settings.

END OF SECTION 26 05 74

(This page intentionally left blank)

PART 1 GENERAL

1.01 SUMMARY

A. Section Includes:

1. Time switches.
2. Outdoor photoelectric switches.
3. Indoor occupancy and vacancy sensors.
4. Switchbox-mounted occupancy sensors
5. Digital timer light switches.
6. High-bay occupancy sensors.
7. Outdoor motion sensors.
8. Lighting contactors.
9. Emergency shunt relays.
10. Lighting Control Relay Panels

B. Related Requirements:

1. Section 26 27 26 "Wiring Devices" for wall-box dimmers and manual light switches.

1.02 ACTION SUBMITTALS

A. Product Data: For each type of product.

B. Shop Drawings:

1. Show installation details for occupancy/vacancy and light-level sensors.
2. Interconnection diagrams showing field-installed wiring.
3. Include diagrams for power, signal, and control wiring.

1.03 CLOSEOUT SUBMITTALS

A. Operation and maintenance data.

B. Remote Configuration Tools.

1.04 WARRANTY

A. Manufacturer's Warranty: Manufacturer and Installer agree to repair or replace lighting control devices that fail(s) in materials or workmanship within specified warranty period.

1. Warranty Period: Two year(s) from date of Substantial Completion.

PART 2 PRODUCTS

2.01 TIME SWITCHES

A. Manufacturers: Design is based on Intermatic ET1100 Series, but subject to compliance with requirements, available manufacturers offering products that may be incorporated into the Work include, but are not limited to the following:

1. Cooper Industries, Inc.

2. Intermatic, Inc.

3. Leviton Manufacturing Co., Inc.

4. Tork by NSi Industries LLC.

B. Electronic Time Switches: Solid state, programmable, with alphanumeric display; complying with UL 917.

1. Listed and labeled as defined in NFPA 70, by a qualified testing agency, and marked for intended location and application.

2. Contact Configuration: SPST, or as noted on plans.

3. Contact Rating: 20A ballast load, 120/240V ac.

4. Programs: Two on-off set points on a 24-hour schedule, allowing different set points for each day of the week and an annual holiday schedule that overrides the weekly operation on holidays.

5. Circuitry: Allow connection of a photoelectric relay as substitute for on-off function of a program on selected channels.

6. Astronomic Time: All channels.

7. Automatic daylight savings time changeover.

8. Battery Backup: Not less than seven days reserve, to maintain schedules and time clock.

2.02 OUTDOOR PHOTOELECTRIC SWITCHES

A. Manufacturers: Design is based on Intermatic NightFox Series, but subject to compliance with requirements, available manufacturers offering products that may be incorporated into the Work include, but are not limited to the following:

1. Cooper Industries, Inc.

2. Intermatic, Inc.

3. Leviton Manufacturing Co., Inc.

4. Tork by NSi Industries LLC.

B. Description: Solid state, with SPST dry contacts rated for 1000W incandescent or 1800VA tungsten, to operate connected relay, contactor coils, or microprocessor input; complying with UL 773A, and compatible with ballasts and LED lamps.

1. Listed and labeled as defined in NFPA 70, by a qualified testing agency, and marked for intended location and application.

2. Light-Level Monitoring Range: 1.5 to 10 fc (16.14 to 108 lux), with an adjustment for turn-on and turn-off levels within that range, and a directional lens in front of the photocell to prevent fixed light sources from causing turn-off.

3. Time Delay: Fifteen-second minimum, to prevent false operation.

4. Surge Protection: Metal-oxide varistor.

5. Mounting: Twist lock complies with NEMA C136.10, with base-and-stem mounting or stem-and-swivel mounting accessories as required to direct sensor to the north sky exposure.

6. Failure Mode: Luminaire stays ON.

2.03 INDOOR OCCUPANCY AND VACANCY SENSORS

A. Manufacturers: Design is based on WattStopper DT-300 and DT-200 Series, but subject to compliance with requirements, available manufacturers offering products that may be substituted into the Work include, but are not limited to the following:

1. Cooper Industries, Inc.
2. Hubbell Building Automation, Inc.
3. Leviton Manufacturing Co., Inc.
4. Lithonia Lighting; Acuity Brands Lighting, Inc.
5. Lutron Electronics Co., Inc.
6. Philips Lighting Controls.
7. Sensor Switch, Inc.

B. General Requirements for Sensors:

1. Wall and Ceiling-mounted, solid-state indoor occupancy and vacancy sensors.
2. Dual technology (passive infrared and ultrasonic).
3. Separate power pack, unless installed on gyp. board ceilings or walls.
4. Hardwired (line or low-voltage) connection to switch.
5. Listed and labeled as defined in NFPA 70, by a qualified testing agency, and marked for intended location and application.
6. Operation (as noted on plans):
    a. Occupancy Sensor: Unless otherwise indicated, turn lights on when coverage area is occupied, and turn them off when unoccupied; with a time delay for turning lights off, adjustable over a minimum range of 1 to 15 minutes.
    b. Vacancy Sensor: Unless otherwise indicated, lights are manually turned on and sensor turns lights off when the room is unoccupied; with a time delay for turning lights off, adjustable over a minimum range of 1 to 15 minutes.
7. Sensor Output: Sensor is powered from the power pack.
8. Power: Line voltage where installed on gyp. board ceilings or walls.
9. Power Pack: Dry contacts rated for 20A LED load at 120- and 277-V ac, for 13-A tungsten at 120-V ac, and for 1 hp at 120-V ac. Sensor

has 24-V dc, 150-mA, Class 2 power source, as defined by NFPA 70.

10. Mounting:

    a. Sensor: Suitable for mounting in any position on a standard outlet box.
    b. Relay: Externally mounted through a 1/2-inch (13-mm) knockout in a standard electrical enclosure.
    c. Time-Delay and Sensitivity Adjustments: Recessed and concealed behind hinged door.

11. Indicator: Digital display, to show when motion is detected during testing and normal operation of sensor.

12. Bypass Switch: Override the "on" function in case of sensor failure.

13. Automatic Light-Level Sensor: Adjustable from 2 to 200 fc (21.5 to 2152 lux); turn lights off when selected lighting level is present.

C. Dual-Technology Type: Wall or Ceiling mounted (as noted on plans); detect occupants in coverage area using PIR and ultrasonic detection methods. The particular technology or combination of technologies that control on-off functions is selectable in the field by operating controls on unit.

1. Sensitivity Adjustment: Separate for each sensing technology.

2. Detector Sensitivity: Detect occurrences of 6-inch- (150-mm-) minimum movement of any portion of a human body that presents a target of not less than 36 sq. in. (232 sq. cm), and detect a person of average size and weight moving not less than 12 inches (305 mm) in either a horizontal or a vertical manner at an approximate speed of 12 inches/s (305 mm/s).

3. Ceiling Mounted Detection Coverage (Standard Room): Detect occupancy anywhere within a circular area of 1000 sq. ft. (93 sq. m) when mounted on a 96-inch- (2440-mm-) high ceiling.

4. Wall Mounted Detection Coverage: Detect occupancy anywhere within a 180-degree pattern centered on the sensor over an area of 2000 square feet (220 square meters) when mounted 72 inches above finished floor.

2.04 SWITCHBOX-MOUNTED OCCUPANCY SENSORS, DUAL TECHNOLOGY

A. Manufacturers: Design is based on WattStopper DW-100 Series, but subject to compliance with requirements, available manufacturers offering

products that may be substituted into the Work include, but are not limited to the following:

1. Cooper Industries, Inc.
2. Hubbell Building Automation, Inc.
3. Leviton Manufacturing Co., Inc.
4. Lithonia Lighting; Acuity Brands Lighting, Inc.
5. Lutron Electronics Co., Inc.
6. Philips Lighting Controls.
7. Sensor Switch, Inc.

B. Description: Switchbox-mounted, combination lighting-control sensor and conventional switch lighting-control unit using dual technology (passive infrared and ultrasonic).

1. Connections: Hard wired.
2. Rated 1200 W at 120-V ac for tungsten lighting, 10 A at 120-V ac or 10 A at 277-V ac for fluorescent or LED lighting, and 1/6 hp at 120-V ac.
3. Adjustable time delay of 5 to 20 minutes.
4. Comply with NEMA WD 1, UL 20, and FS W-S-896.

2.05 DIGITAL TIMER LIGHT SWITCHES

A. Manufacturers: Design is based on WattStopper TS-400 Series, but subject to compliance with requirements, available manufacturers offering products that may be incorporated into the Work include, but are not limited to the following:

1. Cooper Industries, Inc.
2. Intermatic, Inc.
3. Invensys Controls.
4. Leviton Manufacturing Co., Inc.
5. NSi Industries LLC.

6. TE Connectivity Ltd.

7. WattStopper; a Legrand® Group brand.

B. Description: Combination digital timer and conventional switch lighting control unit. Switchbox-mounted, backlit LCD display, with selectable time interval in 10-minute increments.

1. Rated 960 W at 120-V ac for tungsten lighting, 10 A at 120-V ac or 10 amps at 277-V ac for LED, and 1/4 horsepower at 120-V ac.

2. Voltage: Dual voltage - 120 and 277 V.

3. Color: Match color of other wiring devices.

4. Faceplate: Color matched to switch.

2.06 HIGH-BAY OCCUPANCY SENSORS

A. Manufacturers: Design is based on WattStopper HBP-100 Series, but subject to compliance with requirements, available manufacturers offering products that may be substituted into the Work include, but are not limited to the following:

1. Cooper Industries, Inc.

2. Hubbell Building Automation, Inc.

3. Leviton Manufacturing Co., Inc.

4. Lithonia Lighting; Acuity Brands Lighting, Inc.

5. Lutron Electronics Co., Inc.

6. Philips Lighting Controls.

7. Sensor Switch, Inc.

B. Description:

1. Rated for indoor use.

2. Mounting heights between 15’ and 40’.

3. Adjustable time delay (15 seconds - 30 minutes; factory preset at 15 minutes).

4. Low-voltage operation with power pack, or line-voltage operation with integral power pack.

5. Operating conditions: Temperature 32-158°F (0-70°C); Humidity 20-90%, non-condensing.

C. PIR Type: Ceiling-mounted; detects occupants in the coverage area by their heat and movement.

1. Detector Sensitivity: Detect occurrences of 6-inch- (150-mm-) minimum movement of any portion of a human body that presents a target of not less than 36 sq. in. (232 sq. cm).

2. Detection Coverage: Detect occupancy anywhere in a circular area of 40-foot diameter when mounted on a 20-foot-high ceiling.

3. Detection Coverage: Detect occupancy anywhere in a circular area of 100-foot diameter when mounted on a 40-foot-high ceiling.

4. Detection Coverage: Detect occupancy anywhere in a linear area of 60-foot long when mounted on a 40-foot-high ceiling.

D. Remote Configuration Tool: Include remote configuration tool to allow for sensor setup and adjustment from the floor.

2.07 OUTDOOR MOTION SENSORS

A. Manufacturers: Subject to compliance with requirements, available manufacturers offering products that may be incorporated into the Work include, but are not limited to the following:

1. WattStopper; a Legrand® Group brand.

2. Cooper Industries, Inc.

3. Hubbell Building Automation, Inc.

4. Leviton Manufacturing Co., Inc.

5. Lithonia Lighting; Acuity Brands Lighting, Inc.

6. Sensor Switch, Inc.

B. General Requirements for Sensors: Solid-state outdoor motion sensors.

1. Listed and labeled as defined in NFPA 70, by a qualified testing agency, and marked for intended location and application.

2. PIR type, weatherproof. Detect occurrences of 6-inch- (150-mm-) minimum movement of any portion of a human body that presents a target of not less than 36 sq. in. (232 sq. cm). Comply with UL 773A.

3. Switch Rating:

   a. Luminaire-Mounted Sensor: 1000-W incandescent, 500-VA fluorescent/LED.
   b. Separately Mounted Sensor: Dry contacts rated for 20-A ballast load at 120- and 277-V ac, for 13-A tungsten at 120-V ac, and for 1 hp at 120-V ac. Sensor has 24-V dc, 150-mA, Class 2 power source, as defined by NFPA 70.

4. Switch Type: SP. with bypass switch to override the "on" function in case of sensor failure.

5. Voltage: Match the circuit voltage.

6. Detector Coverage:

   a. Standard Range: 210-degree field of view, with a minimum coverage area of 900 sq. ft. (84 sq. m).
   b. Long Range: 180-degree field of view and 110-foot (34-m) detection range.

7. Ambient-Light Override: Concealed, field-adjustable, light-level sensor from 10 to 150 fc (108 to 1600 lux). The switch prevents the lights from turning on when the light level is higher than the set point of the sensor.

8. Concealed, field-adjustable, "off" time-delay selector at up to 30 minutes.

9. Adaptive Technology: Self-adjusting circuitry detects and memorizes usage patterns of the space and help eliminate false "off" switching.

10. Operating Ambient Conditions: Suitable for operation in ambient temperatures ranging from minus 40 to plus 130 deg F (minus 40 to plus 54 deg C), rated as "raintight" according to UL 773A.

C. Remote Configuration Tool: For any motion sensors mounted on poles or walls at more than 10-feet above grade, include remote configuration tool to allow for sensor setup and adjustment from the ground.

2.08 LIGHTING CONTACTORS

A. Manufacturers: Design is based on ASCO 918 Series, but subject to compliance with requirements, available manufacturers offering products that may be incorporated into the Work include, but are not limited to the following:

1. Allen-Bradley/Rockwell Automation.

2. ASCO.

3. Eaton.

4. General Electric Company.

5. Square D.

B. Description: Electrically operated and mechanically held, complying with NEMA ICS 2 and UL 508.

1. Current Rating for Switching: Listing or rating consistent with type of load served, including tungsten filament, inductive, and high-inrush ballast (ballast with 15 percent or less THD of normal load current).

2. Fault Current Withstand Rating: Equal to or exceeding the available fault current at the point of installation.

3. Enclosure: Comply with NEMA 250.

4. Provide with Hand-Off-Auto switch and pilot devices as indicated on Drawings, matching the NEMA type specified for the enclosure.

5. Provide solid-state control module as required for 2 or 3 wire control.

2.09 LIGHTING CONTROL RELAY PANEL

A. Manufacturers: Design is based on WattStopper LC8 Series, but subject to compliance with requirements, available manufacturers offering products that may be incorporated into the Work include, but are not limited to the following:

1. Acuity Controls.

2. Crestron

3. Hubbell Automation.

4. Leviton.

B. Panel description:

1. UL Listed with 14,000 SCCR.

2. Enclosure: NEMA 1 rated with hinged, lockable, surface or flush cover (as shown on plans).

3. Interior: Barrier for separation of high voltage (class 1) and low voltage (class 2) wiring.

4. Relays: Up to (8) single-pole or (4) two-pole relays. Relays shall be electrically held relays with auxiliary contacts for pilot light switching. SPST and DPST relays with 20A contact ratings for:

   a. Light fixture ballasts/drivers.
   b. General purpose loads.
   c. 1/2 HP motor at 120V.
   d. 1 HP motor at 208, 240 or 480V.

5. Back-lit Touchscreen User Interface:

   a. Timeclock with 8 Channels of time control, up to 42 holidays and automatic daylight savings adjustment.
   b. Non-volatile program memory to retain time keeping during power outages for at least 48 hours.

C. External Control device interface:

1. 8 universal switch inputs that are low voltage, self-configuring and do not require programming to accept momentary on/ momentary off switch, push button switch (cycling), maintained switch or 24VDC signals from occupancy sensors, photocells or other interfacing devices.

2. After-hour interior lighting shut off control shall provide a full duration override time of 1 to 240 minutes with a warning blink five minutes prior to shutting the lighting off. An impending shut off will be cancelled and the override period re-initialized by pressing the automatic control switch push button (WattStopper No. AS-100 or equivalent).

3. Control exterior lighting via photocell input (do not use astronomical clock function).

2.10 CONDUCTORS AND CABLES

A. Power Wiring to Supply Side of Remote-Control Power Sources: Not smaller than No. 12 AWG. Comply with requirements in Section 260519 "Low-Voltage Electrical Power Conductors and Cables."

B. Classes 2 and 3 Control Cable: Multi-conductor cable with stranded-copper conductors not smaller than No. 18 AWG. Comply with requirements in Section 260519 "Low-Voltage Electrical Power Conductors and Cables." Consult manufacturer for Class 2 wiring requirements. Provide in a separate raceway if manufacturer does not allow cabling shared with Class 1 cabling.

C. Class 1 Control Cable: Multi-conductor cable with stranded-copper conductors not smaller than No. 14 AWG. Comply with requirements in Section 260519 "Low-Voltage Electrical Power Conductors and Cables."

PART 3 EXECUTION

3.01 DEVICE LOCATIONS

A. Device locations on plan drawings are approximate and are intended to indicate general area to be covered.

1. All devices shall be installed in strict accordance with manufacturer's guidelines.

2. Contractor shall provide additional devices and associated hardware as required to cover the entire area.

3. Occupancy sensor locations shall be shifted as necessary to ensure the following:

a. Normal devices shall be installed only no higher than 120" AFF.
b. No device employing PIR sensing shall be installed in a location where obstacles may block the sensor's field of view.
c. Any device employing ultrasonic sensing shall be installed at a minimum of 6' away from any strong transfer of air such as supply diffusers.

3.02 INSTALLATION

A. Comply with NECA 1.

B. Examine all lighting control devices before installation. Reject lighting control devices that are wet, moisture damaged, or mold damaged.

C. Coordinate layout and installation of ceiling-mounted devices with other construction that penetrates ceilings or is supported by them, including light fixtures, HVAC equipment, smoke detectors, fire-suppression systems, and partition assemblies.

D. Install and aim sensors in locations to achieve not less than 90-percent coverage of areas indicated. Do not exceed coverage limits specified in manufacturer's written instructions.

E. Mount electrically held lighting contactors with elastomeric isolator pads to eliminate structure-borne vibration unless contactors are installed in an enclosure with factory-installed vibration isolators.

F. Provide detailed point to point wiring diagrams for every termination. Provide wire specifications and wire colors to simplify contactor termination requirements

G. Install the work of this Section in accordance with manufacturer’s printed instructions unless otherwise indicated.

H. Calibrate all sensor time delays and sensitivity to guarantee proper detection of occupants and energy savings.

1. Adjust time delay so that controlled area remains lighted for 5 minutes after occupant leaves area.

I. Provide written or computer-generated documentation on the commissioning of the system including room by room description including:

1. Sensor parameters, time delays and sensitivities.

2. Sequence of operation, (e.g. manual ON, Auto OFF. etc.)

3. Load Parameters (e.g. blink warning, etc.)

3.03 WIRING

A. In general, all devices and equipment shall be wired in accordance with manufacturer’s guidelines. Wireless devices shall only be used if specifically approved in writing by the Engineer.

B. Wiring Method: Comply with Section 26 05 19 "Low-Voltage Electrical Power Conductors and Cables." Minimum conduit size is 3/4 inch.

C. Low voltage cables do not require raceway where concealed in accessible ceilings. Cabling shall be cleanly organized and supported by J-Hooks or approved methods every 6 feet.

D. Low voltage cables shall be installed in conduit/raceway where exposed.

E. Wiring within Enclosures: Separate power-limited and nonpower-limited conductors according to conductor manufacturer's written instructions.

F. Size conductors according to lighting control device manufacturer's written instructions unless otherwise indicated.

G. Splices, Taps, and Terminations: Make connections only on numbered terminal strips in junction, pull, and outlet boxes; terminal cabinets; and equipment enclosures.

3.04 IDENTIFICATION

A. Identify components and power and control wiring according to Section 260553 "Identification for Electrical Systems."

1. Identify controlled circuits in lighting contactors.

2. Identify circuits or luminaires controlled by photoelectric and occupancy sensors at each sensor.

B. Label time switches and contactors with a unique designation.

3.05 FIELD QUALITY CONTROL

A. Perform the following tests and inspections:

1. Operational Test: After installing time switches and sensors, and after electrical circuitry has been energized, start units to confirm proper unit operation.

2. Test and adjust controls and safeties. Replace damaged and malfunctioning controls and equipment.

B. Lighting control devices will be considered defective if they do not pass tests and inspections.

C. Prepare test and inspection reports.

3.06 ADJUSTING

A. Occupancy Adjustments: When requested within 12 months from date of Substantial Completion, provide on-site assistance in adjusting lighting control devices to suit actual occupied conditions. Provide up to two visits to Project during other-than-normal occupancy hours for this purpose.

1. For occupancy and motion sensors, verify operation at outer limits of detector range. Set time delay to suit Owner's operations.

2. For daylighting controls, adjust set points and deadband controls to suit Owner's operations.

3. Align high-bay occupancy sensors using manufacturer's laser aiming tool.

3.07 DEMONSTRATION

A. Train Owner's maintenance personnel to adjust, operate, and maintain lighting control devices.

END OF SECTION 26 09 23

(This page intentionally left blank)

DIVISION 26 00 00 – ELECTRICAL

PART 1 GENERAL

1.01 SUMMARY

A. Section includes distribution, dry-type transformers with a nominal primary and secondary rating of 600 V and less, with capacities up to 1500 kVA.

1.02 ACTION SUBMITTALS

A. Product Data: For each type of product.

B. Shop Drawings:

1. Detail equipment assemblies and indicate dimensions, weights, loads, required clearances, method of field assembly, components, and location and size of each field connection.

2. Vibration Isolation Base Details: Detail fabrication including anchorages and attachments to structure and to supported equipment.

3. Include diagrams for power, signal, and control wiring.

1.03 INFORMATIONAL SUBMITTALS

A. Seismic Qualification Data: Certificates, for transformers, accessories, and components, from manufacturer.

B. Source quality-control reports.

C. Field quality-control reports.

1.04 CLOSEOUT SUBMITTALS

A. Operation and maintenance data.

1.05 QUALITY ASSURANCE

A. Electrical Components, Devices, and Accessories: Listed and labeled as defined in NFPA 70, Article 100, by a testing agency acceptable to authorities having jurisdiction, and marked for intended use.

B. Comply with IEEE C57.12.91, "Test Code for Dry-Type Distribution and Power Transformers."

1.06 DELIVERY, STORAGE, AND HANDLING

A. Temporary Heating: Apply temporary heat according to manufacturer's written instructions within the enclosure of each ventilated-type unit, throughout periods during which equipment is not energized and when transformer is not in a space that is continuously under normal control of temperature and humidity.

1.07 COORDINATION

A. Coordinate size and location of concrete bases with actual transformer provided. Cast anchor-bolt inserts into bases. Concrete, reinforcement, and formwork requirements are specified with concrete.

B. Coordinate installation of wall-mounting and structure-hanging supports with actual transformer provided.

PART 2 PRODUCTS

2.01 MANUFACTURERS

A. Manufacturers: Subject to compliance with requirements, available manufacturers offering products that may be incorporated into the Work include, but are not limited to the following:

1. Eaton.

2. Square D; by Schneider Electric.

3. General Electric Company.

4. Tierney Electrical Manufacturing Co.

2.02 PERFORMANCE REQUIREMENTS

A. Seismic Performance: Transformers shall withstand the effects of earthquake motions determined according to ASCE/SEI 7.

1. The term "withstand" means "the transformer will remain in place without separation of any parts when subjected to the seismic forces specified and the transformer will be fully operational after the seismic event."

2.03 GENERAL TRANSFORMER REQUIREMENTS

A. Description: Factory-assembled and -tested, air-cooled units for 60-Hz service.

B. Comply with NFPA 70.

1. Electrical Components, Devices, and Accessories: Listed and labeled as defined in NFPA 70, by a qualified testing agency, and marked for intended location and use.

C. Transformers Rated 15 kVA and Larger:

1. Comply with 10 CFR 431 (DOE 2016) efficiency levels.

2. Marked as compliant with DOE 2016 efficiency levels by an NRTL.

D. Encapsulation: Transformers smaller than 30 kVA shall have core and coils completely resin encapsulated.

E. Cores: Electrical grade, non-aging silicon steel with high permeability and low hysteresis losses.

F. Coils: Continuous windings except for taps.

1. Coil Material: Copper or Aluminum.

2. Internal Coil Connections: Brazed or pressure type.

3. Terminal Connections: Welded.

G. Shipping Restraints: Paint or otherwise color-code bolts, wedges, blocks, and other restraints that are to be removed after installation and before energizing. Use fluorescent colors that are easily identifiable inside the transformer enclosure.

2.04 DISTRIBUTION TRANSFORMERS

A. Comply with NFPA 70.

B. Provide transformers that are constructed to withstand seismic forces specified in Section 26 05 48.16 "Seismic Controls for Electrical Systems."

C. Cores: One leg per phase.

D. Indoor Enclosure: Ventilated.

1. NEMA 250, Type 2: Core and coil shall be encapsulated within resin compound to seal out moisture and air.

2. KVA Ratings: Based on convection cooling only and not relying on auxiliary fans.

3. Wiring Compartment: Sized for conduit entry and wiring installation.

E. Outdoor Enclosure: Ventilated.

1. NEMA 250, Type 3R: Core and coil shall be encapsulated within resin compound, sealing out moisture and air.

2. KVA Ratings: Based on convection cooling only and not relying on auxiliary fans.

3. Wiring Compartment: Sized for conduit entry and wiring installation.

F. Taps for Transformers 3 kVA and Smaller: One 5 percent tap above normal full capacity.

G. Taps for Transformers 7.5 to 24 kVA: Two 5 percent taps below rated voltage.

H. Taps for Transformers 25 kVA and Larger: Two 2.5 percent taps above and two 2.5 percent taps below normal full capacity.

I. Insulation Class, Smaller than 30 kVA: 180 deg C, UL-component-recognized insulation system with a maximum of 115 deg C rise above 40 deg C ambient temperature.

J. Insulation Class, 30 kVA and Larger: 220 deg C, UL-component-recognized insulation system with a maximum of 115 deg C rise above 40 deg C ambient temperature.

K. Grounding: Provide ground-bar kit or a ground bar installed on the inside of the transformer enclosure.

L. Wall Brackets: Manufacturer's standard brackets.

M. Low-Sound-Level Requirements: Comply with NEMA ST 20 standard sound levels when factory tested according to IEEE C57.12.91.

2.05 IDENTIFICATION

A. Nameplates: Engraved, laminated-acrylic or melamine plastic signs for each distribution transformer, mounted with corrosion-resistant screws. Nameplates and label products are specified in Section 260553 "Identification for Electrical Systems."

PART 3 EXECUTION

3.01 EXAMINATION

A. Examine conditions for compliance with enclosure- and ambient-temperature requirements for each transformer.

B. Verify that field measurements are as needed to maintain working clearances required by NFPA 70 and manufacturer's written instructions.

C. Examine walls, floors, roofs, and concrete bases for suitable mounting conditions where transformers will be installed.

D. Verify that ground connections are in place and requirements in Section 260526 "Grounding and Bonding for Electrical Systems" have been met. Maximum ground resistance shall be 5 ohms at location of transformer.

E. Environment: Enclosures shall be rated for the environment in which they are located. Covers for NEMA 250, Type 4X enclosures shall not cause accessibility problems.

3.02 INSTALLATION

A. Install wall-mounted transformers level and plumb with wall brackets fabricated by transformer manufacturer.

1. Coordinate installation of wall-mounted and structure-hanging supports with actual transformer provided.

B. Install transformers level and plumb on a concrete base with vibration-dampening supports. Locate transformers away from corners and not parallel to adjacent wall surface.

C. Construct concrete bases and anchor floor-mounted transformers according to manufacturer's written instructions, requirements in Section 26 05 29 "Hangers and Supports for Electrical Systems" and Section 26 05 48.16 “Seismic Controls for Electrical Systems.”

1. Coordinate size and location of concrete bases with actual transformer provided. Cast anchor-bolt inserts into bases. Concrete, reinforcement, and formwork requirements are specified with concrete.

D. Secure transformer to concrete base according to manufacturer's written instructions.

E. Secure covers to enclosure and tighten all bolts to manufacturer-recommended torques to reduce noise generation.

F. Remove shipping bolts, blocking, and wedges.

3.03 CONNECTIONS

A. Ground equipment according to Section 260526 "Grounding and Bonding for Electrical Systems."

B. Connect wiring according to Section 260519 "Low-Voltage Electrical Power Conductors and Cables."

C. Tighten electrical connectors and terminals according to manufacturer's published torque-tightening values. If manufacturer's torque values are not indicated, use those specified in UL 486A-486B.

D. Provide flexible connections at all conduit and conductor terminations and supports to eliminate sound and vibration transmission to the building structure.

3.04 FIELD QUALITY CONTROL

A. Perform tests and inspections.

B. Small (Up to 167-kVA Single-Phase or 500-kVA Three-Phase) Dry-Type Transformer Field Tests:

1. Visual and Mechanical Inspection.

a. Inspect physical and mechanical condition.
b. Inspect anchorage, alignment, and grounding.
c. Verify that resilient mounts are free and that any shipping brackets have been removed.
d. Verify the unit is clean.
e. Perform specific inspections and mechanical tests recommended by manufacturer.

2. Electrical Tests:

a. Measure resistance at each winding, tap, and bolted connection.
b. Verify correct secondary voltage, phase-to-phase and phase-to-neutral, after energization and prior to loading.

C. Remove and replace units that do not pass tests or inspections and retest as specified above.

D. Test Labeling: On completion of satisfactory testing of each unit, attach a dated and signed "Satisfactory Test" label to tested component.

3.05 ADJUSTING

A. Record transformer secondary voltage at each unit for at least 48 hours of typical occupancy period. Adjust transformer taps to provide optimum voltage conditions at secondary terminals. Optimum is defined as not exceeding nameplate voltage plus 10 percent and not being lower than nameplate voltage minus 3 percent at maximum load conditions. Submit recording and tap settings as test results.

B. Output Settings Report: Prepare a written report recording output voltage and tap settings.

3.06 CLEANING

A. Vacuum dirt and debris; do not use compressed air to assist in cleaning.

END OF SECTION 26 22 13

(This page intentionally left blank)

PART 1 GENERAL

1.01 WORK INCLUDED

A. This section covers work for furnishing and installing service and distribution switchboards rated 600 Volts and less, as shown on the Drawings for this project, complete. This section also includes:

1. Instrumentation.

2. Control power.

3. Accessory components and features.

1.02 GENERAL REQUIREMENTS

A. Also see the GENERAL CONDITIONS, Division 01 00 00, GENERAL REQUIREMENTS, and Section 26 00 10, GENERAL ELECTRICAL REQUIREMENTS which contain information and requirements that apply to the work specified herein and are mandatory for this project.

B. Like items of equipment or materials provided hereunder shall be the end products of one manufacturer to achieve standardization for appearance, maintenance, and replacement, and shall include all necessary appurtenances for a complete and working system. The equipment or materials shall be the product of a manufacturer regularly engaged in the production of equipment or materials for the specified use. The manufacturer shall have the sole responsibility for the proper functioning and coordination of the equipment or materials as furnished.

C. The Contractor or their sub-contractors shall provide all required miscellaneous equipment and materials, as shown on the Drawings and in accordance with these Specifications. The Contractor or their sub-contractors shall furnish all equipment and material items, whether specified or not, as necessary to provide a complete, operable electrical system.

1.03 DEFINITIONS

A. EMI: Electromagnetic interference.

B. GFCI: Ground fault circuit interrupter.

C. OCPD: Overcurrent protective device.

D. MCCB: Molded case circuit breaker.

E. ICCB: Insulated case circuit breaker.

F. SPD: Surge protective device.

G. NRTL: Nationally Recognized Testing Laboratory.

1.04 SUBMITTALS

A. Submittals shall be provided as specified in Section 01 33 00, SUBMITTALS and Section 26 00 10, GENERAL ELECTRICAL REQUIREMENTS.

B. Submit product data for each switchboard, overcurrent protective device, surge protective device, ground fault protector, accessory, and component used on this project.

C. Shop Drawings: Provide shop drawings for each switchboard and related equipment.

1. Include dimensioned plans, elevations, sections, and details, including required clearances and service space around equipment. Show tabulations of installed devices, equipment features, and ratings.

2. Enclosure types for types other than NEMA 250, Type 1.

3. Bus configuration, current, and voltage ratings.

4. Short circuit current rating of switchboards and all individual overcurrent protective devices.

5. Current limitation curves and time-current coordination curves for each type and rating of overcurrent protective device.

6. Time-current coordination curves for each type and rating of overcurrent protective device included in switchboards.

7. Provisions for tenant metering.

8. Detail utility company's metering provisions with indication of approval by utility company.

9. Include schematic and wiring diagrams for power, signal, and control wiring.

D. Seismic Qualification Certificates: Provide certificates for switchboards, overcurrent protective devices, accessories, and components, from the manufacturer.

1. Basis for Certification: Indicate whether the “withstand” certification is based on actual test of assembled components or on calculation.

2. Dimensioned Outline Drawings of Equipment Unit: Identify center of gravity and locate and describe mounting and anchorage provisions.

3. Provide detailed description of equipment anchorage devices on which the certification is based and their installation requirements.

E. Provide copies of all field quality control reports.

1. Include record of performance testing for ground fault breakers in accordance with NEC 230.95 (C).

F. Provide all required operation and maintenance data.

1. Manufacturer's written instructions for testing and adjusting overcurrent protective devices.

2. Field settings for all adjustable overcurrent protective devices.

1.05 QUALITY ASSURANCE

A. Electrical Components, Devices, and Accessories: Listed and labeled as defined in NFPA 70, National Electrical Code by a qualified testing agency, and marked for intended location and application.

B. Comply with NEMA PB 2, Deadfront Distribution Switchboards.

C. Installer Qualifications: Workers qualified as defined in NEMA PB 2.1; General Instructions for Proper Handling, Installation, Operation, and Maintenance of Dead Front Distribution Switchboards Rated 600 Volts or Less; and trained in electrical safety as required by NFPA 70E.

D. Testing Agency Qualifications: Accredited by NETA ATS, Acceptance Testing Specifications for Electrical Power Distribution Equipment and Systems.

1. Testing Agency's Field Supervisor: Certified by NETA to supervise on-site testing.

1.06 FIELD CONDITIONS

A. Installation Pathway: Remove and replace access fencing, doors, lift-out panels, and structures as necessary to provide pathway for moving switchboards into place. Coordinate all work with the Contractor.

B. Environmental Limitations:

1. Do not deliver or install switchboards until spaces are enclosed and weathertight, wet work in spaces is complete and dry, work above switchboards is complete, and temporary HVAC system is operating and maintaining ambient temperature and humidity conditions at occupancy levels during the remainder of the construction period.

2. Rate equipment for continuous operation under the following conditions unless otherwise indicated:

a. Indoor Ambient Temperature: Between 50 degrees F to plus 90 degrees F.
b. Altitude: Not exceeding 550 feet.

C. Service Conditions: NEMA PB 2.1, usual service conditions, or as noted above.

D. Interruption of Existing Electric Service: Do not interrupt electric service to facilities occupied by the Owner or others unless permitted under the following conditions and then only after arranging to provide temporary electric service according to the requirements indicated:

1. Notify the Engineer and the Owner no fewer than 10 days in advance of proposed interruption of electric service.

2. Indicate method of providing temporary electric service.

3. Do not proceed with interruption of electric service without the Owner's written permission.

1.07 COORDINATION

A. Coordinate layout and installation of switchboards and components with other construction that penetrates walls or is supported by them, including electrical and other types of equipment, raceways, piping, ductwork, encumbrances to workspace clearance requirements, and adjacent surfaces. Maintain required workspace clearances and required clearances for equipment access doors and panels in accordance with NEC 110.26.

B. Coordinate size and location of concrete bases. Cast anchor bolt inserts into bases. Concrete, reinforcement, and formwork requirements are specified in Division 03 00 00, CONCRETE.

1.08 WARRANTY

A. Manufacturer's Warranty: Manufacturer agrees to repair or replace switchboard enclosures, buswork, overcurrent protective devices, accessories, and factory installed interconnection wiring that fail in materials or workmanship within the specified warranty period.

1. Warranty Period: 24 Months from the date of Substantial Completion.

PART 2 PRODUCTS

2.01 PERFORMANCE REQUIREMENTS

A. Seismic Performance: Fabricate and test switchboards according to IEEE 344 to withstand the seismic forces as defined in Section 25 05 48, SEISMIC CONTROLS FOR ELECTRICAL SYSTEMS.

1. Basis for Certification: Indicate whether “withstand” certification is based on an actual test of assembled components or on calculation. Shake table testing shall comply with ICC-ES AC156.

2. The term "withstand" means "the unit will remain in place without separation of any parts when subjected to the seismic forces specified and the unit will be fully operational after the seismic event”.

2.02 SWITCHBOARDS

A. Manufacturers: Subject to compliance with these requirements, available manufacturers offering products that may be incorporated into the work include, but are not limited to the following:

1. Square D; by Schneider Electric.

2. Eaton Corporation.

3. ABB/U.S. Electrification.

4. Or equal.

B. Source Limitations: Obtain switchboards, overcurrent protective devices, components, and accessories from a single source from a single manufacturer.

C. Comply with NEMA PB 2.

D. Comply with NFPA 70.

E. Comply with UL 891.

F. Non-compartmentalized construction with provision for fixed mounted MCCBs.

G. Rated to withstand short circuit condition of 3 cycles.

H. Up to 6,000 Amp frame size.

I. Front Connected, Front Accessible Switchboards:

1. Main Devices: Fixed, individually mounted.

2. Branch Devices: Panel mounted.

3. Sections front and rear aligned.

J. Nominal System Voltage: See the Drawings.

K. Main Bus Continuous Amperage Rating: See the Drawings.

L. Indoor Enclosures: Steel, NEMA 250, Type 1.

1. Finish: Factory applied finish in manufacturer's standard gray finish over a rust inhibiting primer on treated metal surface.

M. Outdoor Enclosures: Steel, NEMA 250, Type 3R.

1. Finish: Factory applied finish in manufacturer's standard color; undersurfaces treated with corrosion resistant undercoating.

2. Enclosure: Downward, rearward sloping roof with front access only and provisions for padlocking.

N. Service Entrance Rating: Switchboards intended for use as service entrance equipment shall contain from one to six service disconnecting means with overcurrent protection, a neutral bus with disconnecting link, a grounding electrode conductor terminal, and a main bonding jumper.

O. Utility Metering Compartment: Barrier compartment and section complying with utility company's requirements; hinged sealable door; buses provisioned for mounting utility company's current transformers and potential transformers or potential taps as required by the utility company. If separate vertical section is required for utility metering, match and align with basic switchboard. Provide service entrance label and necessary applicable service entrance features.

P. Bus Transition and Incoming Pull Sections: Matched and aligned with basic switchboard.

S. Barriers: Between adjacent switchboard sections.

T. Hinged Front Panels: Allow access to circuit breaker, metering, accessory, and blank compartments.

U. Buses and Connections: Three phase, four wire unless otherwise indicated.

1. Provide phase bus arrangement A, B, C from front to back, top to bottom, and left to right when viewed from the front of the switchboard.

2. Conductor Connectors: Suitable for use with conductor material, quantity and sizes. Refer to the Feeder Schedule on the Drawings.

3. Phase-Bus and Neutral-Bus Material: Hard-drawn copper of 98 percent minimum conductivity.

4. Ground Bus: Minimum size required by UL 891, hard-drawn copper of 98 percent conductivity, equipped with mechanical connectors for feeder and branch circuit ground conductors.

5. Main Phase Buses and Equipment Ground Buses: Uniform capacity for entire length of switchboard's main and distribution sections. Provide for future extensions from both ends.

6. Disconnect Links:

a. Isolate neutral bus from incoming neutral conductors.
b. Bond neutral bus to equipment-ground bus for switchboards utilized as service equipment or separately derived systems.

7. Neutral Buses: 100 percent of the ampacity of phase buses unless otherwise indicated, equipped with mechanical connectors for outgoing circuit neutral cables. Brace bus extensions for busway feeder neutral bus.

V. Future Devices: Equip compartments with mounting brackets, supports, bus connections, and appurtenances at full rating of circuit breaker compartment.

2.03 DISCONNECTING AND OVERCURRENT PROTECTIVE DEVICES

A. All OCPDs shall be fully rated for available fault current. No series ratings will be allowed.

B. Manufacturers: Breakers shall be manufactured by the same manufacturer as the switchboard in which they are installed.

C. Branch Overcurrent Protective Devices: Bolt-on circuit breakers or plug-in circuit breakers where individual positive locking device requires mechanical release for removal. Replaceable without disturbing adjacent units.

2.04 CIRCUIT BREAKERS

A. General Requirements:

1. Breakers shall meet current NEMA and UL specifications as applicable to frame size, standard rating, and interrupting capability.

2. Breakers shall be one-pole, two-pole, or three-pole as scheduled. Operate manually for normal ON-OFF switching and automatically, under overload and short circuit conditions.

3. The operating handle shall open and close all poles simultaneously on multi-pole breakers. The operating mechanism shall be trip-free so that contacts cannot be held closed against abnormal overcurrent or short circuit conditions. Do not use single-pole circuit breakers with handle ties where multi-pole breakers are indicated on the switchboard schedule or where required for poly-phase loads.

4. Breakers shall be of the type noted on switchboard schedule (shunt-trip, GFCI, arc-fault, etc.) or as required by the equipment being provided.

5. Breakers noted as GFI protected for equipment shall have a 30mA or greater trip.

6. Breakers noted as GFI protected for personnel shall have a 6mA trip.

7. A control transformer with primary and secondary fusing shall be provided as required for control of shunt-trip breakers.

B. Molded Case Circuit Breaker (MCCB): Comply with UL 489, with interrupting capacity to meet available fault currents.

1. Molded case circuit breakers shall be bolt-on type only and suitable for individual as well as switchboard mounting. No breakers designated as "plug-on" type are allowed unless specifically noted on the Drawings.

2. Thermal Magnetic Circuit Breakers:

a. Inverse time-current element for low level overloads.
b. Instantaneous magnetic trip element for short circuits.

c. Adjustable magnetic trip setting for circuit breaker frame sizes 250 Amp and larger.

3. Adjustable Instantaneous Trip Circuit Breakers: Magnetic trip element with front mounted, field adjustable trip setting.

4. Electronic trip circuit breakers with rms sensing; field replaceable rating plug or field replicable electronic trip; and the following field adjustable settings (LSIG):

   a. Instantaneous trip.
   b. Long time and short time pickup levels.
   c. Long and short time adjustments.
   d. Ground fault pickup level, time delay, and I^2t response.

5. Current Limiting Circuit Breakers: Frame sizes 400 Amp and smaller; let-through ratings less than NEMA FU 1, RK-5.

6. GFCI Circuit Breakers: Single-pole and double-pole configurations with Class A ground fault protection (6-mA trip).

7. GFEP Circuit Breakers: Class B ground fault protection (30-mA trip).

8. Arc Fault Circuit Interrupter Circuit Breakers: Comply with UL 1699; 120/240-Volt, single-pole configuration.

9. Subfeed Circuit Breakers: Vertically mounted.

10. MCCB Features and Accessories:

NTS: Edit the following list to suit specific project needs. Non-bolded items are typical for most of our projects. Bolded items are not as typical, but may apply to some projects.

   a. Standard frame sizes, trip ratings, and number of poles.
   b. Breaker handle shall indicate tripped status.
   c. UL listed for reverse connection without restrictive line or load ratings.
   d. Lugs: Mechanical style, suitable for number, size, trip ratings, and conductor materials.
   e. Application Listing: Appropriate for application; Type SWD for switching fluorescent lighting loads; Type HID for feeding fluorescent and HID lighting circuits.
   f. Ground Fault Protection: Integrally mounted relay and trip unit with adjustable pickup and time delay settings, push-to-test feature, and ground fault indicator.
   g. Provide arc fault reduction switching with local status indicator on the main and any other breakers with 1200 Amp or greater

frame (that can be adjusted to 1200 Amp or higher) in accordance with NEC 240.87.

h. Handle Padlocking Device: Fixed attachment, for locking circuit breaker handle in on or off position.

2.05 SURGE PROTECTION DEVICES

A. Surge protection devices shall be as specified in Section 26 43 13, SURGE PROTECTION FOR LOW VOLTAGE POWER CIRCUITS.

2.06 INSTRUMENTATION

A. Instrument Transformers: NEMA EI 21.1, IEEE C57.13, and the following:

1. Potential Transformers: Secondary voltage rating of 120 Volts and NEMA accuracy class of 0.3 with burdens of W, X, and Y.

2. Current Transformers: Ratios shall be as indicated with accuracy class and burden suitable for connected relays, meters, and instruments.

3. Control Power Transformers: Dry type, mounted in separate compartments for units larger than 3 kV.

4. Current Transformers for Neutral and Ground Fault Current Sensing: Connect secondaries to ground overcurrent relays to provide selective tripping of main and tie circuit breaker. Coordinate with feeder circuit breaker ground fault protection.

B. Multifunction Digital Metering Monitor: Microprocessor based unit suitable for three-wire or four-wire systems and with the following features:

1. Switch selectable digital display of the following values with maximum accuracy tolerances as indicated:

a. Phase Currents, Each Phase: Plus or minus 1 percent.
b. Phase-to-Phase Voltages, Three Phase: Plus or minus 1 percent.
c. Phase-to-Neutral Voltages, Three Phase: Plus or minus 1 percent.
d. Megawatts: Plus or minus 2 percent.
e. Megavars: Plus or minus 2 percent.
f. Power Factor: Plus or minus 2 percent.
g. Frequency: Plus or minus 0.5 percent.
h. Megawatt Demand: Plus or minus 2 percent; demand interval programmable from 5 to 60 minutes.

i. Accumulated Energy, Megawatt Hours: Plus or minus 2 percent. Accumulated values unaffected by power outages up to 72 hours.

2. Mounting: Display and control unit flush or semi-flush mounted in instrument compartment door.

3. Digital Metering Monitor to be Ethernet/IP capable for reporting to the SCADA system.

C. Ammeters, Voltmeters, and Power Factor Meters: ANSI C39.1, direct reading, full range.

1. Meters: 4-inch diameter or 6 inches square, flush or semi-flush, with anti-parallax 250-degree scales and external zero adjustment.

2. Voltmeters: Cover an expanded-scale range of nominal voltage plus 10 percent.

D. Instrument Switches: Rotary type with off position.

1. Voltmeter Switches: Permit reading of all phase-to-phase voltages and, where a neutral is indicated, phase-to-neutral voltages.

2. Ammeter Switches: Permit reading of current in each phase and maintain current-transformer secondaries in a closed circuit condition at all times.

E. Feeder Ammeters: 2-1/2-inch minimum size with 90-degree or 120-degree scale. Meter and transfer device with an off position, located on overcurrent device door for indicated feeder circuits only.

F. Watt Hour Meters: Flush or semi-flush type, rated 5 Amp, 120 Volt, 3 phase, 3 wire, with 3 elements, 15-minute indicating demand register, and provision for testing and adding pulse initiation.

G. Recording Demand Meter: Usable as totalizing relay or as indicating and recording maximum demand meter with 15-minute interval. Meter shall count and control a succession of pulses entering two channels. House in drawout, back-connected case arranged for semi-flush mounting.

H. Provide Ethernet Communications at switchboard for monitoring statuses.

2.07 CONTROL POWER

A. Control Circuits: 20 Volt, supplied through secondary disconnecting devices from control power transformer.

B. Electrically Interlocked Main and Tie Circuit Breakers: Two control power transformers in separate compartments, with interlocking relays, connected to the primary side of each control power transformer at the line side of the associated main circuit breaker. 120 Volt secondaries shall be connected through automatic transfer relays to ensure a fail-safe automatic transfer scheme.

C. Control Power Fuses: Primary and secondary fuses for current-limiting and overload protection of transformer and fuses for protection of control circuits.

D. Control Wiring: Factory installed, with bundling, lacing, and protection included. Provide flexible conductors for No. 8 AWG and smaller, for conductors across hinges, and for conductors for interconnections between shipping units.

2.08 ACCESSORY COMPONENTS AND FEATURES

A. Mounting Accessories: Comply with the requirements in Section 26 05 48, SEISMIC CONTROLS FOR ELECTRICAL SYSTEMS or the manufacturer's instructions for anchors, mounting channels, bolts, washers, and other mounting accessories.

B. Furnish accessory set including tools and miscellaneous items required for overcurrent protective device test, inspection, maintenance, and operation.

2.09 IDENTIFICATION

A. Service Equipment Label: NRTL labeled for use as service equipment for switchboards (as applicable) with one or more service disconnecting and overcurrent protective devices.

B. Breaker Labels: Faceplate shall list current rating, UL and IEC certification standards, and AIC rating.

2.10 MAINTENANCE MATERIALS

A. Furnish extra materials that match products installed and that are packaged with protective covering for storage and identified with labels describing the contents.

1. Keys: Two spares for each type of switchboard enclosure lock.

2. Potential Transformer Fuses: Equal to 10 percent of the amount installed for each size and type, but no fewer than 2 of each size and type.

3. Control Power Fuses: Equal to 10 percent of amount installed for each size and type, but no fewer than 2 of each size and type.

4. Fuses and Fusible Devices for Fused Circuit Breakers: Equal to 10 percent of amount installed for each size and type, but no fewer than 3 of each size and type.

5. Fuses for Fused Switches: Equal to 10 percent of amount installed for each size and type, but no fewer than 3 of each size and type.

6. Fuses for Fused Power Circuit Devices: Equal to 10 percent of amount installed for each size and type, but no fewer than 3 of each size and type.

7. Indicating Lights: Equal to 10 percent of amount installed for each size and type, but no fewer than 1 of each size and type.

PART 3 EXECUTION

3.01 SOURCE QUALITY CONTROL

A. Furnish shop inspection and testing in accordance with NEMA PB 2.

3.02 DELIVERY, STORAGE, AND HANDLING

A. Deliver in sections or lengths that can be moved past obstructions in the delivery path.

B. Store indoors in clean dry space with uniform temperature to prevent condensation. Protect from exposure to dirt, fumes, water, corrosive substances, and physical damage.

C. If stored in areas subjected to weather, cover switchboards to provide protection from weather, dirt, dust, corrosive substances, and physical damage. Remove loose packing and flammable materials from inside switchboards; install electric heating (250 W per section) to prevent condensation.

D. Handle switchboards according to NEMA PB 2.1 and NECA 400.

3.03 EXAMINATION

A. Receive, inspect, handle, and store switchboards according to NECA 400 and NEMA PB 2.1.

B. Examine switchboards before installation. Reject switchboards that are damaged or rusted or have been subjected to water saturation.

C. Examine elements and surfaces to receive switchboards for compliance with installation tolerances and other conditions affecting performance of the work.

D. Examine all OCPDs before installation. Reject any that are moisture damaged or physically damaged.

E. Examine utilization equipment nameplates and installation instructions. Install OCPDs of sizes and with characteristics appropriate for each piece of equipment.

F. Proceed with installation only after unsatisfactory conditions have been corrected.

3.04 INSTALLATION

A. Comply with NECA 1, IEEE C2, and NFPA 70.

B. Install switchboards and accessories according to NECA 400 and NEMA PB 2.1.

C. Equipment Mounting:

1. Comply with mounting and anchoring requirements specified in Section 26 05 48, SEISMIC CONTROLS FOR ELECTRICAL SYSTEMS.

2. Install switchboards on a concrete base, 4-inch nominal thickness where shown on the Drawings. Comply with the requirements for concrete bases specified in the Division 03 00 00, CONCRETE specifications and details shown on the Drawings.

3. Install conduits entering underneath the switchboard, entering under the vertical section where the conductors will terminate. Install with couplings flush with the concrete base. Extend conduits 2 inches above the concrete base after the switchboard is anchored in place.

4. Prepare interface surface between slab and pad, install rebar and install dowel rods to connect concrete base to concrete floor in accordance with the details on the Drawings. Unless otherwise indicated, install dowel rods on 18-inch centers around the full perimeter of the concrete base.

5. For supported equipment, install epoxy coated anchor bolts that extend through the concrete base and anchor into the structural concrete floor.

6. Place and secure anchorage devices. Use setting drawings, templates, diagrams, instructions, and directions furnished with the items to be embedded.

7. Install anchor bolts to elevations required for proper attachment to switchboards.

8. Anchor switchboard to building structure at the top of the switchboard if required or recommended by the manufacturer.

D. Temporary Lifting Provisions: Remove temporary lifting eyes, channels, straps and brackets, and temporary blocking of moving parts from switchboard units and components.

E. Install filler plates in unused spaces of panel mounted sections.

F. Install overcurrent protective devices, surge protection devices, and instrumentation.

1. Set field adjustable switches and circuit breaker trip ranges.

2. See Section 26 05 74, ARC FLASH HAZARD STUDY for other applicable requirements.

G. Make grounding connections and bond neutral for services and separately derived systems to ground. Make connections to grounding electrodes, separate grounds for isolated ground bars, and connections to separate ground bars.

H. Ground fault breaker settings:

1. Set GF Trip Pickup at 0.5 for all Main and Branch GF breakers, unless noted otherwise.

2. Set GF Trip Delay to 0.1 for the Main breaker and to 0 or OFF for all Branch GF breakers, unless noted otherwise.

3. Set GF Trip Slope to 0 for all Main and Branch GF breakers, unless noted otherwise.

3.05 IDENTIFICATION

A. Identify field installed conductors, interconnecting wiring, and components; provide warning signs complying with the requirements for identification specified in Section 26 05 53, IDENTIFICATION FOR ELECTRICAL SYSTEMS.

B. Circuit Directory: Directory card mounted in transparent card holder, or each breaker can be labeled separately.

C. Switchboard Nameplates: Label each switchboard compartment with a nameplate complying with the requirements for identification specified in Section 26 05 53, IDENTIFICATION FOR ELECTRICAL SYSTEMS. Include: Switchboard name, voltage, amperage, number of phases and wires, source and available fault current with date calculated.

D. Device Nameplates: Label each disconnecting and overcurrent protective device and each meter and control device mounted in compartment doors with a nameplate complying with the requirements for identification specified in Section 26 05 53, IDENTIFICATION FOR ELECTRICAL SYSTEMS.

E. Operating Instructions: Frame and mount the printed basic operating instructions for switchboards, including control and key interlocking sequences and emergency procedures. Fabricate frame of finished wood or metal and cover instructions with clear acrylic plastic. Mount on front of switchboards.

F. On main distribution switchboard front, provide a laminated one-line diagram of the electrical system and all panel configurations.

3.06 FIELD QUALITY CONTROL

A. Testing Agency: Engage a qualified testing agency to perform tests and inspections.

B. Perform the following tests and inspections:

1. Acceptance:

a. Test insulation resistance for each switchboard bus, component, connecting supply, feeder, and control circuit. Open control and metering circuits within the switchboard, and remove neutral connection to surge protection and other electronic devices prior to insulation test. Reconnect after test.
b. Test continuity of each circuit.

2. Test ground fault protection of equipment in accordance with the equipment manufacturer's guidelines and prepare a written record of the test in accordance with NEC 230.95(C).

3. Correct malfunctioning units on-site where possible, and retest to demonstrate compliance; otherwise, replace with new units and retest.

4. Test and adjust controls, remote monitoring, and safeties. Replace any damaged and malfunctioning controls and equipment.

5. Test and demonstrate proper function of all shunt-trip breakers.

C. Switchboard will be considered defective if it does not pass tests and inspections.

D. Prepare test and inspection reports, including a certified report that identifies switchboards included and that describes scanning results. Include notation of deficiencies detected, remedial action taken, and observations after remedial action.

3.07 CLEANING

A. On completion of installation, inspect interior and exterior of switchboards. Remove paint splatters and other spots. Repair exposed surfaces to match original finish.

B. Vacuum clean to remove all dirt and debris; do not use compressed air to assist in cleaning.

3.08 DEMONSTRATION

A. Engage a factory authorized service representative to train the Owner's maintenance personnel:

1. How to adjust, operate, and maintain switchboards, overcurrent protective devices, instrumentation, and accessories.

2. How to set and reset arc fault reduction switches for maintenance.

END OF SECTION 26 24 13

(This page intentionally left blank)

PART 1 GENERAL

1.01 SUMMARY

A. Section Includes:

1. Distribution panelboards.

2. Lighting and appliance branch-circuit panelboards.

1.02 RELATED SECTIONS

A. Section 26 05 74 - Overcurrent Protective Device Coordination and Arc-Flash Study

B. Section 26 28 13 – Fuses

C. Section 26 43 13 - Surge Protection for Low-Voltage Electrical Power Circuits

1.03 DEFINITIONS

A. OCPD: Overcurrent protective device.

B. MCCB: Molded-case circuit breaker.

C. SPD: Surge protective device.

D. NRTL: Nationally Recognized Testing Laboratory.

1.04 ACTION SUBMITTALS

A. Product Data: For each type of panelboard, overcurrent protective device, surge protection device, ground-fault protector, accessory, and component.

B. Shop Drawings: For each panelboard and related equipment.

1. Include dimensioned plans, elevations, sections, and details.

2. Detail enclosure types including mounting and anchorage, environmental protection, knockouts, corner treatments, covers and doors, gaskets, hinges, and locks.

3. Detail bus configuration, current, and voltage ratings.

4. Short-circuit current rating of panelboards and all individual overcurrent protective devices.

5. Current limitation curves and time-current coordination curves for each type and rating of overcurrent protective device.

6. Time-current coordination curves for each type and rating of overcurrent protective device included in panelboards.

7. Schematic and wiring diagrams for power, signal, and control wiring.

C. Delegated Design Submittal:

1. For arc-flash hazard study.

2. For arc-flash labels.

1.05 INFORMATIONAL SUBMITTALS

A. Panelboard schedules for installation in panelboards.

B. Seismic Qualification Data: Certificates, for panelboards, overcurrent protective devices, accessories, and components, from manufacturer.

1. Basis for Certification: Indicate whether withstand certification is based on actual test of assembled components or on calculation.

2. Dimensioned Outline Drawings of Equipment Unit: Identify center of gravity and locate and describe mounting and anchorage provisions.

3. Detailed description of equipment anchorage devices on which the certification is based and their installation requirements.

1.06 CLOSEOUT SUBMITTALS

A. Operation and maintenance data.

1. Manufacturer's written instructions for testing and adjusting overcurrent protective devices.

2. Field settings for all adjustable overcurrent protective devices.

B. Record of performance testing for ground fault breakers in accordance with NEC 230.95(C).

1.07 MAINTENANCE MATERIAL SUBMITTALS

A. Furnish extra materials that match products installed and that are packaged with protective covering for storage and identified with labels describing contents.

1. Keys: Two (2) spares for each type of panelboard cabinet lock.

1.08 QUALITY ASSURANCE

A. Installer Qualifications: Workers qualified as defined in NEMA PB 1.1 and trained in electrical safety as required by NFPA 70E.

1.09 FIELD CONDITIONS

A. Environmental Limitations:

1. Do not deliver or install panelboards until spaces are enclosed and weathertight, wet work in spaces is complete and dry, work above panelboards is complete, and temporary HVAC system is operating and maintaining ambient temperature and humidity conditions at occupancy levels during the remainder of the construction period.

2. Rate equipment for continuous operation under the following conditions unless otherwise indicated:

a. Ambient Temperature: Not exceeding 23 deg F (minus 5 deg C) to plus 104 deg F (plus 40 deg C).
b. Altitude not exceeding 6600 feet (2000 m).

B. Service Conditions: NEMA PB 1.1, usual service conditions, as noted above.

1.10 COORDINATION

A. Coordinate layout and installation of panelboards and components with other construction that penetrates walls or is supported by them, including electrical and other types of equipment, raceways, piping, ductwork, encumbrances to workspace clearance requirements and adjacent surfaces. Maintain required workspace clearances and required clearances for equipment access doors and panels in accordance with NEC 110.26.

1.11 WARRANTY

A. Manufacturer's Warranty: Manufacturer agrees to repair or replace panelboards enclosures, buswork, overcurrent protective devices, accessories that fail in materials or workmanship within specified warranty period.

1. Panelboard Warranty Period: 2 years from date of Substantial Completion.

PART 2 PRODUCTS

2.01 PERFORMANCE REQUIREMENTS

A. Seismic Requirements: Fabricate and test panelboards according to IEEE 344 to withstand seismic forces defined in Section 26 05 48.16 "Seismic Controls for Electrical Systems."

1. The term "withstand" means "the unit will remain in place without separation of any parts from the device when subjected to the seismic forces specified and the unit will be fully operational after the seismic event."

2.02 PANELBOARDS COMMON REQUIREMENTS

A. Manufacturers: Subject to compliance with requirements, provide products by one of the following:

1. Square D by Schneider Electric.

2. Eaton Cutler-Hammer.

3. ABB/General Electric Company.

B. Source Limitations: Obtain panelboards, overcurrent protective devices, components, and accessories from single source from single manufacturer.

C. Product Selection for Restricted Space: Drawings indicate maximum dimensions for panelboards including clearances between panelboards and adjacent surfaces and other items. Comply with indicated maximum dimensions.

D. Fabricate and test panelboards according to IEEE 344 to withstand seismic forces defined in Section 26 05 48.16 "Seismic Controls for Electrical Systems."

E. Electrical Components, Devices, and Accessories: Listed and labeled as defined in NFPA 70, by a qualified testing agency, and marked for intended location and application.

F. Comply with NEMA PB 1.

G. Comply with NFPA 70.

H. Enclosures: Flush and Surface-mounted (as noted on plans), dead-front cabinets.

1. Rated for environmental conditions at installed location.

    a. Indoor Dry and Clean Locations: NEMA 250, Type 1.
    b. Outdoor Locations: NEMA 250, Type 3R.
    c. Kitchen or Wash-Down Areas: NEMA 250, Type 4X, stainless steel.
    d. Other Wet or Damp Indoor Locations: NEMA 250, Type 4.
    e. Indoor Locations Subject to Dust, Falling Dirt, and Dripping Noncorrosive Liquids: NEMA 250, Type 12.

2. Mounting Height:

    a. Standard: 84 inches to top of enclosure (so that maximum height of highest breaker is 79 inches maximum).

3. Front: Secured to box with concealed trim clamps. For surface-mounted fronts, match box dimensions; for flush-mounted fronts, overlap box. Trims shall cover all live parts and shall have no exposed hardware.

4. Hinged Front Cover: Entire front trim hinged to box and with standard door within hinged trim cover. Trims shall cover all live parts and shall have no exposed hardware.

I. Incoming Mains Location: Top or Bottom as determined by Contractor, based on field conditions, UNO.

J. Phase, Neutral, and Ground Buses: Hard-drawn copper (98 percent conductivity), or tin-plated aluminum.

K. Conductor Connectors: Suitable for use with conductor material, quantity and sizes. Refer to the Feeder Schedule on the contract documents.

1. Material: Hard-drawn copper (98 percent conductivity), or tin-plated aluminum.

2. Main and Neutral Lugs: Mechanical type, with a lug on the neutral bar for each pole in the panelboard.

3. Ground Lugs and Bus - Configured Terminators: Mechanical type, with a lug on the bar for each pole in the panelboard.

4. Feed-Through Lugs: Mechanical type, suitable for use with conductor material. Locate at opposite end of bus from incoming lugs or main device.

5. Sub-feed (Double) Lugs: Mechanical type suitable for use with conductor material. Locate at same end of bus as incoming lugs or main device.

L. NRTL Label: Panelboards shall be labeled by an NRTL acceptable to authority having jurisdiction for use as service equipment with one or more main service disconnecting and overcurrent protective devices.

M. Future Devices: Panelboards shall have mounting brackets, bus connections, filler plates, and necessary appurtenances required for future installation of devices.

N. Panelboard Short-Circuit Current Rating: Fully rated to interrupt symmetrical short-circuit current available at terminals. Assembly listed by an NRTL for 100 percent interrupting capacity.

2.03 DISCONNECTING AND OVERCURRENT PROTECTIVE DEVICES

A. All OCPDs shall be fully rated for available fault current. No series rating will be allowed.

B. Manufacturers – Breakers shall be manufactured by the same manufacturer as the panelboard in which they are installed.

C. Branch Overcurrent Protective Devices - Bolt-on circuit breakers or plug-in circuit breakers where individual positive-locking device requires mechanical release for removal. Replaceable without disturbing adjacent units.

2.04 CIRCUIT BREAKERS

A. General requirements

1. Breakers shall meet current NEMA and UL specifications as applicable to frame size, standard rating and interrupting capability.

2. Breakers shall be one-, two-, or three-pole as scheduled, operate manually for normal ON-OFF switching and automatically under overload and short circuit conditions.

3. The operating handle shall open and close all poles simultaneously on multi-pole breakers. The operating mechanism shall be trip-free so that contacts cannot be held closed against abnormal overcurrent or short circuit conditions. Do not use single-pole circuit breakers with handle ties where multi-pole breakers are indicated on the panel schedule or where required for poly-phase loads.

4. Breakers shall be of the type noted on panel schedule (shunt-trip, GFCI, arc-fault, etc.) or as required by the equipment being provided.

5. Breakers noted as GFI protected for equipment shall have a 30mA or greater trip.

6. Breakers noted as GFI protected for personnel shall have a 6mA trip.

7. A control transformer with primary and secondary fusing shall be provided as required for control of shunt-trip breakers.

B. Molded-Case Circuit Breaker (MCCB): Comply with UL 489, with interrupting capacity to meet available fault currents.

1. Molded case circuit breakers shall be bolt-on type only and suitable for individual as well as panelboard mounting. No breakers designated "plug-on" type allowed unless specifically noted on plans.

2. Thermal-Magnetic Circuit Breakers:

   a. Inverse time-current element for low-level overloads.
   b. Instantaneous magnetic trip element for short circuits.
   c. Adjustable magnetic trip setting for circuit-breaker frame sizes 250 A and larger.

3. Adjustable Instantaneous-Trip Circuit Breakers: Magnetic trip element with front-mounted, field-adjustable trip setting.

4. Electronic trip circuit breakers with rms sensing; field-replaceable rating plug or field-replicable electronic trip; and the following field-adjustable settings (LSIG):

   a. Instantaneous trip.
   b. Long- and short-time pickup levels.
   c. Long- and short-time adjustments.
   d. Ground-fault pickup level, time delay, and I squared t response.

5. Current-Limiting Circuit Breakers: Frame sizes 400 A and smaller; let-through ratings less than NEMA FU 1, RK-5.

6. GFCI Circuit Breakers: Single- and double-pole configurations with Class A ground-fault protection (6-mA trip).

7. GFEP Circuit Breakers: Class B ground-fault protection (30-mA trip).

8. Arc-Fault Circuit Interrupter Circuit Breakers: Comply with UL 1699; 120/240-V, single-pole configuration.

9. Sub-feed Circuit Breakers: Vertically mounted.

10. MCCB Features and Accessories:

    a. Standard frame sizes, trip ratings, and number of poles.
    b. Breaker handle indicates tripped status.
    c. UL listed for reverse connection without restrictive line or load ratings.
    d. Lugs: Mechanical style, suitable for number, size, trip ratings, and conductor materials.
    e. Application Listing: Appropriate for application; Type SWD for switching fluorescent lighting loads; Type HID for feeding fluorescent and HID lighting circuits.
    f. Ground-Fault Protection: Integrally mounted relay and trip unit with adjustable pickup and time-delay settings, push-to-test feature, and ground-fault indicator.
    g. Provide arc fault reduction switching with local status indicator on the main and any other breakers with 1200A or greater frame (that can be adjusted to 1200A or higher) in accordance with NEC 240.87.
    h. Provide Ground Fault Protection for the main disconnect rated 480Y/277V with 1000A or greater rating, in accordance with NEC 240.13.
    i. Handle Padlocking Device: Fixed attachment, for locking circuit-breaker handle in on or off position.

2.05 SURGE PROTECTION DEVICES

A. Refer to Section 26 43 13; Surge Protection for Low-Voltage Electrical Power Circuits.

2.06 DISTRIBUTION PANELBOARDS

A. Design is generally based on the Square D, I-Line panelboard.

B. Panelboards: NEMA PB 1, distribution type.

C. Doors: Secured with vault-type latch with tumbler lock; keyed alike.

1. For doors more than 36 inches (914 mm) high, provide two latches, keyed alike.

D. Mains: As noted on drawings.

E. Branch OCPDs: Bolt-on or plug-in circuit breakers where individual positive-locking device requires mechanical release for removal.

2.07 LIGHTING AND APPLIANCE BRANCH-CIRCUIT PANELBOARDS

A. Panelboards: NEMA PB 1, lighting and appliance branch-circuit type.

B. Mains: As noted on drawings.

C. Branch Overcurrent Protective Devices: Bolt-on circuit breakers, replaceable without disturbing adjacent units.

D. Doors: Concealed hinges; secured with flush latch with tumbler lock; keyed alike.

E. Column-Type Panelboards: Single row of overcurrent devices with narrow gutter extension and overhead junction box equipped with ground and neutral terminal buses.

2.08 IDENTIFICATION

A. Service Equipment Label: NRTL labeled for use as service equipment for switchboards (as applicable) with one or more service disconnecting and overcurrent protective devices.

B. Breaker Labels - Faceplate shall list current rating, UL and IEC certification standards, and AIC rating.

PART 3 EXECUTION

3.01 EXAMINATION

A. Receive, inspect, handle, and store panelboards according to NEMA PB 1.1.

B. Examine panelboards before installation. Reject panelboards that are damaged or rusted or have been subjected to water saturation.

C. Examine elements and surfaces to receive panelboards for compliance with installation tolerances and other conditions affecting performance of the Work.

D. Examine all OCPDs before installation. Reject any that are moisture damaged or physically damaged.

E. Examine utilization equipment nameplates and installation instructions. Install OCPDs of sizes and with characteristics appropriate for each piece of equipment.

F. Proceed with installation only after unsatisfactory conditions have been corrected.

3.02 INSTALLATION

A. Comply with NECA 1.

B. Install panelboards and accessories according to NEMA PB 1.1.

C. Comply with mounting and anchoring requirements specified in Section 26 05 48.16 "Seismic Controls for Electrical Systems."

D. Mount top of enclosure (standard panelboards or ADA dwelling unit panelboards) in accordance with mounting heights noted in paragraph 2.2 above.

E. Mount panelboard cabinet plumb and rigid without distortion of box.

F. Mount recessed panelboards with fronts uniformly flush with wall finish and mating with back box.

G. Install filler plates in unused spaces.

H. Install overcurrent protective devices and controllers not already factory installed.

1. Set field-adjustable, circuit-breaker trip ranges.

2. See Section 26 05 74, “Overcurrent Protective Device Coordination and Arc-Flash Study.”

I. Make grounding connections and bond neutral for services and separately derived systems to ground. Make connections to grounding electrodes, separate grounds for isolated ground bars, and connections to separate ground bars.

J. Ground fault breaker settings.

1. Set GF Trip Pickup at 0.5 for all Main and Branch GF breakers, UNO.

2. Set GF Trip Delay to 0.1 for the Main breaker and to 0 or OFF for all Branch GF breakers, UNO.

3. Set GF Trip Slope to 0 for all Main and Branch GF breakers, UNO.

K. Spare conduit stub-outs at recessed panels

1. In the following paragraphs, accessible is defined as being arranged so that an appropriately dressed person, 6'-2" tall, weighing 250 pounds, may approach the area in question with tools and products necessary for the work intended, and may then position himself/herself to properly and safely perform the task to be accomplished, without disassembly or damage to the surrounding installation.

2. All spare conduits shall be terminated in locations where they are accessible from a crawlspace, attic, or by ladder in areas that have t-grid ceilings. They shall be terminated away from equipment, ducts or pipes that would obstruct access.

3. Stub four (4) 1-inch empty conduits from panelboard into accessible ceiling space above the panel, or a space designated to be ceiling space in the future.

4. Where applicable, stub four (4) 1-inch empty conduits into accessible floor space or accessible ceiling space on the level below.

L. Arrange conductors in gutters into groups and bundle and wrap with wire ties.

M. Panelboards shall not be used as pull-boxes for any wiring that does not terminate in that panelboard.

3.03 IDENTIFICATION

A. Identify field-installed conductors, interconnecting wiring, and components; install warning signs complying with requirements in Section 26 05 53 "Identification for Electrical Systems."

B. Circuit Directory: Directory card inside panelboard door, mounted in transparent card holder. Indicate installed circuit loads; incorporate Owner's final room designations. Obtain approval before installing. Handwritten directories are not acceptable. Install directory inside panelboard door.

C. Panelboard Nameplates: Label each panelboard with a nameplate complying with requirements for identification specified in Section 26 05 53 "Identification for Electrical Systems." Include: Panel name, voltage, amperage, number of phases and wires, source and available fault current with date calculated.

D. Device Nameplates: Label each branch circuit device in power panelboards with a nameplate complying with requirements for identification specified in Section 26 05 53 "Identification for Electrical Systems."

E. Install warning signs/labels complying with requirements in Section 26 05 53 "Identification for Electrical Systems" identifying source of remote circuit.

F. On main distribution panel door provide a laminated one-line diagram of the electrical system and all panel configurations.

3.04 FIELD QUALITY CONTROL

A. Perform the following tests and inspections:

1. Acceptance:

a. Test insulation resistance for each panelboard bus, component, connecting supply, feeder, and control circuit. Open control and metering circuits within the panelboard, and remove neutral connection to surge protection and other electronic devices prior to insulation test. Reconnect after test.
b. Test continuity of each circuit.

2. Test ground-fault protection of equipment for service equipment per NFPA 70.

3. Correct malfunctioning units on-site, where possible, and retest to demonstrate compliance; otherwise, replace with new units and retest.

4. Test and adjust controls, remote monitoring, and safeties. Replace any damaged and malfunctioning controls and equipment.

5. Test and demonstrate proper function of all GFCI, AFCI and shunt-trip breakers.

B. Panelboards will be considered defective if they do not pass tests and inspections.

C. Prepare test and inspection reports, including a certified report that identifies panelboards included and that describes scanning results, with comparisons of the two scans. Include notation of deficiencies detected, remedial action taken, and observations after remedial action.

3.05 DEMONSTRATION

A. Train Owner's maintenance personnel:

1. To adjust, operate, and maintain panelboards, overcurrent protective devices, instrumentation, and accessories.

2. How to set and reset arc fault reduction switches for maintenance.

END OF SECTION 26 24 16

(This page intentionally left blank)

PART 1 GENERAL

1.01 WORK INCLUDED

A. This section covers work for furnishing and installing motor control centers (MCCs) for use with ac circuits rated 600 Volts and less, as shown on the Drawings for this project, complete. This section includes MCCs with combination controllers and having the following factory-installed components:

1. Feeder-tap units.

2. Measurement and control.

3. Variable Frequency Drives.

1.02 SUMMARY OF WORK

A. This section consists of the Contractor procuring and installing low voltage MCC(s) and/or MCC components. The Contractor and their electrical sub-contractor is responsible for all power wiring to and from all MCC sections as indicated on the Drawings. The Contractor and their electrical sub-contractor shall also coordinate all start-up and commissioning timelines.

B. Installation and testing shall be accomplished according to all appropriate Division 26 00 00, ELECTRICAL specification sections, the Drawings, and the manufacturer's written instructions. This specification also defines the minimum requirements for the manufacturer.

1. Coordinate all new MCC buckets with the Drawings. New control logic diagrams are provided in the Drawings to indicate the desired operation and control of each component in the system.

1.03 GENERAL REQUIREMENTS

A. Also see the GENERAL CONDITIONS, Division 01 00 00, GENERAL REQUIREMENTS, and Section 26 00 10, GENERAL ELECTRICAL REQUIREMENTS which contain information and requirements that apply to the work specified herein and are mandatory for this project.

B. Like items of equipment or materials provided hereunder shall be the end products of one manufacturer to achieve standardization for appearance, maintenance, and replacement, and shall include all necessary appurtenances for a complete and working system. The equipment or materials shall be the product of a manufacturer regularly engaged in the production of equipment or materials for the specified use. The

manufacturer shall have the sole responsibility for the proper functioning and coordination of the equipment or materials as furnished.

C. The Contractor or their sub-contractors shall provide all required miscellaneous equipment and materials, as shown on the Drawings and in accordance with these Specifications. The Contractor or their sub-contractors shall furnish all equipment and material items, whether specified or not, as necessary to provide a complete, operable electrical system.

1.04 SUBMITTALS

A. Submittals shall be provided as specified in Section 01 33 00, SUBMITTALS and Section 26 00 10, GENERAL ELECTRICAL REQUIREMENTS.

B. Submit product data and product certificates for each motor control center product and component used on this project. Include data for each type of controller.

C. Shop Drawings: Provide shop drawings for each MCC and related equipment, with the manufacturer's approval and custom drawings as defined in UL 845, "Motor Control Centers". In addition to the requirements specified in UL 845, include the following:

1. Include dimensioned plans, elevations, sections, and details, including conduit entry locations and sizes, mounting arrangements, and required clearances and service space around equipment.

2. Show tabulations of installed devices, equipment features, and ratings. Include the following:

a. Each installed unit's type and details.
b. Factory installed devices.
c. Enclosure types and details.
d. Nameplate legends.
e. Short circuit current (withstand) rating of complete MCC, and for bus structure and each unit.
f. Features, characteristics, ratings, and factory settings of each installed controller and feeder device, and installed devices.
g. Specified optional features and accessories.
h. UL listing for series rating of overcurrent devices in combination controllers.

3. Vertical and horizontal bus capacities.

4. Schematic and Connection Wiring Diagrams: Include schematic and wiring diagrams for power, signal, and control wiring for each installed controller and each type of MCC.

5. Features, characteristics, ratings, and factory settings of each installed unit.

6. MCC Ethernet Network Architecture drawing complete with TCP/IP address for devices shown in the construction drawings.

D. Seismic Qualification Certificates: Provide certificates for MCCs, accessories, and components, from the manufacturer.

1. Basis for Certification: Indicate whether the “withstand” certification is based on actual test of assembled components or on calculation.

2. Dimensioned Outline Drawings of Equipment Unit: Identify center of gravity and locate and describe mounting and anchorage provisions.

3. Provide detailed description of equipment anchorage devices on which the certification is based and their installation requirements.

E. Provide copies of all source quality control and field quality control reports.

F. Load-Current and Overload Relay Heater List: Compile after motors have been installed, and arrange to demonstrate that selection of heaters suits actual motor nameplate full-load currents.

G. Load-Current and List of Settings of Adjustable Overload Relays: Compile after motors have been installed, and arrange to demonstrate that switch settings for motor running overload protection suit actual motors to be protected.

H. Provide all required operation and maintenance data for motor control centers, all installed devices, and components to include in emergency, operation, and maintenance manuals. In addition to items specified in Section 01 77 00, CONTRACT CLOSEOUT, include the following:

1. Routine maintenance requirements for motor control centers and all installed components.

2. Manufacturer's written instructions for testing and adjusting overcurrent protective devices.

1.05 QUALITY ASSURANCE

A. Electrical Components, Devices, and Accessories: Listed and labeled as defined in NFPA 70, National Electrical Code by a qualified testing agency, and marked for intended location and application.

B. Comply with NEMA ICS 2, ICS 3, ICS 5, and ICS 7. Fabricate and label MCCs to comply with NEMA ICS 18 and UL 845.

C. Installer Qualifications: Workers qualified as defined in NEMA PB 2.1; General Instructions for Proper Handling, Installation, Operation, and Maintenance of Deadfront Distribution Switchboards Rated 600 Volts or Less; and trained in electrical safety as required by NFPA 70E.

D. Manufacturer Qualifications: A qualified manufacturer regularly engaged in the manufacture of MCCs. Maintain, within 300 miles of the project site, a service center capable of providing training, parts, and emergency maintenance and repairs.

E. Source Limitations: Obtain motor control centers and controllers of a single type through one source from a single manufacturer.

F. Testing Agency Qualifications: Accredited by NETA ATS, Acceptance Testing Specifications for Electrical Power Distribution Equipment and Systems.

1. Testing Agency's Field Supervisor: Certified by NETA to supervise on-site testing.

1.06 FIELD CONDITIONS

A. Installation Pathway: Remove and replace access fencing, doors, lift-out panels, and structures as necessary to provide pathway for moving MCCs into place. Coordinate all work with the Contractor.

B. Environmental Limitations:

1. Do not deliver or install MCCs until spaces are enclosed and weathertight, wet work in spaces is complete and dry, work above MCCs is complete, and temporary or permanent HVAC system is operating and maintaining ambient temperature and humidity conditions at occupancy levels during the remainder of the construction period.

2. Rate equipment for continuous operation under the following conditions unless otherwise indicated:

a. Ambient Temperature Rating: Between 23 degrees F to plus 104 degrees F.
b. Ambient Storage Temperature Rating: Note less than minus 4 degrees F and not exceeding 140 degrees F.
c. Altitude Rating: Not exceeding 3300 feet.
d. Humidity Rating: Less than 95 percent, noncondensing.

C. Service Conditions: NEMA ICS 2, usual service conditions, or as noted above.

1.07 COORDINATION

A. Coordinate layout and installation of MCCs and components with other construction that penetrates walls or is supported by them, including electrical and other types of equipment, raceways, piping, ductwork, encumbrances to workspace clearance requirements, and adjacent surfaces. Maintain required workspace clearances and required clearances for equipment access doors and panels in accordance with NEC 110.26.

B. Coordinate layout and installation of MCCs and components with other construction including conduit, piping, equipment, and adjacent surfaces. Maintain required workspace clearances and required clearances for equipment access doors and panels.

C. Coordinate size and location of concrete bases. Cast anchor bolt inserts into bases. Concrete, reinforcement, and formwork requirements are specified in Division 03 00 00, CONCRETE.

D. Coordinate features of motor control centers, installed units, and accessory devices with pilot devices and control circuits to which they connect. Refer to wiring diagrams on the Drawings and the P&ID Drawings for more clarification.

E. Provide all local operator stations including wiring and mounting hardware as shown on the P&ID Drawings for Division 40 00 00 and Division 26 00 00. Coordinate wiring and mounting hardware for all Division 43 00 00 and/or Division 46 00 00 local operator stations.

1.08 WARRANTY

A. Manufacturer's Warranty: Manufacturer agrees to repair or replace MCC enclosures, buswork, overcurrent protective devices, accessories, and factory installed interconnection wiring that fail in materials or workmanship within the specified warranty period.

1. Warranty Period: 24 months from the date of Substantial Completion.

PART 2 PRODUCTS

2.01 PERFORMANCE REQUIREMENTS

A. Seismic Performance: Fabricate and test MCCs according to IEEE 344 to withstand the seismic forces as defined in Section 25 05 48, SEISMIC

CONTROLS FOR ELECTRICAL SYSTEMS and as determined according to ASCE/SEI 7.

1. Basis for Certification: Indicate whether “withstand” certification is based on an actual test of assembled components or on calculation. Shake table testing shall comply with ICC-ES AC156.

2. The term "withstand" means "the MCC system will remain in place without separation of any parts when subjected to the seismic forces specified."

3. Component Importance Factor: 1.5.

4. Component Amplification Factor: 2.5.

5. Component Response Modification Factor: 6.0.

2.02 MOTOR CONTROL CENTERS

A. Manufacturers: Subject to compliance with these requirements, available manufacturers offering products that may be incorporated into the work include, but are not limited to the following:

1. Eaton Corporation.

2. Rockwell Automation, Inc.; Allen Bradley.

3. Square D; by Schneider Electric.

4. ABB/U.S. Electrification.

5. Or equal.

B. Source Limitations: Obtain MCCs, overcurrent protective devices, components, and accessories from a single source from a single manufacturer.

C. Capacities and Characteristics:

a. Integrated Short Circuit Rating for MCC:

1) Fully rated; as shown on the Drawings.

b. Integrated Short Circuit Rating for Each Unit:

1) Fully rated; as shown on the Drawings.

c. Wiring Class: NEMA ICS 2 or 3, Class II, Type B.

d. Bus:

1) Horizontal Bus: 600 A.
2) Vertical Bus: 300 A.
3) Neutral Bus: Full size for 3-phase, 4-wire.

1. Automatic Power Transfer: Electrically operated ATS, 3-pole, solid neutral, as shown in the Drawings. See specification Section 26 36 00, TRANSFER SWITCHES for more information on transfer switches.

2. Magnetic Controllers:

a. As shown on the Drawings.

3. Reduced Voltage Solid State Controllers:

a. As shown on the Drawings.

4. Variable Frequency Drives (VFDs):

a. As shown on the Drawings.

5. Controller Mounted Auxiliary Devices:

a. As shown on the Drawings.

6. Panelboards:

a. As shown on the Drawings.

7. Transformer(s):

a. As shown on the Drawings.

2.03 ENCLOSURES

A. Indoor Enclosures: Freestanding steel cabinets unless otherwise indicated on the Drawings. NEMA 250, Type 12 unless otherwise indicated to comply with environmental conditions at installed location. Ensure metal thickness for enclosure is no less than specified in NEMA ICS 6.

1. Finish: Factory applied finish in manufacturer's standard gray finish over a rust inhibiting primer on treated metal surface.

2.04 ASSEMBLY

A. Structure:

1. Description: Modular arrangement of controllers, control devices, overcurrent protective devices, panelboards, instruments, indicating panels, blank panels, and other items mounted in compartments of motor control center.

2. Controller Units: Combination controller units of types and with features, ratings, and circuit assignments indicated.

    a. Units up to and including Size 3 shall have drawout mountings with connectors that automatically line up and connect with vertical section buses while being racked into their normal, energized positions.
    b. Units in Type B and Type C MCCs shall have pull-apart terminal strips for external control connections.
    c. Provide units with short circuit current ratings equal to or greater than short circuit current rating of motor control center section.

3. Pull Boxes:

    a. Include provisions for ventilation to maintain temperature in pull box within same limits as the MCC.
    b. Set the box back from front to clear circuit breaker removal mechanism.
    c. Covers: Removable covers forming top, front, and sides.
    d. Insulated bottom of fire-resistive material with separate holes for cable drops into MCC.
    e. Cable Supports: Arranged to facilitate cabling and adequate to support cables, including supports for future cables.
    f. When equipped with barriers, supply with access to check bus bolt tightness.

B. Compartments: Modular; individual lift-off doors with concealed hinges and quick-captive screw fasteners.

1. Interlock compartment door to require that the disconnecting means is "Off" before door can be opened or closed, except by operating a concealed release device.

2. Compartment construction shall allow for removal of units without opening adjacent doors, disconnecting adjacent compartments, or disturbing operation of other units in MCC.

3. The same size compartments shall be interchangeable to allow rearrangement of units, such as replacing three single units with a unit requiring three spaces, without cutting or welding.

C. Bus Transition and Incoming Pull Sections: Included and aligned with the structure of the MCC. Provide pass through bussing on main on all sections.

D. Owner's Metering Compartment: A separate customer metering compartment and section with front hinged door, metering, and current transformers for each meter. Current transformer secondary wiring shall be terminated on shorting-type terminal blocks. Include PTs having primary and secondary fuses with disconnecting means and secondary wiring terminated on terminal blocks.

E. Interchangeability: Compartments shall be constructed to allow for removal of units without opening adjacent doors, disconnecting adjacent compartments, or disturbing operation of other units in MCC; same-size compartments shall be provided to permit interchangeability and ready rearrangement of units, such as replacing three single units with a unit requiring three spaces, without cutting or welding.

F. Wiring Spaces:

1. Vertical wireways in each vertical section for vertical wiring to each unit compartment; supports to hold wiring in place.

2. Horizontal wireways in bottom and top of each vertical section for horizontal wiring between vertical sections; supports to hold wiring in place.

G. Provisions for Future:

1. Compartments marked "Future" shall be bused, wired and equipped with guide rails or equivalent, and ready for insertion of drawout units.

2. Compartments marked "Spare" shall include provisions for connection to the vertical or horizontal bus.

H. Integrated Short Circuit Rating:

1. Short Circuit Current Rating for Each Unit: Fully rated; as shown on the Drawings.

2. Short Circuit Current Rating of MCC: Fully rated with its main overcurrent device; as shown on the Drawings.

I. Control Power:

1. 120 Volt ac; obtained from CPT integral with controller; with primary and secondary fuses. The CPT shall be of sufficient capacity to

operate integral devices and remotely located pilot, indicating, and control devices.

2. Control Circuits: 24 Volt dc, supplied centrally from two redundant, automatically switched power supplies. Provide a 24 Volt dc UPS to back up power on the 24 Volt dc power supplies. Provide 1 minute of back-up supply.

3. CPT Spare Capacity: 100 VA.

J. Factory Installed Wiring: Factory installed, with bundling, lacing, and protection included. Use flexible conductors for No. 8 AWG and smaller, for conductors across hinges, and for conductors for interconnections between shipping units.

1. Wiring Class: NEMA ICS 18, Class I Type B-T, for starters Size 3 and smaller.

2. Control and Load Wiring: Factory installed, with bundling, lacing, and protection included. Use flexible conductors for No. 8 AWG and smaller, for conductors across hinges, and for conductors for interconnections between shipping units.

K. Bus:

1. Main Horizontal and Equipment Ground Buses: Uniform capacity for entire length of MCC's main and vertical sections. Provide for future extensions.

2. Vertical Phase and Equipment Ground Buses: Uniform capacity for entire usable height of vertical sections, except for sections incorporating single units.

3. Phase Bus and Neutral Bus Material: Hard-drawn copper of 98 percent minimum conductivity or silver or tin-plated alloy, with mechanical or compression connectors for outgoing conductors.

4. Ground Bus: Hard-drawn copper of 98 percent minimum conductivity, with pressure connector for ground conductors, minimum size 1/4-inch by 2 inches. Equip with mechanical or compression connectors for outgoing conductors.

5. Neutral Disconnect Link: Bolted, uninsulated, 1/4-inch by 2-inch copper bus, arranged to connect neutral bus to ground bus.

6. Bus Bar Insulation: Factory applied, flame retardant, tape wrapping of individual bus bars or flame retardant, spray applied insulation. Insulation temperature rating shall not be less than 105 degrees C.

2.05 MAIN DISCONNECT AND OVERCURRENT PROTECTIVE DEVICE(S)

A. Molded Case Circuit Breaker (MCCB; to 1600 A): Fixed mounted, manually operated air-circuit breaker. Comply with UL 489.

1. MCCB shall have quick-make, quick-break, over-center switching mechanism that is mechanically trip-free; its position shall be shown by the position of the handle, and manual push-to-trip push button.

2. Solid state monitoring and tripping system shall be provided to show system status monitoring, adjustable time-current protection, and shunt trip.

a. Interchangeable current sensors and timing circuits for adjustable time-current protection settings and status signals.
b. Trip-setting dials or interchangeable plugs to establish the continuous trip of the circuit breaker. Plugs shall not be interchangeable between frames, and the breaker may not be closed without the plug. Provide with neutral ground-fault sensor.
c. Time-current adjustments to achieve protective device coordination as follows:

1) Adjustable long-time delay.
2) Adjustable short-time setting and delay to shape the time-current curve.
3) Adjustable instantaneous setting.
4) Individually adjustable ground-fault setting and time delay.

d. Built-in connector to test the long-time delay, instantaneous, and ground-fault functions of the breaker.
e. Built-in digital ammeter display, showing load current and tripping cause.

3. Switch operator power shall be from the control power specified in the "Assembly" article hereinbefore.

B. Surge Suppression: Factory installed as an integral part of the incoming feeder, complying with UL 1449, SPD latest edition.

2.06 ACROSS THE LINE MANUAL CONTROLLERS

A. As specified in Section 26 29 13.03, MANUAL AND MAGNETIC CONTROLLERS.

2.07 MAGNETIC CONTROLLERS

A. As specified in Section 26 29 13.03, MANUAL AND MAGNETIC CONTROLLERS.

2.08 VARIABLE FREQUENCY DRIVE(S) OR CONTROLLER(S)

A. Drive or Controller Units: Combination controllers, consisting of variable frequency power converter that is factory packaged in an enclosure, with integral disconnecting means and overcurrent and overload protection. Normal Duty current shall be suitable for the application. Listed and labeled by an NRTL as a complete unit; arranged for self-protection, protection, and variable speed control of one or more three phase induction motors by adjusting output voltage and frequency. Comply with NEMA ICS 7, NEMA ICS 61800-2, UL 508C, and UL 508E.

1. Units suitable for operation of NEMA MG 1, Design A and Design B motors as defined by NEMA MG 1, Section IV, Part 30, "Application Considerations for Constant Speed Motors Used on a Sinusoidal Bus with Harmonic Content and General Purpose Motors Used with Adjustable Voltage or Adjustable Frequency Controls or Both."

2. Units suitable for operation of inverter-duty motors as defined by NEMA MG 1, Section IV, Part 31, "Definite Purpose Inverter-Fed Polyphase Motors."

3. Listed and labeled for integrated short circuit current (withstand) rating by an NRTL acceptable to authorities having jurisdiction.

4. Listed and labeled for single phase use by an NRTL acceptable to authorities having jurisdiction.

5. Provide drives with Ethernet/IP communications module matching control logic diagrams in the Drawings. See Division 40 specifications for more information on the communication protocol.

B. Disconnects:

1. MCCB:

a. UL 489, with interrupting capacity to comply with available fault currents; thermal magnetic MCCB, with inverse time-

current element for low-level overloads and instantaneous magnetic trip element for short circuits.

b. Front mounted, adjustable magnetic trip setting for circuit breaker frame sizes 250 A and larger.

c. Lockable Handle: For three padlocks and interlocks with cover in closed position.

d. Auxiliary contacts "a" and "b" arranged to activate with MCCB handle.

e. Normally Open alarm contact that operates only when MCCB has tripped.

C. Operating Requirements:

1. Input AC Voltage Tolerance: Plus 10 and minus 10 percent of VFD input voltage rating.

2. Input AC Voltage Unbalance: Not exceeding 5 percent.

3. Input Frequency Tolerance: Plus or minus 3 percent of VFD frequency rating.

4. Minimum Efficiency: 97 percent at 60 Hz, full load.

5. Minimum Displacement Primary Side Power Factor: 98 percent under any load or speed condition.

6. Overload Capability:

a. For variable torque controllers, 1.1 times the base load current for 60 seconds; minimum of 1.8 times the base load current for three seconds.

b. For constant torque controllers, 1.5 times the base load current for 60 seconds; minimum of 1.8 times the base load current for three seconds.

7. Starting Torque: Minimum of 100 percent of rated torque from 3 to 60 Hz.

8. Speed Regulation: Plus or minus 5 percent.

9. Output Carrier Frequency: Field selectable.

10. Stop Modes: Programmable; includes fast, free-wheel, and dc injection braking.

11. Internal Adjustability Capabilities:

    a. Minimum Speed: 5 to 25 percent of maximum rpm.
    b. Maximum Speed: 80 to 100 percent of maximum rpm.
    c. Acceleration: 0.1 to 999.9 seconds.
    d. Deceleration: 0.1 to 999.9 seconds.
    e. Current Limit: 30 to a minimum of 150 percent of maximum rating.

12. Self-Protection and Reliability Features:

    a. Capable of riding through intermittent communication failures.
    b. Loss of Input Signal Protection: Selectable response strategy including speed default to a percent of the most recent speed, a preset speed, or stop; with alarm.
    c. Undervoltage and overvoltage trips.
    d. Inverter overcurrent trips.
    e. VFD and Motor Overload/Overtemperature Protection: Microprocessor based thermal protection system for monitoring VFDs and motor thermal characteristics, and for providing VFD overtemperature and motor overload alarm and trip; settings selectable via the keypad; NRTL approved and listed and labeled by an NRTL.
    f. Critical frequency rejection, with three selectable, adjustable deadbands.
    g. Instantaneous line-to-line and line-to-ground overcurrent trips.
    h. Loss of phase protection.
    i. Reverse phase protection.
    j. Short circuit protection.
    k. Motor over temperature fault.

13. Torque Boost: Automatically varies starting and continuous torque to at least 1.5 times the minimum torque to ensure high-starting torque and increased torque at slow speeds.

14. Motor Temperature Compensation at Slow Speeds: Adjustable current fall-back based on output frequency for temperature protection of self-cooled, fan-ventilated motors at slow speeds.

D. Operator Station:

1. Inverter Logic: Microprocessor based, 16 bit, isolated from all power circuits.

2. Isolated Control Interface: Allows VFDs to follow remote control signal over a minimum 40:1 speed range.

3. Panel mounted, manufacturer's standard front accessible, sealed keypad and plain English language digital display; allows complete programming, program copying, operating, monitoring, and diagnostic capability.

   a. Keypad: In addition to required programming and control keys, include keys for HAND, OFF, and AUTO modes.
   b. Security Access: Electronic security access to controls through identification and password with at least three levels of access: View only; view and operate; and view, operate, and service.

E. Displays:

1. Historical Logging Information and Displays:

   a. Real-time clock with current time and date.
   b. Running log of total power versus time.
   c. Total run time.
   d. Fault log, maintaining minimum last four faults with time and date stamp for each.

2. Indicating Devices: Digital display and additional readout devices as required, mounted flush in VFD door and connected to display VFD parameters including the following:

   a. Output frequency (Hz).
   b. Motor speed (rpm).
   c. Motor status (running, stop, fault).
   d. Motor current (amperes).
   e. Motor torque (percentage).
   f. Fault or alarming status (code).
   g. PID feedback signal (percentage).
   h. DC link voltage (V dc).
   i. Set-point frequency (Hz).
   j. Motor output voltage (V ac).

F. Automatic Reset/Restart: Attempt three restarts after drive fault or on return of power after an interruption and before shutting down for manual reset or fault correction; adjustable delay time between restart attempts.

G. Power Interruption Protection: To prevent motor from re-energizing after a power interruption until motor has stopped, unless "Bidirectional Auto-speed Search" feature is available and engaged.

H. Bidirectional Auto-speed Search: Capable of starting VFD into rotating loads spinning in either direction and returning motor to set speed in proper direction, without causing damage to drive, motor, or load.

I. Input and Output Filter: Provide input filtering with a minimum 3 percent line reactor. Provide output filtering for each motor. Size output filter as recommended by the manufacturer for the ampere rating to suit the service factor ampacity of the driven motor. The manufacturer may choose between a 5 percent line reactor or dv/dt filtering to suit the length requirements between the motor and the VFD.

J. Communication Port: Ethernet or equivalent connection capable of connecting the VFD to an Ethernet/IP controlled network. Direct communications through Ethernet/IP. No converter modules that allow the drives to connect to Ethernet/IP like Modbus will be allowed.

2.09 CONTROLLER MOUNTED AUXILIARY DEVICES

A. Control Circuit and Pilot Devices: Factory installed in controller enclosure cover unless otherwise indicated. Comply with NEMA ICS 5.

1. Push Buttons, Pilot Lights, and Selector Switches: Heavy-duty, oil-tight type.

a. Push Buttons: Covered types; maintained and momentary contact as indicated in the Drawings.
b. Pilot Lights: LED types; Red, Green, and Amber; push to test. Coordinate with Logic Diagrams.
c. Selector Switches: Rotary type.

B. Elapsed Time Meters: Heavy-duty with digital readout in hours; non-resettable.

C. Meters: Panel type, 2-1/2-inch minimum size with 90 degree or 120 degree scale and plus or minus 2 percent accuracy, with selector switches having an Off position.

D. Auxiliary Dry Contacts: Reversible Normally Closed/Normally Open.

E. Control Relays:

1. Time Delay: Auxiliary and adjustable solid state time delay relays.

2. Phase Failure, Phase Reversal, and Undervoltage and Overvoltage Relays: Solid state sensing circuit with isolated output contacts for hard-wired connections and adjustable undervoltage, overvoltage, and time delay settings.

F. EtherNet/IP Devices:

1. Motor control center assemblies shall be provided with a factory assembled EtherNet/IP communications network providing direct connectivity between MCC devices and the plant control system.

2. Motor control centers shall provide all required Ethernet 10/100 auto negotiate managed industrial switches per lineup. The Ethernet switches shall have sufficient ports available to connect to each EtherNet/IP device and have at least 2 open ports for a customer connection to the Plant Control Network and a PC connection for maintenance.

3. The EtherNet/IP system installed in the MCC shall include a complete and tested cabling system. The cabling system shall be 600V Cat 6 and consist of home run connections from the device to a switch located in the MCC and in accordance with the ODVA specification. Non-standard, non-shielded cable will not be accepted.

4. All cabling shall be securely supported and attached to the MCC structure in accordance with the Drawings and the manufacturer's recommendations.

5. EtherNet/IP communications modules shall be provided at each device interfacing to the EtherNet/IP networks. The communications modules shall be installed in the unit device compartment or bucket, and shall be direct-connected to the EtherNet/IP Ethernet cable. Each device shall be provided with the appropriate factory fabricated cable for interfacing the communications module with the associated EtherNet/IP device.

6. The MCC Ethernet Switch(es) shall have dual 24VDC power supply. One 24VDC power supply unit shall be powered by a dedicated UPS device installed in the MCC and the other shall be powered from a dedicated 120VAC circuit coming from a Local Control Panel.

7. All Ethernet cables shall be labeled.

8. Each MCC device with Ethernet/IP communication protocol shall have a static TCP/IP address.

2.10 MEASUREMENT AND CONTROL DEVICES

A. Instrument Transformers: NEMA EI 21.1, IEEE C57.13, and the following:

1. Potential Transformers (PTs): IEEE C57.13; 120 Volt, 60 Hz, double secondary; disconnecting type with integral fuse mountings. Burden and accuracy shall be consistent with connected metering and relay devices.

2. Current Transformers (CTs): IEEE C57.13; 5 Amp, 60 Hz, secondary; wound type; double secondary winding and secondary shorting device. Burden and accuracy shall be consistent with connected metering and relay devices.

3. Control Power Transformers (CPTs): Dry type, mounted in separate compartments for units larger than 3 kVA.

4. Current Transformers for Neutral and Ground Fault Current Sensing: Connect secondary wiring to ground overcurrent relays, via shorting terminals, to provide selective tripping of main and tie circuit breaker. Coordinate with feeder circuit breaker and ground fault protection.

B. Multifunction Digital Metering Monitor: Microprocessor based unit suitable for three-wire or four-wire systems and with the following features:

1. Listed or recognized by a nationally recognized testing laboratory.

2. Inputs from sensors or 5 Amp current transformer secondaries, and potential terminals rated to 600 Volts.

3. Switch selectable digital display of the following values with maximum accuracy tolerances as indicated:

a. Phase Currents, Each Phase: Plus or minus 1 percent.
b. Phase-to-Phase Voltages, Three Phase: Plus or minus 1 percent.
c. Phase-to-Neutral Voltages, Three Phase: Plus or minus 1 percent.
d. Three Phase Real Power (Megawatts): Plus or minus 2 percent.
e. Three Phase Reactive Power (Megavars): Plus or minus 2 percent.
f. Power Factor: Plus or minus 2 percent.
g. Frequency: Plus or minus 0.5 percent.
h. Megawatt Demand: Plus or minus 2 percent; demand interval programmable from 5 to 60 minutes.

i. Accumulated Energy, Megawatt Hours: Plus or minus 2 percent. Accumulated values unaffected by power outages up to 72 hours.
j. Contact devices shall operate remote impulse totalizing demand meter.

4. Mounting: Display and control unit flush or semi-flush mounted in instrument compartment door.

5. Control Power Fuses: Primary and secondary fuses for current limiting and overload protection of transformer and fuses for protection of control circuits.

2.11 ACCESSORY COMPONENTS AND FEATURES

A. Mounting Accessories: Comply with the requirements in Section 26 05 48, SEISMIC CONTROLS FOR ELECTRICAL SYSTEMS or the manufacturer's instructions for anchors, mounting channels, bolts, washers, and other mounting accessories.

2.12 IDENTIFICATION

A. Service Equipment Label: NRTL labeled for use as service equipment for MCCs (as applicable) with one or more service disconnecting and overcurrent protective devices.

1. Breaker Labels: Faceplate shall list current rating, UL and IEC certification standards, and AIC rating.

2.13 MAINTENANCE MATERIALS

A. Furnish extra materials that match products installed and that are packaged with protective covering for storage and identified with labels describing the contents.

1. Keys: Two spares for each type of MCC enclosure lock.

2. Potential Transformer Fuses: Equal to 10 percent of amount installed for each size and type, but no fewer than 2 of each size and type.

3. Control Power Fuses: Equal to 10 percent of amount installed for each size and type, but no fewer than 2 of each size and type.

4. Fuses and Fusible Devices for Fused Circuit Breakers: Equal to 10 percent of amount installed for each size and type, but no fewer than 3 of each size and type.

5. Fuses for Fused Switches: Equal to 10 percent of amount installed for each size and type, but no fewer than 3 of each size and type.

6. Fuses for Fused Power Circuit Devices: Equal to 10 percent of amount installed for each size and type, but no fewer than 3 of each size and type.

7. Indicating Lights: Equal to 10 percent of amount installed for each size and type, but no fewer than 1 of each size and type.

PART 3 EXECUTION

3.01 SOURCE QUALITY CONTROL

A. Furnish shop inspection and testing for all MCCs in accordance with NEMA ICS 18 and IEEE C37.20.7.

B. MCCs will be considered defective if they do not pass tests and inspections.

C. Prepare test and inspection reports and submit to the Engineer.

3.02 DELIVERY, STORAGE, AND HANDLING

A. Deliver MCCs in sections or shipping splits of lengths that can be moved past obstructions in the delivery path, individually wrapped for protection, and mounted on shipping skids.

B. Handle motor control centers according to the following:

1. NEMA ICS 2.3, "Instructions for the Handling, Installation, Operation, and Maintenance of Motor Control Centers Rated Not More Than 600 Volts."

2. NECA 402, "Recommended Practice for Installing and Maintaining Motor Control Centers."

C. Store indoors in clean dry space with uniform temperature to prevent condensation. Protect from exposure to dirt, fumes, water, corrosive substances, and physical damage.

D. If stored in areas subjected to weather, cover MCCs to provide protection from weather, dirt, dust, corrosive substances, and physical damage. Remove loose packing and flammable materials from inside MCCs; install electric heating (250 W per section) to prevent condensation.

3.03 EXAMINATION

A. Receive, inspect, handle, and store MCCs according to NECA 402 and NEMA ICS 2.3.

B. Examine MCCs before installation. Reject MCCs that are damaged or rusted or have been subjected to water saturation.

C. Examine elements and surfaces to receive MCCs for compliance with installation tolerances and other conditions affecting performance of the work.

D. Examine all OCPDs before installation. Reject any that are moisture damaged or physically damaged.

E. Examine utilization equipment nameplates and installation instructions. Install OCPDs of sizes and with characteristics appropriate for each piece of equipment.

F. Proceed with installation only after unsatisfactory conditions have been corrected.

3.04 INSTALLATION

A. Comply with NECA 1, IEEE C2, and NFPA 70.

B. Install and start-up MCCs and accessories according to applicable parts of NEMA ICS 2.3 and NEMA 7.1.

C. Equipment Floor Mounting:

1. Seismic Bracing: Comply with mounting and anchoring requirements specified in Section 26 05 48, SEISMIC CONTROLS FOR ELECTRICAL SYSTEMS.

2. Install MCCs on a concrete base, 4-inch nominal thickness where shown on the Drawings. Comply with the requirements for concrete bases specified in the Division 03 00 00, CONCRETE specifications and details shown on the Drawings.

3. Install conduits entering underneath the MCC, entering under the vertical section where the conductors will terminate. Install with couplings flush with the concrete base. Extend conduits 2 inches above the concrete base after the switchboard is anchored in place.

4. Prepare interface surface between slab and pad, install rebar and install dowel rods to connect concrete base to concrete floor in

accordance with the details on the Drawings. Unless otherwise indicated, install dowel rods on 18-inch centers around the full perimeter of the concrete base.

5. For supported equipment, install epoxy coated anchor bolts that extend through the concrete base and anchor into the structural concrete floor.

6. Place and secure anchorage devices. Use setting drawings, templates, diagrams, instructions, and directions furnished with the items to be embedded.

7. Install anchor bolts to elevations required for proper attachment to MCCs.

8. Anchor MCC to building structure at the top of the MCC if required or recommended by the manufacturer.

D. Temporary Lifting Provisions: Remove temporary lifting eyes, channels, straps and brackets, and temporary blocking of moving parts from enclosures and components.

E. Install filler plates in unused spaces of panel mounted sections.

F. Tighten accessible bus connections and mechanical fasteners after placing motor control centers.

G. Install fuses in control circuits if not factory installed. Comply with the requirements in Section 26 28 13, FUSES.

H. Install heaters in thermal overload relays. Select heaters based on actual nameplate full-load amperes after motors have been installed.

I. Install, connect, and fuse thermal protector monitoring relays furnished with motor driven equipment.

3.05 IDENTIFICATION

A. Identify field installed conductors, interconnecting wiring, and components; provide warning signs for MCCs and MCC components complying with the requirements for identification specified in Section 26 05 53, IDENTIFICATION FOR ELECTRICAL SYSTEMS.

B. Circuit Directory: Directory card mounted in transparent card holder, or each breaker can be labeled separately.

C. MCC Nameplates: Label each MCC and each cubicle with an engraved nameplate complying with the requirements for identification specified in Section 26 05 53, IDENTIFICATION FOR ELECTRICAL SYSTEMS. Include: MCC name and/or number, cubicle name, voltage, amperage, number of phases and wires, source and available fault current with date calculated.

D. Device Nameplates: Label each enclosure mounted control and pilot device with a nameplate complying with the requirements for identification specified in Section 26 05 53, IDENTIFICATION FOR ELECTRICAL SYSTEMS.

E. Operating Instructions: Frame and mount the printed basic operating instructions for MCCs, including control and key interlocking sequences and emergency procedures. Fabricate frame of finished wood or metal and cover instructions with clear acrylic plastic. Mount on front of MCCs.

3.06 CONTROL WIRING INSTALLATION

A. Install wiring between enclosed controllers and remote devices. Comply with the requirements in Section 26 05 23, CONTROL VOLTAGE ELECTRICAL POWER CONDUCTORS AND CABLES.

B. Bundle, train, and support wiring in enclosures.

C. Connect selector switches and other automatic control selection devices where applicable.

1. Connect selector switches to bypass only those manual control devices and automatic control devices that have no safety functions when the switch is in manual control position.

2. Connect selector switches within enclosed controller circuit in both manual and automatic positions for safety type control devices such as low pressure and high-pressure cutouts, high temperature cutouts, and motor overload protectors.

3.07 CONNECTIONS

A. Comply with the requirements for installation of conduit in Section 26 05 33, RACEWAYS AND BOXES. The Drawings indicate the general arrangement of conduit, fittings, and specialties.

B. Comply with the requirements in Section 26 05 26, GROUNDING AND BONDING.

3.08 FIELD QUALITY CONTROL

A. Perform the following tests and inspections with the assistance of a factory authorized service representative:

1. Acceptance Testing Preparation:

a. Test insulation resistance for each enclosed controller, component, connecting supply, feeder, and control circuit.
b. Test continuity of each circuit.

2. Perform each visual and mechanical inspection and electrical test stated in the NETA Acceptance Testing Specification (ATS). Certify compliance with test parameters.

3. Operational Test: After electrical circuitry has been energized, start units to confirm proper motor rotation and unit operation.

4. Test and adjust controls, remote monitoring, and safeties. Replace damaged and malfunctioning controls and equipment.

5. Mark up a set of the manufacturer's drawings with all field modifications incorporated during construction; return to the manufacturer for inclusion in O&M Manuals and return to the Contractor and the Engineer for inclusion in Record Drawings.

B. MCCs will be considered defective if they do not pass tests and inspections.

C. Prepare test and inspection reports, and submit to the Engineer.

3.09 ADJUSTING

A. Set field adjustable switches, auxiliary relays, time delay relays, timers, and overload relay pickup and trip ranges.

B. Adjust overload relay heaters or settings if power factor correction capacitors are connected to the load side of the overload relays.

C. Adjust the trip settings of MCPs and thermal magnetic circuit breakers with adjustable, instantaneous trip elements. Initially adjust to six times the motor nameplate full load amperes and attempt to start motors several times, allowing for motor cool down between starts. If tripping occurs on motor inrush, adjust settings in increments until motors start without tripping. Do not exceed eight times the motor full load amperes (or 11 times for NEMA Premium Efficient motors if required). Where these maximum settings do not allow starting of a motor, notify the Engineer and Owner before increasing settings.

D. Set field adjustable switches and program microprocessors for required start and stop sequences in reduced voltage, solid state controllers.

E. Program microprocessors in VFDs for required operational sequences, status indications, alarms, event recording, and display features. Clear events memory after final acceptance testing and prior to Substantial Completion.

F. Set field adjustable circuit breaker trip ranges as specified in Section 26 05 73, COORDINATION STUDY, when applicable.

3.10 CLEANING

A. On completion of installation, inspect interior and exterior of MCCs. Remove paint splatters and other spots. Repair exposed surfaces to match original finish.

B. Vacuum clean to remove all dirt and debris; do not use compressed air to assist in cleaning.

3.11 DEMONSTRATION

A. Engage a factory authorized service representative to train the Owner's maintenance personnel:

1. How to adjust, operate, and maintain enclosed controllers, overcurrent protective devices, instrumentation, and accessories.

2. How to use and re-program microprocessor based, reduced voltage, solid state controllers.

END OF SECTION 26 24 19

(This page intentionally left blank)

PART 1 GENERAL

1.01 SUMMARY

A. Section Includes:

1. Straight-blade convenience receptacles.
2. TV outlets (power & signal)
3. GFCI receptacles.
4. Toggle switches.
5. Wall-box dimmers.
6. Wall plates.
7. Finishes.

1.02 RELATED DOCUMENTS

A. Refer to Section 26 09 23 “Lighting Control Devices” for occupancy/vacancy sensors, daylight sensors, low-voltage lighting control panels and devices, room controllers, etc.

1.03 DEFINITIONS

A. Abbreviations of Manufacturers' Names:

1. Cooper: Copper Wiring Devices; Division of Cooper Industries, Inc.
2. Hubbell: Hubbell Incorporated: Wiring Devices-Kellems.
3. Leviton: Leviton Mfg. Company, Inc.
4. P&S: Pass & Seymour/Legrand.

1.04 ACTION SUBMITTALS

A. Product Data: For each type of product.

B. Dimmer switch and LED lamp manufacturers’ literature showing compatibility between the two.

1.05 CLOSEOUT SUBMITTALS

A. Operation and maintenance data.

PART 2 PRODUCTS

2.01 GENERAL WIRING-DEVICE REQUIREMENTS

A. Wiring Devices, Components, and Accessories: Listed and labeled as defined in NFPA 70, by a qualified testing agency, and marked for intended location and application.

B. Comply with NFPA 70.

C. Devices that are manufactured for use with modular plug-in connectors may be substituted under the following conditions:

1. Connectors shall comply with UL 2459 and shall be made with stranding building wire.

2. Devices shall comply with the requirements in this Section.

D. Devices for Owner-Furnished Equipment:

1. Receptacles: Match plug configurations including wire count, poles, twistlock, etc.

E. Source Limitations: Obtain each type of wiring device and associated wall plate from single source from single manufacturer.

2.02 STRAIGHT-BLADE RECEPTACLES

A. Duplex Convenience Receptacles, 125V, 20A: Comply with NEMA WD 1, NEMA WD 6 Configuration 5-20R, UL 498, and FS W-C-596.

1. Products: Subject to compliance with requirements, available products that may be incorporated into the Work include, but are not limited to, the following:

a. Cooper; 5351 (single), 5362 (duplex).
b. Hubbell; HBL5361 (single), HBL5362 (duplex).
c. Leviton; 5361 (single), 5362 (duplex).
d. P&S; 5351 (single), CRB5362 (duplex).

2.03 TV OUTLET (POWER & SIGNAL)

A. Recessed, 3-gang, in-wall enclosure with:

1. 20A duplex receptacle in left, single-gang, opening.

2. Center, single-gang, low-voltage opening with 1-1/4” conduit and pullstring provision for signal cable. Route to accessible ceiling space and to floor box where applicable.

3. Right, single-gang, low-voltage opening with 1” conduit and pullstring provision for signal cable. Route to accessible ceiling space.

B. Products: Subject to compliance with requirements, available products that may be incorporated into the Work include, but are not limited to, the following:

1. Pass & Seymour; TV3WMTVSSW.

2.04 GFCI RECEPTACLES

A. General Description:

1. 125V, 20A, straight blade, non-feed-through type.

2. Comply with NEMA WD 1, NEMA WD 6 Configuration 5-20R, UL 498, UL 943 Class A, and FS W-C-596.

3. Include indicator light that shows when the GFCI has malfunctioned and no longer provides proper GFCI protection.

4. Self-testing:

a. Automatic test initiates within 5 seconds of power availability to the line or load terminals and repeats at least every 3 hours.
b. If auto-monitoring detects a problem, GFCI will trip with the inability to reset.

B. Duplex GFCI Convenience Receptacles, 125V, 20A:

1. Products: Subject to compliance with requirements, available products that may be incorporated into the Work include, but are not limited to, the following:

a. Cooper; VGF20.
b. Hubbell; GFR5352L.
c. Leviton; GFNT2.
d. P&S; 2097.

C. Weather Resistant, Self-Testing, Duplex GFCI Receptacles, 125V, 20A:

1. Products: Subject to compliance with requirements, available products that may be incorporated into the Work include, but are not limited to, the following:

   a. Cooper; WRSGF20.
   b. Hubbell; GFTWRST20.
   c. Leviton; GFWR2.
   d. P&S; 2097TRWR.

2. For use only with wet or damp location covers.

2.05 TOGGLE SWITCHES

A. Comply with NEMA WD 1, UL 20, and FS W-S-896.

B. Switches, 120/277V, 20A:

1. Products: Subject to compliance with requirements, available products that may be incorporated into the Work include, but are not limited to, the following:

   a. Single Pole:
   b. Cooper; AH1221.

      1) Hubbell; HBL1221.
      2) Leviton; 1221-2.
      3) P&S; CSB20AC1.

   c. Two Pole:
   d. Cooper; AH1222.

      1) Hubbell; HBL1222.
      2) Leviton; 1222-2.
      3) P&S; CSB20AC2.

   e. Three Way:
   f. Cooper; AH1223.

      1) Hubbell; HBL1223.
      2) Leviton; 1223-2.
      3) P&S; CSB20AC3.

   g. Four Way:
   h. Cooper; AH1224.

      1) Hubbell; HBL1224.
      2) Leviton; 1224-2.

3) P&S; CSB20AC4.

C. Lit-Handle Switches, 20A:

1. Products: Subject to compliance with requirements, available products that may be incorporated into the Work include, but are not limited to, the following:

a. Cooper; AH1221LT.
b. Hubbell; HBL1201lL.
c. Leviton; 1221-LH1.
d. P&S; PS20AC1-CSL.

2. Description: Single pole, with lighted handle, illuminated when switch is "off".

D. Pilot-Light Switches, 20A:

1. Products: Subject to compliance with requirements, available products that may be incorporated into the Work include, but are not limited to, the following:

a. Cooper; AH1221PL (single-pole), AH1222PL (two-pole).
b. Hubbell; HBL1221PL (single-pole), HBL1222PL (two-pole).
c. Leviton; 1221-PLR (single-pole), 1222-PLR (two-pole).
d. P&S; PS20AC1-RPL (single-pole), PS20AC2-RPL (two-pole).

2. Description: Single pole or two-pole, with lighted handle, illuminated when switch is "on."

E. Key-Operated Switches, 120/277V, 20A:

1. Products: Subject to compliance with requirements, available products that may be incorporated into the Work include, but are not limited to, the following:

a. Single Pole:
b. Cooper; AH1221L.

1) Hubbell; HBL1221L.
2) Leviton; 1121-2L.
3) P&S; PS20AC1L.

c. Two Pole:
d. Cooper; AH1222L.

1) Hubbell; HBL1222L.

2) Leviton; 1122-2L.
3) P&S; PS20AC2L.

e. Three Way:
f. Cooper; AH1223L.

1) Hubbell; HBL1223L.
2) Leviton; 1123-2L.
3) P&S; PS20AC3L.

g. Four Way:
h. Cooper; AH1224L.

1) Hubbell; HBL1224L.
2) Leviton; 1124-2L.
3) P&S; PS20AC4L.

2. Description: Single pole, with factory-supplied key in lieu of switch handle.

F. Single-Pole, Double-Throw, Momentary-Contact, Center-off Switches: 120/277V, 15A; for use with mechanically held lighting contactors.

a. Cooper; 1995, 1995L (keyed).
b. Hubbell; HBL1557, HBL1557L (keyed)
c. Leviton; 1257-W, 1257-L (keyed).
d. Pass & Seymour; 1251, 1251L (keyed).

2.06 DIGITAL TIMER LIGHT SWITCH

A. Products: Subject to compliance with requirements, available products that may be incorporated into the Work include, but are not limited to, the following:

1. Watt Stopper; TS-200.

2. Hubbell; TD300.

3. P&S; RT-100

B. Description: Switchbox-mounted, combination digital timer and conventional switch lighting-control unit, with backlit digital display, with selectable time interval from 5 minutes to 12 hours.

1. Rated 0-800W at 120V ac, and 0-1200W at 277V ac for tungsten, fluorescent, and LED loads.

2. Optional beep warning every five seconds during last minute of countdown.

3. Optional one second light flash warning at one minute before timer runs out.

4. Time scrolling options for overriding the preset time.

5. Electroluminescent back-lit Liquid Crystal Display shows timer count-down.

6. Integral relay for connection to BAS.

C. Weather Resistant, Self-Testing, Duplex GFCI Receptacles, 125V, 15A:

1. Products: Subject to compliance with requirements, available products that may be incorporated into the Work include, but are not limited to, the following:

a. Cooper; TWRSGF15.
b. Hubbell; GFTWRST15.
c. Leviton; GFWT1.
d. P&S; 1597TRWR

2. For use only with wet or damp location covers.

D. TV Outlet (Power & Signal), recessed, 2-gang, in-wall enclosure with tamper resistant, duplex receptacle, 125V, 15A; comply with NEMA WD 1, NEMA WD 6 Configuration 5-15R, and UL 498; and 1” conduit with pull-string provision for signal cables.

1. Products: Subject to compliance with requirements, available products that may be incorporated into the Work include, but are not limited to, the following:

a. Cooper; 35MRW
b. Hubbell; RR1512.

2. Description: Single RJ-45 jack for terminating Category 5e, twisted pair cable complying with Section 26 05 23 "Control-Voltage Electrical Power Conductors" and a single BNC connector for terminating coaxial cable."

3. Comply with UL 1863.

E. Toggle Switches, 120/277V, 15A:

1. Products: Subject to compliance with requirements, available products that may be incorporated into the Work include, but are not limited to, the following:

   a. Single Pole:
   b. Cooper; 1301-7 (standard), 7501 (decorator), 1301-7LT (lit handle).

      1) Hubbell; RS115 (standard), RSD115 (decorator), RS115IL (lit handle).
      2) Leviton; 1451-2 (standard), 5601-2 (decorator), 1461-LC (lit handle).
      3) P&S; 660G (standard), TM870 (decorator), 660-SLG (lit handle).

   c. Two Pole:
   d. Hubbell; RS215 (standard), RSD215 (decorator), RS215IL (lit handle).

      1) Leviton; CS215 (standard), 5602-2 (decorator).
      2) P&S; CS-B15AC2 (standard); 2622 (decorator).

   e. Three Way:
   f. Cooper; 1303-7 (standard), 7503 (decorator) 1303-7LT (lit handle).

      1) Hubbell; RS315 (standard), RSD315 (decorator), RS315IL (lit handle).
      2) Leviton; 1453-2 (standard), 5603-2 (decorator), 1463-LC (lit handle).
      3) P&S; 663G (standard), TM873 (decorator), 663-SLG (lit handle).

   g. Four Way:
   h. Cooper; 1242-7 (standard), 7504 (decorator).

      1) Hubbell; RS415 (standard), RSD415 (decorator), RS415IL (lit handle).
      2) Leviton; 54504-2 (standard), 5604-2 (decorator).
      3) P&S; 664G (standard), TM874 (decorator), 664-SLG (lit handle).

F. Fan-Speed Controls:

   1. Modular, 120-V, full-wave, solid-state units with integral, quiet on-off switches and audible frequency and EMI/RFI filters.

2. Products: Subject to compliance with requirements, available products that may be incorporated into the Work include, but are not limited to, the following:

   a. Cooper; RI061.
   b. Leviton; RNL06-10Z.
   c. P&S; DRSC53PV.

3. Comply with UL 1917.

4. Continuously adjustable rotary knob, 5A.

2.07 WALL-BOX DIMMERS

A. General: These are stand-alone dimmer switches. See Section 26 09 23 “Lighting Control Devices” for dimmers that interface with daylight sensors, low-voltage lighting control panels, room controllers, etc.

B. 0-10V Dimming for LED fixtures:

1. Products: Subject to compliance with requirements, available products that may be incorporated into the Work include, but are not limited to, the following:

   a. Philips; Sunrise series.
   b. Watt Stopper; Radiant series.
   c. Synergy; ISD-BC.
   d. Lutron; Diva series.

2. Slide dimmer with separate ON/OFF switch button. Lighting is switched ON or OFF at the level currently set by the slider.

3. Designed for use with standard three-way and four-way switches for applications requiring control from multiple locations.

4. Match dimmer to lamp(s) being dimmed in accordance with manufacturer’s guidelines.

C. Dimmer Switches for screw-in LED lamps (LED lamps with integral drivers, designed to replace incandescent or screw-in compact fluorescent lamps):

1. Modular, full-wave, solid-state units with integral, quiet on-off switches, with audible frequency and EMI/RFI suppression filters.

2. Match dimmer to lamp(s) being dimmed in accordance with manufacturer’s guidelines.

3. 600 W dimmers shall require no derating when ganged with other devices.

2.08 WALL PLATES

A. Single and combination types shall match corresponding wiring devices.

1. Plate-Securing Screws: Metal with head color to match plate finish.

2. Material for Finished Spaces: 0.05-inch- (1.2-mm-) thick, anodized aluminum.

3. Material for Unfinished Spaces: Galvanized steel.

4. Material for Damp Locations: Cast aluminum with spring-loaded lift cover, listed and labeled for use in wet and damp locations.

B. Damp/Wet Location Covers

1. General:

a. All wiring devices installed in damp or wet locations shall have cast metal covers.
b. Covers shall be UL listed and labeled for use in wet and damp locations.
c. Distinction between damp and wet locations shall be in accordance with NEC 406.9.
d. Cover shall be appropriate for the device orientation with the hinge on top.
e. Gasketing shall be provided to seal the cover to the box. Caulking shall be provided as required to seal any gaps between the cover and wall finish material.

2. Damp Location Covers:

a. Cast metal with spring-loaded lift cover to seal the device when it is NOT in use.
b. Leviton Series 6196 or equivalent.

3. Wet Location (Weatherproof-in-Use) Covers:

a. Heavy Duty, Lockable, cast metal cover to seal the device whether it is in use or not.
b. Intermatic Series WP1010MXD or equivalent.

2.09 FINISHES

A. Device Color:

1. Wiring Devices Connected to Normal Power System: Gray As selected by Engineer unless otherwise indicated or required by NFPA 70 or device listing.

B. Wall Plate Color: Match device color, unless noted otherwise.

PART 3 EXECUTION

3.01 INSTALLATION

A. Comply with NECA 1, including mounting heights listed in that standard, unless otherwise indicated.

B. Coordination with Other Trades:

1. Protect installed devices and their boxes. Do not place wall finish materials over device boxes and do not cut holes for boxes with routers that are guided by riding against outside of boxes.

2. Keep outlet boxes free of plaster, drywall joint compound, mortar, cement, concrete, dust, paint, and other material that may contaminate the raceway system, conductors, and cables.

3. Install device boxes in brick or block walls so that the cover plate does not cross a joint unless the joint is troweled flush with the face of the wall.

4. Install wiring devices after all wall preparation, including painting, is complete.

5. Coordinate receptacle configuration, location and mounting height with equipment/ function it serves.

C. Conductors:

1. Do not strip insulation from conductors until right before they are spliced or terminated on devices.

2. Strip insulation evenly around the conductor using tools designed for the purpose. Avoid scoring or nicking of solid wire or cutting strands from stranded wire.

3. The length of free conductors at outlets for devices shall meet provisions of NFPA 70, Article 300, without pigtails.

4. Existing Conductors:

   a. Cut back and pigtail, or replace all damaged conductors.
   b. Straighten conductors that remain and remove corrosion and foreign matter.
   c. Pigtailing existing conductors is permitted, provided the outlet box is large enough.

D. Device Installation:

1. Replace devices that have been in temporary use during construction and that were installed before building finishing operations were complete.

2. Keep each wiring device in its package or otherwise protected until it is time to connect conductors.

3. Do not remove surface protection, such as plastic film and smudge covers, until the last possible moment.

4. Connect devices to branch circuits using pigtails that are not less than 6 inches (152 mm) in length.

5. When there is a choice, use side wiring with binding-head screw terminals. Wrap solid conductor tightly clockwise, two-thirds to three-fourths of the way around terminal screw.

6. Use a torque screwdriver when a torque is recommended or required by manufacturer.

7. When conductors larger than No. 12 AWG are installed on 15- or 20-A circuits, splice No. 12 AWG pigtails for device connections.

8. Tighten unused terminal screws on the device.

9. When mounting into metal boxes, remove the fiber or plastic washers used to hold device-mounting screws in yokes, allowing metal-to-metal contact.

10. Damp Location Covers: Not permitted UNO. Install only where specified in interior locations.

11. Wet Location Covers: Install everywhere outside UNO.

E. Receptacle Orientation:

1. Install ground pin of vertically mounted receptacles up, and on horizontally mounted receptacles to the left.

F. Device Plates: Do not use oversized or extra-deep plates. Repair wall finishes and remount outlet boxes when standard device plates do not fit flush or do not cover rough wall opening.

G. Dimmers:

1. Install dimmers within terms of their listing.

2. Verify that dimmers used for fan-speed control are listed for that application.

3. Install unshared neutral conductors on line and load side of dimmers according to manufacturers' device listing conditions in the written instructions.

4. Match dimmer to lamp(s) being dimmed in accordance with manufacturer’s guidelines.

H. Arrangement of Devices: Unless otherwise indicated, mount flush, with long dimension vertical and with grounding terminal of receptacles on top. Group adjacent switches under single, multi-gang wall plates.

I. GFCI Receptacles: Install non-feed-through-type GFCI receptacles.

3.02 FIELD QUALITY CONTROL

A. Test Instruments: Use instruments that comply with UL 1436.

B. Test Instrument for Convenience Receptacles: Digital wiring analyzer with digital readout or illuminated digital-display indicators of measurement.

C. Perform the following tests and inspections:

1. Tests for Convenience Receptacles:

a. Line Voltage: Acceptable range is 105 to 132V.
b. Percent Voltage Drop under 15-A Load: A value of 6 percent or higher is unacceptable.
c. Ground Impedance: Values of up to 2 ohms are acceptable.
d. GFCI Trip: Test for tripping values specified in UL 1436 and UL 943.

e. Using the test plug, verify that the device and its outlet box are securely mounted.

f. Tests shall be diagnostic, indicating damaged conductors, high resistance at the circuit breaker, poor connections, inadequate fault current path, defective devices, or similar problems. Correct circuit conditions, remove malfunctioning units and replace with new ones, and retest as specified above.

D. Wiring device will be considered defective if it does not pass tests and inspections.

3.03 IDENTIFICATION

A. Receptacles: Identify panelboard and circuit number from which the device is served.

1. Mark inside of box or coverplate with permanent marker. Test to ensure that marker lines are not visible on outside of cover when it is installed.

2. Mark outside of coverplate using labeler such as Brother PT-90 to produce 1/8” black letters (white letters if cover is dark) on clear tape.

3.04 WEATHER STRIPPING

A. Behind exterior wall devices

1. Install a precut foam insulation pad over the fixture and reinstall the cover.

END OF SECTION 26 27 26

PART 1 GENERAL

1.01 SUMMARY

A. Section Includes:

1. Cartridge and plug fuses rated 600 V ac and less for use in the following:

   a. Control circuits.
   b. Motor-control centers.
   c. Panelboards.
   d. Switchboards.
   e. Enclosed controllers.
   f. Enclosed switches.

2. Spare-fuse cabinets.

1.02 ACTION SUBMITTALS

A. Product Data: For each type of product.

1. Ambient Temperature Adjustment Information: If ratings of fuses have been adjusted to accommodate ambient temperatures, provide list of fuses with adjusted ratings.

   a. For each fuse having adjusted ratings, include location of fuse, original fuse rating, local ambient temperature, and adjusted fuse rating.
   b. Provide manufacturer's technical data on which ambient temperature adjustment calculations are based.

2. Dimensions and manufacturer's technical data on features, performance, electrical characteristics, and ratings.

3. Current-limitation curves for fuses with current-limiting characteristics.

4. Time-current coordination curves (average melt) and current-limitation curves (instantaneous peak let-through current) for each type and rating of fuse.

1.03 CLOSEOUT SUBMITTALS

A. Operation and maintenance data.

1. Ambient temperature adjustment information.

2. Current-limitation curves for fuses with current-limiting characteristics.

3. Time-current coordination curves (average melt) and current-limitation curves (instantaneous peak let-through current) for each type and rating of fuse.

1.04 MAINTENANCE MATERIAL SUBMITTALS

A. Furnish extra materials that match products installed and that are packaged with protective covering for storage and identified with labels describing contents.

1. Fuses: Equal to 10 percent of quantity installed for each size and type, but no fewer than three of each size and type.

1.05 PROJECT CONDITIONS

A. Where ambient temperature to which fuses are directly exposed is less than 40 deg F (5 deg C) or more than 100 deg F (38 deg C), apply manufacturer's ambient temperature adjustment factors to fuse ratings.

PART 2 PRODUCTS

2.01 MANUFACTURERS

A. Manufacturers: Subject to compliance with requirements, available manufacturers offering products that may be incorporated into the Work include, but are not limited to, the following:

1. Bussmann

2. Edison Fuse

3. Ferraz Shawmut

4. Littelfuse

B. Obtain fuses, for use within a specific product or circuit, from a single source from a single manufacturer.

2.02 FUSES

A. Cartridge fuse characteristics: Current-limiting, nonrenewable cartridge fuses with voltage ratings consistent with circuit voltages.

1. Type RK-1: 250V and600V, zero to 600A rating, 200 kAIC, dual-element time delay.

2. Type RK-5: 250V and 600V, zero to 600A rating, 200 kAIC, dual-element, time delay.

3. Type CC: 600V, zero to 30A rating, 200 kAIC, fast acting.

4. Type CD: 600V, 31 to 60A rating, 200 kAIC, fast acting.

5. Type L: 600-V, 601 to 6000A rating, 200 kAIC, time delay.

B. Plug fuse characteristics: Current-limiting with rejection base and voltage ratings consistent with circuit voltages.

1. Type S: 125V, zero to 15A rating, dual-element, time delay.

C. Electrical Components, Devices, and Accessories: Listed and labeled as defined in NFPA 70, by a qualified testing agency, and marked for intended location and application.

D. Comply with NEMA FU 1 for cartridge fuses.

E. Comply with NFPA 70.

F. Coordinate fuse ratings with utilization equipment nameplate limitations of maximum fuse size and with system short-circuit current levels.

2.03 SPARE-FUSE CABINET

A. Characteristics: Wall-mounted steel unit with full-length, recessed piano-hinged door and key-coded cam lock and pull.

1. Size: Adequate for storage of spare fuses specified with 15 percent spare capacity minimum.

2. Finish: Gray, baked enamel.

3. Identification: "SPARE FUSES" in 1-1/2-inch- (38-mm-) high letters on exterior of door.

4. Fuse Pullers: For each size of fuse, where applicable and available, from fuse manufacturer.

PART 3 EXECUTION

3.01 EXAMINATION

A. Examine fuses before installation. Reject fuses that are moisture damaged or physically damaged.

B. Examine holders to receive fuses for compliance with installation tolerances and other conditions affecting performance, such as rejection features.

C. Examine utilization equipment nameplates and installation instructions. Install fuses of sizes and with characteristics appropriate for each piece of equipment.

D. Evaluate ambient temperatures to determine if fuse rating adjustment factors must be applied to fuse ratings.

E. Proceed with installation only after unsatisfactory conditions have been corrected.

3.02 FUSE APPLICATIONS

A. Apply fuses in the following circumstances:

1. Service Entrance: Class L or Class RK-1, time delay.

2. Feeders and Branch Circuits: Class L or Class RK-1, time delay.

3. Motors, Welders, Transformers: Class RK-5, time delay.

4. Control Circuits: Class CC, fast acting.

5. Luminaires: In accordance with fixture manufacturer’s guidelines.

6. Fustats: Type S, time delay with rejection base.

B. Size fuses as shown and specified, or as required by load being served. Where fusing in accordance with manufacturer's guidelines requires smaller fuses, provide necessary reducers with no additional cost to Owner.

3.03 INSTALLATION

A. Install fuses in fusible devices. Arrange fuses so rating information is readable without removing fuse.

B. Install spare-fuse cabinet. Verify exact location with Owner’s maintenance representative prior to mounting.

3.04 IDENTIFICATION

A. Install labels complying with requirements for identification specified in Section 26 05 53 "Identification for Electrical Systems" and indicating fuse replacement information inside of door of each fused switch and adjacent to each fuse block, socket, and holder.

END OF SECTION 26 28 13

(This page intentionally left blank)

PART 1 GENERAL

1.01 SUMMARY

A. Section Includes:

1. Fusible switches.

2. Nonfusible switches.

3. Enclosed circuit breaker switches.

4. Fustats

5. Shunt trip switches.

6. Enclosures.

1.02 DEFINITIONS

A. NC: Normally closed.

B. NO: Normally open.

C. SPDT: Single pole, double throw.

1.03 ACTION SUBMITTALS

A. Product Data: For each type of enclosed switch, accessory, and component indicated. Include nameplate ratings, dimensioned elevations, sections, weights, and manufacturers' technical data on features, performance, electrical characteristics, ratings, accessories, and finishes.

B. Shop Drawings: For enclosed switches.

1. Include plans, elevations, sections, details, and attachments to other work.

2. Include wiring diagrams for power, signal, and control wiring.

1.04 INFORMATIONAL SUBMITTALS

A. Seismic Qualification Certificates: For enclosed switches, accessories, and components, from manufacturer.

B. Field quality-control reports.

1.05 CLOSEOUT SUBMITTALS

A. Operation and maintenance data.

1.06 WARRANTY

A. Manufacturer's Warranty: Manufacturer and Installer agree to repair or replace components that fail in materials or workmanship within specified warranty period.

1. Warranty Period: Two years from date of Substantial Completion.

PART 2 PRODUCTS

2.01 PERFORMANCE REQUIREMENTS

A. Seismic Performance: Enclosed switches shall withstand the effects of earthquake motions determined according to ASCE/SEI 7.

1. The term "withstand" means "the unit will remain in place without separation of any parts from the device when subjected to the seismic forces specified and the unit will be fully operational after the seismic event."

2.02 GENERAL REQUIREMENTS

A. Source Limitations: Obtain enclosed switches, overcurrent protective devices, components, and accessories, within same product category, from single manufacturer.

B. Product Selection for Restricted Space: Drawings indicate maximum dimensions for enclosed switches, including clearances between enclosures, and adjacent surfaces and other items. Comply with indicated maximum dimensions.

C. Electrical Components, Devices, and Accessories: Listed and labeled as defined in NFPA 70, by an NRTL, and marked for intended location and application.

D. Comply with NFPA 70.

2.03 FUSIBLE SWITCHES

A. Manufacturers: Subject to compliance with requirements, available manufacturers offering products that may be incorporated into the Work include, but are not limited to, the following:

1. Square D by Schneider Electric.
2. Eaton Cutler-Hammer.
3. ABB/General Electric Company.

B. Type HD, Heavy Duty:

1. Single throw.
2. Two or three pole.
3. 240 or 600V ac as noted on plans.
4. 1200 A and smaller.
5. UL 98 and NEMA KS 1, horsepower rated, with clips or bolt pads to accommodate fuses indicated on plans, or as required by manufacture of the equipment being protected.
6. Lockable handle (in the OFF position) with capability to accept three padlocks, and interlocked with cover in closed position.
7. Ability to also lock switch handle in the ON position for exterior main disconnect.

C. Accessories:

1. Equipment Ground Kit: Internally mounted and labeled for copper and aluminum ground conductors.
2. Neutral Kit: Internally mounted; insulated, capable of being grounded and bonded; labeled for copper and aluminum neutral conductors.
3. Class R Fuse Kit: Provides rejection of other fuse types when Class R fuses are specified.
4. Lugs: Suitable for number, size, and conductor material.
5. Service-Rated Switches: Labeled for use as service equipment.

2.04 ENCLOSED CIRCUIT BREAKER SWITCHES

A. Manufacturers: Subject to compliance with requirements, available manufacturers offering products that may be incorporated into the Work include, but are not limited to, the following:

1. Square D by Schneider Electric.

2. Eaton Cutler-Hammer.

3. ABB/General Electric Company.

B. MOLDED CASE PROTECTIVE DEVICES

1. Protective devices shall be molded case circuit breakers with inverse time and instantaneous tripping characteristics.

2. Circuit breakers shall be operated by a toggle-type handle and shall have a quick-make, quick-break over-center switching mechanism that is mechanically trip-free. Automatic tripping of the breaker shall be clearly indicated by the handle position. Contacts shall be non-welding silver alloy and arc extinction shall be accomplished by means of DE-ION arc chutes. A push-to-trip button on the front of the circuit breaker shall provide a local manual means to exercise the trip mechanism.

3. Circuit breakers shall have a minimum symmetrical interrupting capacity as indicated on the drawings.

4. Circuit breakers shall have thermal-magnetic trip units and inverse time-current characteristics.

C. ACCESSORIES

1. Provide shunt trips, bell alarms and auxiliary switches as shown on the contract drawings.

2.05 NONFUSIBLE SWITCHES

A. Manufacturers: Subject to compliance with requirements, available manufacturers offering products that may be incorporated into the Work include, but are not limited to, the following:

1. Square D by Schneider Electric.

2. Eaton Cutler-Hammer.

3. ABB/General Electric Company.

B. Type HD, Heavy Duty:

1. Single throw.

2. Two or three pole.

3. 240 or 600V ac as noted on plans.

4. 1200 A and smaller.

5. UL 98 and NEMA KS 1, horsepower rated.

6. Lockable handle (in the OFF position) with capability to accept three padlocks, and interlocked with cover in closed position.

C. Accessories:

1. Equipment Ground Kit: Internally mounted and labeled for copper and aluminum ground conductors.

2. Neutral Kit: Internally mounted; insulated, capable of being grounded and bonded; labeled for copper and aluminum neutral conductors.

3. Lugs: Suitable for number, size, and conductor material.

2.06 FUSTAT

A. Manufacturers: Subject to compliance with requirements, available manufacturers offering products that may be incorporated into the Work include, but are not limited to, the following:

1. Bussmann.

2. Littelfuse.

B. NEMA 1 rated and designed to mount on square, pressed steel box.

1. 15A and smaller.

2. 120V ac.

3. Type S fuse socket.

4. Toggle switch.

5. Pilot light.

2.07 SHUNT TRIP SWITCHES FOR ELEVATORS

A. Manufacturers: Subject to compliance with requirements, available manufacturers offering products that may be incorporated into the Work include, but are not limited to, the following:

1. Mersen.

2. Littelfuse.

B. General Requirements: Comply with ASME A17.1, UL 50, and UL 98, with Class J fuse block and 200-kA interrupting and short-circuit current rating.

C. Type HD, Heavy-Duty:

1. Single throw.

2. Three Pole.

3. 240 or 600V ac as noted on plans.

4. 30, 60, 100 or 200 A as noted on plans.

5. UL 98 and NEMA KS 1, horsepower-rated

6. Integral shunt trip mechanism.

7. Clips or bolt pads to accommodate fuses sized as required by manufacture of the elevator equipment being provided.

8. Lockable handle with capability to accept three padlocks; interlocked with cover in closed position.

D. Control Circuit for fire safety interface relay: 24-Vdc or 120-V ac as coordinated with fire alarm contractor; obtained from integral control power transformer, with primary and secondary fuses of enough capacity to operate shunt trip, pilot, indicating and control devices.

E. Accessories:

1. Oiltight key switch for key-to-test function.

2. Oiltight green ON pilot light.

3. Isolated neutral lug; 100 or 200 percent rating.

4. Mechanically interlocked auxiliary contacts that change state when switch is opened and closed. Contact shall be positively opened mechanically and shall not be dependent on springs or spring steel.

5. Three-pole, double-throw, fire-alarm voltage monitoring relay complying with NFPA 72.

6. Neutral Kit: Internally mounted; insulated, capable of being grounded and bonded; labeled for copper and aluminum neutral conductors.

7. Class R Fuse Kit: Provides rejection of other fuse types when Class R fuses are specified.

2.08 ENCLOSURES

A. Enclosed Switches: UL 489, NEMA KS 1, NEMA 250, and UL 50, to comply with environmental conditions at installed location.

B. Enclosure Finish: The enclosure shall be finished with:

1. Gray baked enamel paint, electrodeposited on cleaned, phosphatized steel (NEMA 250 Type 1).

2. Gray baked enamel paint, electrodeposited on cleaned, phosphatized galvannealed steel (NEMA 250 Types 3R, 12).

3. Brush finish on Type 304 stainless steel (NEMA 250 Type 4-4X stainless steel).

4. Copper-free cast aluminum alloy (NEMA 250 Types 7, 9).

C. Conduit Entry: NEMA 250 Types 4, 4X, and 12 enclosures shall contain no knockouts. NEMA 250 Types 7 and 9 enclosures shall be provided with threaded conduit openings in both endwalls.

D. Operating Mechanism: The switch operating handle shall be externally operable with the operating mechanism being an integral part of the box, not the cover. The cover interlock mechanism shall have an externally operated override. The override shall not permanently disable the interlock mechanism, which shall return to the locked position once the override is released. The tool used to override the cover interlock mechanism shall not be required to enter the enclosure in order to override the interlock.

E. Enclosures designated as NEMA 250 Type 4, 4X stainless steel, 12, or 12K shall have a dual cover interlock mechanism to prevent unintentional opening of the enclosure cover when the switch is ON and to prevent turning the switch ON when the enclosure cover is open.

F. NEMA 250 Type 7/9 enclosures shall be furnished with a breather and drain kit to allow their use in outdoor and wet location applications.

PART 3 EXECUTION

3.01 ENCLOSURE ENVIRONMENTAL RATING APPLICATIONS

A. Enclosed Switches: Provide enclosures at installed locations with the following environmental ratings.

1. Indoor, Dry and Clean Locations: NEMA 250, Type 1.

2. Outdoor Locations: NEMA 250, Type 3R.

3. Kitchen/Wash-Down Areas: NEMA 250, Type 4X, stainless steel.

4. Other Wet or Damp, Indoor Locations: NEMA 250, Type 4.

5. Indoor Locations Subject to Dust, Falling Dirt, and Dripping Noncorrosive Liquids: NEMA 250, Type 12.

6. Hazardous Areas Indicated on Drawings: NEMA 250, Type 7/Type 9 with cover attached by Type 316 stainless steel bolts.

3.02 INSTALLATION

A. Coordinate layout and installation of switches and components with equipment served and adjacent surfaces. Maintain required workspace clearances and required clearances for equipment access doors and panels.

B. Install individual wall-mounted switches with tops at uniform height unless otherwise indicated.

C. Comply with mounting and anchoring requirements specified in Section 26 05 48.16 "Seismic Controls for Electrical Systems."

D. Temporary Lifting Provisions: Remove temporary lifting of eyes, channels, and brackets and temporary blocking of moving parts from enclosures and components.

E. Install fuses in fusible devices.

F. Comply with NFPA 70 and NECA 1.

3.03 IDENTIFICATION

A. Comply with requirements in Section 26 05 53 "Identification for Electrical Systems."

1. Identify field-installed conductors, interconnecting wiring, and components; provide warning signs.

2. Label each enclosure with engraved metal or laminated-plastic nameplate.

3.04 FIELD QUALITY CONTROL

A. Perform tests and inspections.

B. Tests and Inspections for Switches:

1. Visual and Mechanical Inspection:

a. Inspect physical and mechanical condition.
b. Inspect anchorage, alignment, grounding, and clearances.
c. Verify that the unit is clean.
d. Verify blade alignment, blade penetration, travel stops, and mechanical operation.
e. Verify that fuse sizes and types match the Specifications and Drawings.
f. Verify that each fuse has adequate mechanical support and contact integrity.
g. Inspect bolted electrical connections for high resistance using one of the two following methods:

1) Verify tightness of accessible bolted electrical connections by calibrated torque-wrench method in accordance with manufacturer's published data or NETA ATS Table 100.12.

a) Bolt-torque levels shall be in accordance with manufacturer's published data. In the absence of manufacturer's published data, use NETA ATS Table 100.12.

h. Verify correct phase barrier installation.
i. Verify lubrication of moving current-carrying parts and moving and sliding surfaces.

C. Enclosed switches will be considered defective if they do not pass tests and inspections.

D. Prepare test and inspection reports.

1. Test procedures used.

2. Include identification of each enclosed switch tested and describe test results.

3. List deficiencies detected, remedial action taken, and observations after remedial action.

END OF SECTION 26 28 16

(This page intentionally left blank)

PART 1 GENERAL

1.01 SUMMARY

A. Section Includes:

1. Manual motor controllers.
2. Enclosed full-voltage magnetic motor controllers.
3. Enclosures.
4. Accessories.
5. Identification.

1.02 ACTION SUBMITTALS

A. Product Data: For each type of product.

B. Shop Drawings: For each type of controller.

1. Include plans, elevations, sections, and mounting details.
2. Indicate dimensions, weights, required clearances, and location and size of each field connection.
3. Wire Termination Diagrams and Schedules: Include diagrams for signal, and control wiring. Identify terminals and wiring designations and color-codes to facilitate installation, operation, and maintenance. Indicate recommended types, wire sizes, and circuiting arrangements for field-installed wiring, and show circuit protection features. Differentiate between manufacturer-installed and field-installed wiring.
4. Include features, characteristics, ratings, and factory settings of individual overcurrent protective devices and auxiliary components.

1.03 INFORMATIONAL SUBMITTALS

A. Seismic Qualification Data: Certificates, for magnetic controllers, from manufacturer.

B. Field quality-control reports.

1.04 CLOSEOUT SUBMITTALS

A. Operation and maintenance data.

1.05 QUALITY ASSURANCE

A. Comply with NFPA 70.

PART 2 PRODUCTS

2.01 PERFORMANCE REQUIREMENTS

A. Electrical Components, Devices, and Accessories: Listed and labeled as defined in NFPA 70, by a qualified testing agency, and marked for intended location and use.

B. UL Compliance: Fabricate and label magnetic motor controllers to comply with UL 508 and UL 60947-4-1.

C. NEMA Compliance: Fabricate motor controllers to comply with ICS 2.

D. Seismic Performance: Magnetic controllers shall withstand the effects of earthquake motions determined according to ASCE/SEI 7.

1. The term "withstand" means "the controller will remain in place without separation of any parts when subjected to the seismic forces specified and the unit will be fully operational after the seismic event."

2. Component Importance Factor: 1.5.

2.02 MANUAL MOTOR STARTER SWITCHES

A. Fractional Horsepower Manual Motor Starter Switches: "Quick-make, quick-break" toggle or push-button action; marked to show whether unit is off, on, or tripped.

1. Manufacturers: Subject to compliance with requirements, available manufacturers offering products that may be incorporated into the Work include, but are not limited to, the following:

a. Eaton.
b. General Electric Company.
c. Square D; by Schneider Electric.

2. 120V Single Phase – Single Pole Single throw.

3. 208V or 480V Single Phase – Double Pole Single throw.

4. Configuration: Nonreversing.

5. Overload Relays: Inverse-time-current characteristics; NEMA ICS 2, Class 10 tripping characteristics; heaters matched to nameplate full-load current of actual protected motor; external reset push button; bimetallic type.

6. Pilot Light: Red.

7. Surface mounted, UNO.

2.03 ENCLOSED FULL-VOLTAGE MAGNETIC MOTOR CONTROLLERS

A. Description: Across-the-line start, electrically held, for nominal system voltage of 600-V ac and less.

B. Manufacturers: Subject to compliance with requirements, available manufacturers offering products that may be incorporated into the Work include, but are not limited to, the following:

1. Eaton.

2. General Electric Company.

3. Rockwell Automation, Inc.

4. Square D; by Schneider Electric.

C. Standard: Comply with NEMA ICS 2, general purpose, Class A.

D. Configuration: Nonreversing.

E. Contactor Coils: Pressure-encapsulated type.

1. Operating Voltage: Manufacturer's standard, unless indicated.

F. Control Power (120V ac - Control voltage should be coordinated with the Temperature Controls Contractor):

1. For on-board control power, obtain from integral Control Power Transformer (CPT) with primary and secondary fuses. The CPT shall have capacity to operate integral devices and remotely located pilot, indicating, and control devices.

G. Overload Relays:

1. Solid-State Overload Relay:

    a. Switch or dial selectable for motor-running overload protection.
    b. Sensors in each phase.
    c. Class 10/20 selectable tripping characteristic selected to protect motor against voltage and current unbalance and single phasing.

2.04 COMBINATION MAGNETIC MOTOR CONTROLLERS/DISCONNECT SWITCHES

A. Factory-assembled combination of magnetic controller, OCPD, and disconnecting means.

B. Manufacturers: Subject to compliance with requirements, available manufacturers offering products that may be incorporated into the Work include, but are not limited to, the following:

1. Eaton.

2. General Electric Company.

3. Rockwell Automation, Inc.

4. Square D; by Schneider Electric.

C. Fusible Disconnecting Means:

1. NEMA KS 1, heavy-duty, horsepower-rated, fusible switch with clips or bolt pads to accommodate indicated fuses.

2. Lockable Handle: Accepts three padlocks and interlocks with cover in closed position.

D. Auxiliary Contacts: N.O./N.C., arranged to activate before switch blades open.

2.05 ENCLOSURES

A. Comply with NEMA 250, type designations as indicated on Drawings, complying with environmental conditions at installed location.

1. Dry and Clean Indoor Locations: Type 1.

2. Outdoor Locations: Type 3R.

3. Other Wet or Damp Indoor Locations: Type 4.

4. Indoor Locations Subject to Dust, Falling Dirt, and Dripping Noncorrosive Liquids: Type 12.

B. The construction of the enclosures shall comply with NEMA ICS 6.

2.06 ACCESSORIES

A. General Requirements for Control Circuit and Pilot Devices: NEMA ICS 5; factory installed in controller enclosure cover unless otherwise indicated.

1. Push Buttons, Pilot Lights, and Selector Switches: Heavy-duty or oiltight unless noted otherwise.

2. Control Relays: Auxiliary and adjustable time-delay relays.

B. Motor protection relays shall be with solid-state sensing circuit and isolated output contacts for hardwired connections.

1. Phase-failure.

2. Phase-reversal, with bicolor LED to indicate normal and fault conditions. Automatic reset when phase reversal is corrected.

3. Under/overvoltage, operate when the circuit voltage reaches a preset value, and drop out when the operating voltage drops to a level below the preset value. Include adjustable time-delay setting.

2.07 IDENTIFICATION

A. Controller Nameplates: Laminated acrylic or melamine plastic signs, as described in Section 26 05 53 "Identification for Electrical Systems," for each compartment, mounted with corrosion-resistant screws.

B. Arc-Flash Warning Labels:

1. Comply with requirements in Section 26 05 74 "Overcurrent Protective Device Arc-Flash Study." Produce a 3.5-by-5-inch (89-by-127-mm) self-adhesive equipment label for each work location included in the analysis.

2. Comply with requirements in Section 26 05 53 "Identification for Electrical Systems." Produce a 3.5-by-5-inch (89-by-127-mm) self-adhesive equipment label for each work location included in the analysis. Labels shall be machine printed, with no field-applied markings.

a. The label shall have an orange header with the wording, "WARNING, ARC-FLASH HAZARD," and shall include the following information taken directly from the arc-flash hazard analysis:

1) Location designation.
2) Nominal voltage.
3) Flash protection boundary.
4) Hazard risk category.
5) Incident energy.
6) Working distance.
7) Engineering report number, revision number, and issue date.

b. Labels shall be machine printed, with no field-applied markings.

PART 3 EXECUTION

3.01 INSTALLATION

A. Comply with NECA 1.

B. Wall-Mounted Controllers: Install magnetic controllers on walls with tops at uniform height indicated, and by bolting units to wall or mounting on light-weight structural-steel channels bolted to wall. For controllers not at walls, provide freestanding racks complying with Section 26 05 29 "Hangers and Supports for Electrical Systems" unless otherwise indicated.

C. Comply with requirements for seismic control devices specified in Section 26 05 48.16 "Seismic Controls for Electrical Systems."

D. Maintain minimum clearances and workspace at equipment according to manufacturer's written instructions and NFPA 70.

E. Wiring within Enclosures: Bundle, lace, and train conductors to terminal points with no excess and without exceeding manufacturer's limitations on bending radii. Install lacing bars and distribution spools.

F. Temporary Lifting Provisions: Remove temporary lifting eyes, channels, and brackets and temporary blocking of moving parts from enclosures and components.

G. Install fuses in each fusible-switch enclosed controller.

H. Install fuses in control circuits if not factory installed. Comply with requirements in Section 26 28 13 "Fuses."

I. Install heaters in thermal overload relays. Select heaters based on actual nameplate full-load amperes after motors have been installed.

J. Setting of Overload Relays: Select and set overloads on the basis of full-load current rating as shown on motor nameplate. Adjust setting value for special motors as required by NFPA 70 for motors that are high-torque, high-efficiency, and so on.

3.02 IDENTIFICATION

A. Identify system components, wiring, cabling, and terminals. Comply with requirements for identification specified in Section 26 05 53 "Identification for Electrical Systems."

1. Identify field-installed conductors, interconnecting wiring, and components; provide warning signs.

2. Label each enclosure with engraved nameplate.

3. Label each enclosure-mounted control and pilot device.

3.03 FIELD QUALITY CONTROL

A. Perform tests and inspections.

B. Tests and Inspections:

1. Comply with the provisions of NFPA 70B, "Testing and Test Methods" Chapter.

2. Visual and Mechanical Inspection

a. Compare equipment nameplate data with drawings and specifications.
b. Inspect physical and mechanical condition.
c. Inspect anchorage, alignment, and grounding.
d. Verify the unit is clean.
e. Inspect contactors:

1) Verify mechanical operation.
2) Verify contact gap, wipe, alignment, and pressure are according to manufacturer's published data.

f. Motor-Running Protection:

1) Verify overload element rating is correct for its application.
2) If motor-running protection is provided by fuses, verify correct fuse rating.

g. Verify appropriate lubrication on moving current-carrying parts and on moving and sliding surfaces.

C. Motor controller will be considered defective if it does not pass tests and inspections.

D. Prepare test and inspection reports.

3.04 SYSTEM FUNCTION TESTS

A. System function tests shall prove the correct interaction of sensing, processing, and action devices. Perform system function tests after field quality control tests have been completed and all components have passed specified tests.

1. Perform tests for the purpose of evaluating performance of integral components and their functioning as a complete unit within design requirements and manufacturer's published data.

2. Verify the correct operation of interlock safety devices for fail-safe functions in addition to design function.

3. Verify the correct operation of sensing devices, alarms, and indicating devices.

B. Motor controller will be considered defective if it does not pass the system function tests and inspections.

C. Prepare test and inspection reports.

3.05 DEMONSTRATION

A. Train Owner's maintenance personnel to adjust, operate, and maintain enclosed controllers.

END OF SECTION 26 29 13.03

(This page intentionally left blank)

PART 1 GENERAL

1.01 SUMMARY

A. Section includes field-mounted SPDs for low-voltage (120 to 600 V) power distribution and control equipment.

1.02 ACTION SUBMITTALS

A. Product Data: For each type of product.

1. Include rated capacities, operating characteristics, electrical characteristics, and furnished specialties and accessories.

2. Copy of UL Category Code VZCA certification, as a minimum, listing the tested values for VPRs, $I_{NOMINAL}$ ratings, MCOVs, type designations, OCPD requirements, model numbers, system voltages, and modes of protection.

1.03 INFORMATIONAL SUBMITTALS

A. Field quality-control reports.

B. Sample Warranty: For manufacturer's special warranty.

1.04 CLOSEOUT SUBMITTALS

A. Maintenance data.

1.05 WARRANTY

A. Manufacturer's Warranty: Manufacturer agrees to replace or replace SPDs that fail in materials or workmanship within specified warranty period.

1. Warranty Period: Five years from date of Substantial Completion.

PART 2 PRODUCTS

2.01 GENERAL SPD REQUIREMENTS

A. SPD with Accessories: Listed and labeled as defined in NFPA 70, by a qualified testing agency, and marked for intended location and application.

B. Comply with NFPA 70.

C. Comply with UL 1449.

D. MCOV of the SPD shall be the nominal system voltage.

2.02 EXTERIOR MOUNTED 'LIGHTNING ARRESTOR' SPD

A. Manufacturers: Subject to compliance with requirements, available manufacturers offering products that may be incorporated into the Work include, but are not limited to the following:

1. Square D.

2. General Electric Company.

3. Eaton.

B. SPD:

1. Comply with UL 1449, Type 1.

2. Designed to be installed without OCPD.

3. NEMA 4X enclosure with nipple mount for installation on outside of exterior main disconnect switch.

4. 15" #14 AWG connection leads (cut as necessary to maintain shortest lead length possible).

C. Characteristics and protection modes and UL 1449 VPR for grounded wye circuits with 480Y/277 V, three-phase, four-wire circuits shall be as follows:

1. Maximum Continuous Operating Voltage (MCOV):

a. Line to Neutral: 420 V.
b. Line to Line: 840 V.

2. Peak Voltage Let-Through (Vpk):

a. Line to Neutral: 1500 V.
b. Line to Line: 2500 V.

3. Peak Surge Current Rating per Phase: 40 kA.

4. Nominal Current Rating (I-nom): 10 kA

5. Short Circuit Current Rating (SCCR): 200 kA.

D. Characteristics and protection modes and UL 1449 VPR for grounded wye circuits with 208Y/120 V, three-phase, four-wire circuits shall be as follows:

1. Maximum Continuous Operating Voltage (MCOV):

a. Line to Neutral: 180 V.
b. Line to Line: 360 V.

2. Peak Voltage Let-Through (Vpk):

a. Line to Neutral: 700 V.
b. Line to Line: 1200 V.

3. Peak Surge Current Rating per Phase: 40 kA.

4. Nominal Current Rating (I-nom): 10 kA

5. Short Circuit Current Rating (SCCR): 200 kA.

E. Characteristics and protection modes and UL 1449 VPR for 240/120 V, single-phase, three-wire circuits shall be as follows:

1. Maximum Continuous Operating Voltage (MCOV):

a. Line to Neutral: 150 V.
b. Line to Line: 300 V.

2. Peak Voltage Let-Through (Vpk):

a. Line to Neutral: 700 V.
b. Line to Line: 1200 V.

3. Peak Surge Current Rating per Phase: 36 kA.

4. Nominal Current Rating (I-nom): 10 kA

5. Short Circuit Current Rating (SCCR): 25 kA.

2.03 SERVICE ENTRANCE AND TRANSFER SWITCH SUPPRESSOR

A. Manufacturers: Subject to compliance with requirements, available manufacturers offering products that may be incorporated into the Work include, but are not limited to the following:

1. Advanced Protection Technologies Inc. (APT).

2. Current Technology Inc.

3. Eaton.

4. General Electric Company.

5. Leviton Manufacturing Co., Inc.

6. Liebert; a brand of Vertiv.

7. Square D.

B. SPDs: Comply with UL 1449, Type 1.

1. Permanently connected, hard-wired SPD that can be installed in both locations noted:

a. Between the secondary of the service transformer and the line side of the main service equipment overcurrent protective device.
b. On the load side of the main service equipment.

2. SPDs with the following features and accessories:

a. Internal thermal protection that disconnects the SPD before damaging internal suppressor components.
b. Indicator light display for protection status.

C. Features and Accessories:

1. Internal thermal protection that disconnects the SPD before damaging internal suppressor components.

2. Indicator light display for protection status.

3. Surge counter.

D. Peak Surge Current Rating: The minimum single-pulse surge current withstand rating per phase shall not be less than 200 kA. The peak surge current rating shall be the arithmetic sum of the ratings of the individual MOVs in a given mode.

E. Characteristics and protection modes and UL 1449 VPR for grounded wye circuits with 480Y/277 V, three-phase, four-wire circuits shall be as follows:

1. Maximum Continuous Operating Voltage (MCOV):

a. Line to Neutral: 420 V.

b. Line to Line: 840 V.

2. Peak Voltage Let-Through (Vpk):

a. Line to Ground: 1200 V.
b. Line to Neutral: 1200 V.
c. Line to Line: 2000 V.

3. Nominal Current Rating (I-nom): 20 kA

4. Short Circuit Current Rating (SCCR): 100 kA.

F. Characteristics and protection modes and UL 1449 VPR for grounded wye circuits with 208Y/120 V, three-phase, four-wire circuits shall be as follows:

1. Maximum Continuous Operating Voltage (MCOV):

a. Line to Neutral: 180 V.
b. Line to Line: 360 V.

2. Peak Voltage Let-Through (Vpk):

a. Line to Ground: 700 V.
b. Line to Neutral: 700 V.
c. Line to Line: 1000 V.

3. Nominal Current Rating (I-nom): 20 kA

4. Short Circuit Current Rating (SCCR): 100 kA.

G. Characteristics and protection modes and UL 1449 VPR for 240/120 V, single-phase, three-wire circuits shall be as follows:

1. Maximum Continuous Operating Voltage (MCOV):

a. Line to Neutral: 150 V.
b. Line to Line: 300 V.

2. Peak Voltage Let-Through (Vpk):

a. Line to Ground: 700 V.
b. Line to Neutral: 700 V.
c. Line to Line: 1000 V.

3. Nominal Current Rating (I-nom): 20 kA

4. Short Circuit Current Rating (SCCR): 25 kA.

2.04 PANEL SUPPRESSORS

A. Manufacturers: Subject to compliance with requirements, available manufacturers offering products that may be incorporated into the Work include, but are not limited to the following:

1. Advanced Protection Technologies Inc. (APT).

2. Current Technology Inc.

3. Eaton.

4. General Electric Company.

5. Leviton Manufacturing Co., Inc.

6. Liebert; a brand of Vertiv.

7. Square D.

B. SPDs: Comply with UL 1449, Type 2.

1. Permanently connected, hard-wired SPD intended for installation on the load side of the main service equipment overcurrent protective device.

2. Include LED indicator lights for power and protection status.

3. Internal thermal protection that disconnects the SPD before damaging internal suppressor components.

C. Peak Surge Current Rating: The minimum single-pulse surge current withstand rating per phase shall not be less than 100 kA. The peak surge current rating shall be the arithmetic sum of the ratings of the individual MOVs in a given mode.

D. Characteristics and protection modes and UL 1449 VPR for grounded wye circuits with 480Y/277 V, three-phase, four-wire circuits shall be as follows:

1. Maximum Continuous Operating Voltage (MCOV):

a. Line to Neutral: 420 V.
b. Line to Line: 840 V.

2. Peak Voltage Let-Through (Vpk):

a. Neutral to Ground: 1200 V.

b. Line to Ground: 1200 V.
c. Line to Neutral: 1200 V.
d. Line to Line: 2000 V.

3. Nominal Current Rating (I-nom): 20 kA

4. Short Circuit Current Rating (SCCR): 100 kA.

E. Characteristics and protection modes and UL 1449 VPR for grounded wye circuits with 208Y/120 V, three-phase, four-wire circuits shall be as follows:

1. Maximum Continuous Operating Voltage (MCOV):

a. Line to Neutral: 180 V.
b. Line to Line: 360 V.

2. Peak Voltage Let-Through (Vpk):

a. Neutral to Ground: 700 V.
b. Line to Ground: 700 V.
c. Line to Neutral: 700 V.
d. Line to Line: 1200 V.

3. Nominal Current Rating (I-nom): 20 kA

4. Short Circuit Current Rating (SCCR): 100 kA.

F. Characteristics and protection modes and UL 1449 VPR for 240/120 V, single-phase, three-wire circuits shall be as follows:

1. Maximum Continuous Operating Voltage (MCOV):

a. Line to Neutral: 150 V.
b. Line to Line: 300 V.

2. Peak Voltage Let-Through (Vpk):

a. Neutral to Ground: 700 V.
b. Line to Ground: 700 V.
c. Line to Neutral: 700 V.
d. Line to Line: 1200 V.

3. Nominal Current Rating (I-nom): 20 kA

4. Short Circuit Current Rating (SCCR): 25 kA.

2.05 ENCLOSURES

A. Install integral within switchgear/panelboard.

B. Indoor Enclosures: NEMA 250, Type 1.

C. Outdoor Enclosures: NEMA 250, Type 3R.

PART 3 EXECUTION

3.01 INSTALLATION

A. Comply with NECA 1.

B. Install an OCPD or disconnect as required to comply with the UL listing of the SPD.

C. Install SPDs with conductors between suppressor and points of attachment as short and straight as possible, and adjust circuit-breaker positions to achieve shortest and straightest leads. Do not splice and extend SPD leads unless specifically permitted by manufacturer. Do not exceed manufacturer's recommended lead length. Do not bond neutral and ground.

D. Use crimped connectors and splices only. Wire nuts are unacceptable.

E. Complete startup checks according to manufacturer's written instructions. Energize SPDs after power system has been energized, stabilized, and tested.

3.02 FIELD QUALITY CONTROL

A. Perform the following tests and inspections with the assistance of a factory-authorized service representative.

1. Compare equipment nameplate data for compliance with Drawings and Specifications.

2. Inspect anchorage, alignment, grounding, and clearances.

3. Verify that electrical wiring installation complies with manufacturer's written installation requirements.

B. An SPD will be considered defective if it does not pass tests and inspections.

C. Prepare test and inspection reports.

3.03 DEMONSTRATION

A. Train Owner's maintenance personnel to operate and maintain SPDs.

END OF SECTION 26 43 13

(This page intentionally left blank)

PART 1 GENERAL

1.01 SUMMARY

A. Section Includes:

1. Interior and exterior lighting fixtures that are designed for and exclusively use LED lamp technology.

2. Emergency power units.

3. Exit signs.

4. Emergency lighting units.

5. Luminaire supports.

B. Related Sections:

1. Section 26 09 23 "Lighting Control Devices" for automatic control of lighting, including time switches, photoelectric relays, occupancy sensors, and multipole lighting relays and contactors.

2. Section 26 27 26 "Wiring Devices".

1.02 DEFINITIONS

A. CCT: Correlated color temperature.

B. CRI: Color Rendering Index.

C. Fixture: See "Luminaire."

D. IP: International Protection or Ingress Protection Rating.

E. LED: Light-emitting diode.

F. Lumen: Measured output of lamp and luminaire, or both.

G. Luminaire: Complete lighting unit, including lamp, reflector, and housing.

H. THD: Total Harmonic Distortion.

1.03 PRIOR APPROVAL

A. Prior approvals are not required unless otherwise noted on the Luminaire Schedule.

1. All material supplied to the project must meet or exceed the quality, performance, and have similar features to the product originally specified. It is the contractor's responsibility to ensure that substituted equipment matches the exterior dimensions, weight, and configuration of the specified equipment.

1.04 ACTION SUBMITTALS

A. Product Data: For each type of lighting fixture, arranged in order of fixture designation. Include data on features, accessories, finishes, and the following:

1. Physical description of lighting fixture including dimensions.

2. Ballast/Driver, including THD.

3. Emergency lighting units including battery and charger.

4. Energy-efficiency data.

5. Life, output (lumens, CCT, and CRI), and energy-efficiency data.

6. Fixture UL/ETL rating.

7. Design Lights Consortium (DLC) certification and/or Energy Star rating.

8. Photometric data and adjustment factors based on laboratory tests, complying with IESNA Lighting Measurements Testing & Calculation Guides, of each lighting fixture type. The adjustment factors shall be for lamps, ballasts, and accessories identical to those indicated for the lighting fixture as applied in this Project.

a. Manufacturer Certified Data: Photometric data shall be certified by a manufacturer's laboratory with a current accreditation under the National Voluntary Laboratory Accreditation Program for Energy Efficient Lighting Products.

9. Color samples (if color is to be chosen by architect/engineer).

10. Foot-candle calculations for spot lights and flood lights.

11. List of all parts necessary for particular installation configuration.

B. Shop Drawings: For nonstandard or custom luminaires.

1. Include plans, elevations, sections, and mounting and attachment details.

2. Include details of luminaire assemblies. Indicate dimensions, weights, loads, required clearances, method of field assembly, components, and location and size of each field connection.

3. Include diagrams for power, signal, and control wiring.

1.05 INFORMATIONAL SUBMITTALS

A. Seismic Qualification Certificates: For luminaires, accessories, and components, from manufacturer.

B. Sample warranty.

1.06 CLOSEOUT SUBMITTALS

A. Operation and Maintenance Data.

1.07 MAINTENANCE MATERIAL SUBMITTALS

A. Furnish extra materials that match products installed and that are packaged with protective covering for storage and identified with labels describing contents.

1. Plastic Diffusers and Lenses: One for every 100 of each type and rating installed. Furnish at least one of each type.

2. Fixture-mounted, emergency battery pack: One for every 50 emergency lighting unit.

3. Ballasts/Drivers: One for every 100 of each type and rating installed. Furnish at least one of each type.

4. Globes and Guards: One for every 20 of each type and rating installed. Furnish at least one of each type.

1.08 QUALITY ASSURANCE

A. Luminaire Photometric Data Testing Laboratory Qualifications: Provided by manufacturers' laboratories that are accredited under the National Volunteer Laboratory Accreditation Program for Energy Efficient Lighting Products.

B. Electrical Components, Devices, and Accessories: Listed and labeled as defined in NFPA 70, by a qualified testing agency, and marked for intended location and application.

C. Comply with NFPA 70.

1.09 COORDINATION

A. Coordinate layout and installation of lighting fixtures and suspension system with other construction that penetrates ceilings or is supported by them, including HVAC equipment, fire-suppression system, and partition assemblies.

B. Fire rated assemblies: Fixtures installed in fire rated assemblies shall maintain the fire rating of said assembly. Contractor is required to coordinate with Architectural draws to verify assembly ratings.

C. Insulated ceiling space: Fixtures installed in an insulated ceiling be IC rated or manufacturer recommended clearances between fixture and insulation. Contractor is required to coordinate with Architectural draws to verify insulated areas above ceilings.

1.10 WARRANTY

A. Warranty: Manufacturer and Installer agree to repair or replace components of luminaires that fail in materials or workmanship within specified warranty period.

B. Warranty Period: Five years from date of Substantial Completion.

C. Special Warranty for Emergency Lighting Batteries: Manufacturer's standard form in which manufacturer of battery-powered emergency lighting unit agrees to repair or replace components of rechargeable batteries that fail in materials or workmanship within specified warranty period.

PART 2 PRODUCTS

2.01 PERFORMANCE REQUIREMENTS

A. Seismic Performance: Luminaires shall withstand the effects of earthquake motions as noted in 26 05 48.16, “Seismic Controls for Electrical Systems”.

B. Seismic Performance: Luminaires and lamps shall be labeled vibration and shock resistant.

1. The term "withstand" means "the luminaire will remain in place without separation of any parts when subjected to the seismic forces

specified and the luminaire will be fully operational during and after the seismic event."

2. Component Importance Factor: 1.5.

2.02 GENERAL LUMINAIRE REQUIREMENTS

A. Electrical Components, Devices, and Accessories: Listed and labeled as defined in NFPA 70, by a qualified testing agency, and marked for intended location and application.

B. Standards - Where noted on plans, comply with the following:

1. ENERGY STAR or Design Lights Consortium (DLC) certified.

2. NRTL Compliance: Luminaires for hazardous locations shall be listed and labeled for indicated class and division of hazard by an NRTL.

3. UL Listing: Listed for damp and/or wet locations as required.

4. Recessed luminaires shall comply with NEMA LE 4.

C. Indoor fixtures shall have a minimum CRI of 80 UNO and a CCT of 4100 K UNO.

D. Outdoor fixtures shall have a minimum CRI of 65 UNO and a CCT of 4100 K UNO.

E. Outdoor fixtures shall have mounting type and distribution as noted on plans.

F. Minimum rated LED lamp life of 50,000 hours to L70.

G. Lamps dimmable from 100 percent to 10 percent of maximum light output.

H. Internal ballast/driver, UNO.

I. Nominal Operating Voltage: As noted on the plans.

J. Lens Thickness: At least 0.125 inch minimum UNO.

K. Reflecting surfaces shall have minimum reflectance as follows unless otherwise indicated:

1. White Surfaces: 85 percent.

2. Specular Surfaces: 83 percent.

3. Diffusing Specular Surfaces: 75 percent.

L. Lens and Refractor Gaskets for Exterior Luminaires: Use heat- and aging-resistant resilient gaskets to seal and cushion lenses and refractors in luminaire doors.

M. Source Limitations: For luminaires, obtain each color, grade, finish, type, and variety of luminaire from single source with resources to provide products of consistent quality in appearance and physical properties.

N. Housings:

1. Rigidly formed, light-tight enclosure that will not warp, sag, or deform in use.

2. Provide weather-tight enclosure with filter/breather for enclosed exterior luminaires.

O. Metal Parts:

1. Free of burrs and sharp corners and edges.

2. Indoor applications: Sheet metal components shall be steel unless otherwise indicated.

3. Exterior applications: Sheet metal components shall be corrosion-resistant aluminum.

4. Form and support to prevent warping and sagging

P. Doors, Frames, and Other Internal Access: Smooth operating, free of light leakage under operating conditions, and designed to permit relamping without use of tools. Designed to prevent doors, frames, lenses, diffusers, and other components from falling accidentally during relamping and when secured in operating position. Doors shall be removable for cleaning or replacing lenses.

Q. Diffusers, and Globes - Tempered glass, acrylic or polycarbonate as noted on plans.

1. Acrylic: One hundred percent virgin acrylic plastic, with high resistance to yellowing and other changes due to aging, exposure to heat, and UV radiation.

a. Lens Thickness: At least 0.125 inch (3.175 mm) minimum unless otherwise indicated.
b. UV stabilized.

2. Glass: Annealed crystal glass unless otherwise indicated.

2.03 METAL FINISHES

A. Variations in finishes are unacceptable in the same piece. Variations in finishes of adjoining components are acceptable if they are within the range of approved Samples and if they can be and are assembled or installed to minimize contrast.

B. Source Limitations: For luminaires, obtain each color, grade, finish, type, and variety of luminaire from single source with resources to provide products of consistent quality in appearance and physical properties.

C. Factory-Applied, powder-coat finish, UNO, with standard color chosen by Architect or as noted on plans.

1. Factory-Applied Finish for Aluminum Luminaires: Comply with NAAMM's "Metal Finishes Manual for Architectural and Metal Products" for recommendations for applying and designating finishes.

a. Finish designations prefixed by AA comply with the system established by the Aluminum Association for designating aluminum finishes.
b. Class I, Color-Anodic Finish: AA-M32C22A42/A44 (Mechanical Finish: Medium satin; Chemical Finish: Etched, medium matte; Anodic Coating: Architectural Class I, integrally colored or electrolytically deposited color coating 0.018 mm or thicker), complying with AAMA 611.

2. Factory-Applied Finish for Steel Luminaires: Comply with NAAMM's "Metal Finishes Manual for Architectural and Metal Products" for recommendations for applying and designating finishes.

a. Surface Preparation: Clean surfaces to comply with SSPC-SP 1, to remove dirt, oil, grease, and other contaminants that could impair paint bond. Grind welds and polish surfaces to a smooth, even finish. Remove mill scale and rust, if present, from uncoated steel, complying with SSPC-SP 5/NACE No. 1 or SSPC-SP 8.
b. Exterior Surfaces: Manufacturer's standard finish consisting of one or more coats of primer and two finish coats of high-gloss, high-build polyurethane enamel.

2.04 LED ASSEMBLIES

A. Products UL rated for 40 degree C (104 degrees F) ambient environments.

B. Minimum 4000K color temperature unless noted otherwise in the drawings.

C. 50,000 hour fixture life including driver, 5 year warranty.

D. All products compliant with EISNA LM-79 and LM-80 standards.

2.05 EMERGENCY POWER UNIT

A. Internal Type: Self-contained, modular, battery-inverter unit, factory mounted within lighting fixture body and compatible with ballast. Comply with UL 924.

1. Emergency Connection: Operate all or a portion of LED lamps continuously at an output of 1100 lumens. Connect unswitched circuit to battery-inverter unit and switched circuit to fixture ballast.

2. Operation: Relay automatically turns lamp on when power-supply circuit voltage drops to 80 percent of nominal voltage or below. Lamp automatically disconnects from battery when voltage approaches deep-discharge level. When normal voltage is restored, relay disconnects lamps from battery, and battery is automatically recharged and floated on charger.

3. Environmental Limitations: Rate equipment for continuous operation under the following conditions unless otherwise indicated:

a. Ambient Temperature: Less than 0 deg F (minus 18 deg C) or exceeding 104 deg F (40 deg C), with an average value exceeding 95 deg F (35 deg C) over a 24-hour period.
b. Ambient Storage Temperature: Not less than minus 4 deg F (minus 20 deg C) and not exceeding 140 deg F (60 deg C).
c. Humidity: More than 95 percent (condensing).
d. Altitude: Exceeding 3300 feet (1000 m).

4. Test Push Button and Indicator Light: Visible and accessible without opening fixture or entering ceiling space.

a. Push Button: Push-to-test type, in unit housing, simulates loss of normal power and demonstrates unit operability.
b. Indicator Light: LED indicates normal power on. Normal glow indicates trickle charge; bright glow indicates charging at end of discharge cycle.

5. Battery: Sealed, maintenance-free, nickel-cadmium type.

6. Charger: Fully automatic, solid-state, constant-current type with sealed power transfer relay.

7. Integral Self-Test: Factory-installed electronic device automatically initiates code-required test of unit emergency operation at required intervals. Test failure is annunciated by an integral audible alarm and a flashing red LED.

B. External Type: Self-contained, modular, battery-inverter unit, suitable for powering LED lamps, remote mounted from lighting fixture. Comply with UL 924.

1. Emergency Connection: Connect unswitched circuit to battery-inverter unit and switched circuit to fixture ballast.

2. Battery: Sealed, maintenance-free, nickel-cadmium type.

3. Charger: Fully automatic, solid-state, constant-current type.

4. Housing: NEMA 250, Type 1 enclosure. Listed for installation remote from luminaire. Remote assembly shall be located no more than half the distance recommended by the emergency power unit manufacturer

5. Test Push Button: Push-to-test type, in unit housing, simulates loss of normal power and demonstrates unit operability.

6. LED Indicator Light: Indicates normal power on. Normal glow indicates trickle charge; bright glow indicates charging at end of discharge cycle.

7. Integral Self-Test: Factory-installed electronic device automatically initiates code-required test of unit emergency operation at required intervals. Test failure is annunciated by an integral audible alarm and a flashing red LED.

2.06 EXIT SIGNS

A. General Requirements for Exit Signs: Comply with UL 924; for sign colors, visibility, luminance, and lettering size, comply with authorities having jurisdiction.

B. Internally Lighted Signs:

1. Lamps for AC Operation: LEDs, 50,000 hours minimum rated lamp life.

2. Self-Powered Exit Signs (Battery Type): Integral automatic charger in a self-contained power pack.

a. Battery: Sealed, maintenance-free, nickel-cadmium type.
b. Charger: Fully automatic, solid-state type with sealed transfer relay.
c. Operation: Relay automatically energizes lamp from battery when circuit voltage drops to 80 percent of nominal voltage or below. When normal voltage is restored, relay disconnects lamps from battery, and battery is automatically recharged and floated on charger.
d. Test Push Button: Push-to-test type, in unit housing, simulates loss of normal power and demonstrates unit operability.
e. LED Indicator Light: Indicates normal power on. Normal glow indicates trickle charge; bright glow indicates charging at end of discharge cycle.
f. Integral Self-Test: Factory-installed electronic device automatically initiates code-required test of unit emergency operation at required intervals. Test failure is annunciated by an integral audible alarm and a flashing red LED.

2.07 EMERGENCY LIGHTING UNITS

A. General Requirements for Emergency Lighting Units: Self-contained units complying with UL 924.

1. Battery: Sealed, maintenance-free, lead-acid type.

2. Charger: Fully automatic, solid-state type with sealed transfer relay.

3. Operation: Relay automatically turns lamp on when power-supply circuit voltage drops to 80 percent of nominal voltage or below. Lamp automatically disconnects from battery when voltage approaches deep-discharge level. When normal voltage is restored, relay disconnects lamps from battery, and battery is automatically recharged and floated on charger.

4. Test Push Button: Push-to-test type, in unit housing, simulates loss of normal power and demonstrates unit operability.

5. LED Indicator Light: Indicates normal power on. Normal glow indicates trickle charge; bright glow indicates charging at end of discharge cycle.

6. Integral Self-Test: Factory-installed electronic device automatically initiates code-required test of unit emergency operation at required intervals. Test failure is annunciated by an integral audible alarm and a flashing red LED.

2.08 LUMINAIRE SUPPORTS

A. Comply with requirements in Section 26 05 29 "Hangers and Supports for Electrical Systems" for channel and angle iron supports and nonmetallic channel and angle supports.

B. Single-Stem Hangers: 1/2-inch (13-mm) steel tubing with swivel ball fittings and ceiling canopy. Finish same as luminaire.

C. Twin-Stem Hangers: Two, 1/2-inch (13-mm) steel tubes with single canopy designed to mount a single fixture. Finish same as fixture.

D. Wires: ASTM A 641/A 641 M, Class 3, soft temper, zinc-coated steel, 12 gauge (2.68 mm).

E. Rod Hangers: 3/16-inch (5-mm) minimum diameter, cadmium-plated, threaded steel rod.

F. Hook Hangers: Integrated assembly matched to luminaire, line voltage, and equipment with threaded attachment, cord, and locking-type plug.

2.09 SCREW-IN BASE FIXTURES

A. Fixture shall be compatible with common type Medium Base E26 bulb.

B. Fixture shall be dimming compatible and compatible with dimmable LED type bulb.

C. Lamp shall be compatible with dimmer switch to allow full, flicker-free dimming throughout the lamp’s full dimming range.

D. Comply with UL1598 and comply with minimum performance requirements for retrofit lamps - NEMA SSL 4.

E. SPARE LAMPS - Spare lamps shall be provided in quantities of 10% of total lamps of each screw-in base type installed. Quantity of spares shall not be less than four (4) spare lamps for any one lamp type.

PART 3 EXECUTION

3.01 GENERAL INSTALLATION

A. Comply with NECA 1.

B. Install luminaires level, plumb, and square with ceilings and walls unless otherwise indicated.

C. Use fastening methods and materials selected to resist seismic forces defined for the application and approved by manufacturer.

D. Fasten luminaire to structural support.

E. Supports:

1. Sized and rated for luminaire weight, and weight of emergency power unit where applicable.

2. Able to maintain luminaire position after cleaning, while relamping and when testing emergency power unit.

3. Provide support for luminaire and emergency power unit without causing deflection of ceiling or wall.

4. Luminaire-mounting devices shall be capable of supporting a horizontal force of 100 percent of luminaire and emergency power unit weight and vertical force of 400 percent of fixture weight.

5. Use fastening methods and materials selected to resist seismic forces defined for the application and approved by manufacturer.

F. Flush-Mounted Luminaire Support: Secured to outlet box.

G. Wall-Mounted Luminaire Support:

1. Attached to structural members in walls or to a minimum 20 gauge backing plate attached to wall structural members.

2. Do not attach luminaires directly to gypsum board.

H. Ceiling-Mounted Luminaire Support:

1. Secure to any required outlet box and attach to structural member in ceiling or to a minimum 20 gauge backing plate attached to ceiling structural members.

2. Do not attach luminaires directly to gypsum board.

3. Provide offset from ceiling as required by luminaire manufacturer.

4. Secure emergency power unit using approved fasteners in a minimum of four locations, spaced near corners of emergency power unit.

I. Suspended Luminaire Support:

1. Pendants and Rods: Where longer than 48 inches (1200 mm), brace to limit swinging.

2. Stem-Mounted, Single-Unit Luminaires: Suspend with twin-stem hangers. Support with approved outlet box and accessories that hold stem and provide damping of luminaire oscillations. Support outlet box vertically to building structure using approved devices.

3. Continuous Rows of Luminaires: Use tubing or stem for wiring at one point and tubing or rod for suspension for each unit length of luminaire chassis, including one at each end.

4. Do not use ceiling grid as support for pendant luminaires. Connect support wires or rods to building structure.

J. Lay-in Ceiling Lighting Fixtures Supports: Use grid as a support element.

1. Install ceiling support system rods or wires, independent of the ceiling suspension devices, for each fixture. Locate not more than 6 inches (150 mm) from lighting fixture corners.

2. Support Clips: Fasten to lighting fixtures and to ceiling grid members at or near each fixture corner with clips that are UL listed for the application.

3. Fixtures of Sizes Less Than Ceiling Grid: Install as indicated on reflected ceiling plans or center in acoustical panel, and support fixtures independently with at least two 3/4-inch (20-mm) metal channels spanning and secured to ceiling tees.

4. Install at least two independent support rods or wires from structure to a tab on lighting fixture. Wire or rod shall have breaking strength of the weight of fixture at a safety factor of 3.

K. Comply with requirements in Section 26 05 19 "Low-Voltage Electrical Power Conductors and Cables" for wiring connections.

L. Temporary Lighting: If it is necessary, and approved by Architect, to use permanent luminaires for temporary lighting, install and energize the

minimum number of luminaires necessary. When construction is sufficiently complete, remove the temporary luminaires, disassemble, clean thoroughly and reinstall.

M. Remote Mounting of Ballasts/Drivers: Distance between the driver and fixture shall not exceed that recommended by luminaire manufacturer.

3.02 IDENTIFICATION

A. Install labels with panel and circuit numbers on concealed junction and outlet boxes. Comply with requirements for identification specified in Section 26 05 53 "Identification for Electrical Systems."

3.03 INSULATED CEILING SPACES

A. Provide IC rated fixture assemblies or manufacturer recommended clearances between fixture and insulation.

3.04 FIRE RATED ASSEMBLIES

A. Provide fire rated fixture assemblies or a third party fire rated cover.

1. Fire rated covers

a. Provide manufacturer recommended clearances for all non IC rated fixtures.

3.05 FIELD QUALITY CONTROL

A. Perform the following tests and inspections:

1. Operational Test: After installing luminaires, switches, and accessories, and after electrical circuitry has been energized, test units to confirm proper operation.

2. Test for Emergency Lighting: Interrupt power supply to demonstrate proper operation. Verify transfer from normal power to battery power and retransfer to normal.

B. Luminaire will be considered defective if it does not pass operation tests and inspections.

C. Prepare test and inspection reports.

END OF SECTION 26 51 00

PART 1 GENERAL

1.01 WORK INCLUDED

A. The work of this section consists of the clearing, removal and disposal of vegetation; including trees, stumps and roots; abandoned or to be abandoned structures; fences and debris or other objectionable materials that will interfere with the construction of this project.

B. This work shall also include the preservation from injury or defacement of all vegetation and existing objects designated to remain or not specifically designated to be removed, as shown or as specified herein.

C. Review with the Engineer the location, limits, and methods to be used prior to commencing the work under this section.

1.02 GENERAL

A. See Volume 1 and Division 01 00 00, GENERAL REQUIREMENTS, which contain information and requirements that apply to the work specified herein and are mandatory for this project.

1.03 DISPOSAL REQUIREMENTS

A. The Contractor shall confirm an acceptable method of disposal with the Owner before proceeding. Also see Volume 1 for environmental control requirements.

PART 2 PRODUCTS

2.01 GENERAL

A. Provide all materials, suitable and in adequate quantity, required to accomplish the work as specified herein.

PART 3 EXECUTION

3.01 CLEARING

A. Definition: Clearing shall consist of cutting, removing, and disposing of trees, snags, stumps, shrubs, brush, limbs, and other vegetative growth, and shall be performed in such a manner as to remove all evidence of their presence from the surface and shall be inclusive of sticks and branches greater than 2 inches in diameter or thickness. Clearing shall also include the removal and disposal of trash piles, rubbish, miscellaneous concrete, and fencing; and the preservation of trees, shrubs, and vegetative growth which are not designated for removal.

B. Clearing for the construction of structures, areas of grading, or earthwork shall extend not more than 30 feet beyond the construction limits as shown on the Drawings. Clearing for the construction of pipelines shall not exceed 10 feet on each side of pipe centerline as staked for construction or outside the pipeline easement boundary, whichever is less. Remove trees, brush, and vegetation within the described limits only if needed; and if encountered, remove structures, valve boxes, manholes, walls, slabs, foundations, posts, or debris.

3.02 GRUBBING

A. Definition: Grubbing shall consist of the removal and disposal of wood or root matter below the ground surface remaining after clearing and shall include structures, stumps, trunks, roots, or root systems greater than 2 inches in diameter or thickness to a depth of 12 inches below the ground surface.

B. In areas of grading, excavation or embankment, remove topsoil, stumps, roots, structures or foundations a minimum of 12 inches below finish grade. Topsoil in cultivated areas shall be removed to the full depth of the topsoil or to 12 inches, whichever is less, and shall not be mixed with foreign materials. Topsoil shall be stockpiled on-site and protected from erosion. Remove any excess topsoil from the site that is not intended, or needed for, reuse and dispose of it on the Section 10 WRP site in an area designated by the Owner. Backfill all grubbing holes with approved material and compact to approximately the same density as existing surrounding soil.

3.03 SALVAGE AND PROTECTION

A. Miscellaneous timber, roots, or other debris found at the site shall become the property of the Contractor for his disposal off the project site as specified below.

B. The Contractor shall protect benchmarks, survey control points, and existing work from damage or displacement.

C. The Contractor shall maintain a designated site access for vehicle traffic.

D. The Contractor shall protect existing chain link fences and posts, fence wire, wood posts, metal posts and any other structures not to be removed from the project site.

E. The Contractor shall protect existing trees, plant growth, and other features not shown to be removed or shown to remain as final landscaping.

F. Locate, identify, and protect utilities indicated to remain from damage.

3.04 DISPOSAL OF WASTE MATERIAL

A. Wood and other combustible materials that become the property of the Contractor shall be disposed of or burned by the Contractor at offsite locations, and with means and methods, approved by local regulatory officials. No burning shall be allowed at the project site. Any burning operations off-site shall be subject to all laws governing such operations. The Contractor shall be responsible for any damage to life and/or property caused by fire resulting from any phase of construction. A copy of the Contractor's burning permit shall be sent to the Engineer. Noncombustible material shall become the property of the Contractor and shall be removed from the site of work, unless an approved waste site is authorized by the Owner.

B. It shall be the Contractor's responsibility to select an acceptable method of disposal off the project site for vegetation, large rocks, or debris not salvageable. The Contractor shall be responsible for obtaining the necessary authorization from the Owner and local agencies for disposal if required; and any accidental loss or damage as a result of the chosen disposal method shall be the Contractor's responsibility and shall in no way involve the Owner or Engineer.

C. Continuously clean-up and remove waste materials from the site during the work. Do not allow materials to accumulate on site.

END OF SECTION 31 11 00

(This page intentionally left blank)

PART 1 GENERAL

1.01 WORK INCLUDED

A. The work of this section covers all excavation, backfill, and embankment associated with the construction of the various structures, building, manholes, and any other structures included in this project.

1.02 GENERAL

A. See the Volume 1 and Division 01 00 00, GENERAL REQUIREMENTS, which contain information and requirements that apply to the work specified herein and are mandatory for this project.

1.03 CLASSIFICATION OF EXCAVATED MATERIAL

A. Unclassified Excavation: Materials encountered during the construction of the work regardless of their nature or the manner in which they are removed, will be considered unclassified excavation. Complete all excavation regardless of the type, nature, or condition of the materials encountered. Make own estimate of the kind and extent of the various materials to be excavated in order to accomplish the work.

1.04 DEFINITIONS

A. Relative Compaction: The ratio, in percent, of the as-compacted field dry density to the laboratory maximum dry density as determined by ASTM D698. Corrections for oversize material may be applied to either the as-compacted field dry density or the maximum dry density, as determined by the Engineer.

B. Optimum Moisture Content: Determined by the ASTM standard specified to determine the maximum dry density for relative compaction. Field moisture content shall be determined on the basis of the fraction passing the 3/4-inch sieve.

C. Relative Density: As defined by ASTM D4253 and D4254.

D. Prepared Ground Surface: The ground surface after clearing, grubbing, stripping, excavation, and scarification and/or compaction.

E. Completed Course: A course or layer that is ready for the next layer or next phase of the work.

F. Well-Graded: A mixture of particle sizes that has no specific concentration or lack thereof of one or more sizes. Well-graded does not define any numerical value that must be placed on the coefficient of uniformity,

coefficient of curvature, or other specific grain size distribution parameters. Well-graded is used to define a material type that, when compacted, produces a strong and relatively incompressible soil mass free from detrimental voids.

G. Influence Area: The area within planes sloped downward and outward at an angle of 45 degrees from the horizontal from (a) 1 foot outside the outermost edge at the base of foundations or slabs; or (b) 1 foot outside the outermost edge at the surface of roadways or shoulder; or (c) 0.5 foot outside the exterior edge at the spring line of pipes and culverts.

H. Borrow: Material imported from borrow areas off the immediate project site.

I. Select Backfill Material: Material available onsite that the Engineer determines to be suitable for a specific use.

J. Imported Material: Material obtained by the Contractor from sources off the immediate project site.

K. Structural Fill: Fill material as required under and/or adjacent to structures, paving, sidewalks, driveways, curb, etc.

L. Embankment: The fill material required to raise the existing grade in areas other than under structures.

M. Unsuitable Materials: Unsuitable materials consist of debris, rubble, trash, organics, and other deleterious materials as determined by the Engineer. Unsuitable materials also include previously placed, non-engineered fills that were not placed in maximum 6-inch to 8-inch thick lifts and/or were not compacted to the densities specified herein.

1.05 SUBMITTALS

A. Submittals shall be made in accordance with the General Conditions, Section 01 33 00, SUBMITTALS in Division 01 00 00, GENERAL REQUIREMENTS, and the requirements of this section. Certifications that materials conform to the specification requirements along with copies of the test results from a qualified commercial testing laboratory shall be submitted to the Engineer for approval at least 10 days before the material is delivered to the site for use.

B. The Contractor’s dewatering and shoring or excavation sloping systems for the new structures shall be designed by a Professional Engineer with drawings and calculations submitted with the Professional Engineer’s State of Arizona stamp and signature. The Contractor shall submit plans, drawings, and calculations for the proposed systems. The submittals shall include information on scheduling and sequencing of construction and

protection of new and/or existing structures and utilities. Design calculations shall address the sequence of excavation and placement of lateral support elements. Drawings shall show the locations of all system elements in plan and section. Design calculations should demonstrate the adequacy of the systems and selected components.

C. Review by the Engineer of submittals from the Contractor shall not in any way relieve the Contractor from full responsibility for errors therein or from the entire responsibility for complete and adequate design and performance of dewatering and shoring or excavation sloping systems. The Contractor shall be solely responsible for proper design, installation, operation, and maintenance, and any failure of any component of the provided dewatering and shoring or excavation sloping systems.

D. Submit all materials testing results in accordance with these Specifications and Section 01 40 00, QUALITY CONTROL.

1.06 IMPORTED MATERIAL ACCEPTANCE

A. All imported materials specified in this section are subject to the following requirements:

1. All tests necessary for the Contractor to locate an acceptable source of imported material shall be made by the Contractor. Certification that the material conforms to the Specification requirements along with copies of the test results from a qualified commercial testing laboratory shall be submitted to the Engineer for approval at least 10 days before the material is delivered to the site for use. All material samples shall be furnished by the Contractor at the Contractor's sole expense. Samples shall be representative and be clearly marked to show the source of the material and the intended use on the project. Sampling of the material source shall be done by the Contractor in accordance with ASTM D75. Notify the Engineer at least 24 hours prior to sampling. The Engineer may, at the Engineer's option, observe the sampling procedures. Tentative acceptance of the material source shall be based on an inspection of the source by the Engineer and/or the certified test results submitted by the Contractor to the Engineer, at the Engineer's discretion. No imported materials shall be delivered to the site until the proposed source and materials tests have been tentatively accepted in writing by the Engineer. Final acceptance will be based on tests made on samples of material taken from the completed and compacted course. All testing for final acceptance shall be performed by the Owner.

2. Gradation tests and standard Proctor tests shall be made by the Contractor on representative samples taken at the place of

production prior to shipment to the project site. Representative samples of the finished product for gradation and Proctor testing shall be taken from each 500 tons of prepared materials or more often as determined by the Engineer, if variation in gradation is occurring, or if the material appears to depart from the Specifications. Test results shall be forwarded to the Engineer within 48 hours after sampling.

3. If tests conducted by the Contractor or the Engineer indicate that the material does not meet Specification requirements, material delivery and placement will be terminated until corrective measures are taken. Material which does not conform to the Specification requirements and is placed in the work shall be removed and replaced at the Contractor's sole expense. Sampling and testing performed by the Contractor shall be done at the Contractor's sole expense.

1.07 SHORING, SHEETING, BRACING, AND SLOPING

A. Install and maintain shoring, sheeting, bracing, and sloping necessary to support the side of the excavation, to keep and to prevent any movement which may damage adjacent pavements, utilities, or structures, damage or delay the work, or endanger life and health. Install and maintain shoring, sheeting, bracing, and sloping as required by OSHA and other applicable governmental regulations and agencies.

1.08 EXCAVATION SAFETY

A. The Contractor shall be solely responsible for making all excavations in a safe manner, in accordance with all OSHA and other applicable regulations. Provide appropriate measures to retain excavation side slopes and prevent rock falls to ensure that persons working in or near the excavation are protected. Any necessary trench excavation permits shall be the responsibility of the Contractor.

1.09 CODES, ORDINANCES, AND STATUTES

A. Contractors shall familiarize themselves with, and comply with, all applicable codes, ordinances statutes, and bear sole responsibility for the penalties imposed for non-compliance.

1.10 TOLERANCES

A. All material limits shall be constructed within a tolerance of 0.1 foot except where dimensions or grades are shown or specified as minimum. All

grading shall be performed to maintain slopes and drainage as shown. No reverse slopes will be permitted.

1.11 QUALITY ASSURANCE

A. The Contractor shall perform earthwork operations in compliance with these specifications and within the applicable requirements of governing authorities having jurisdiction.

B. Over-excavation made by the Contractor in earth or rock beyond the specified line and grade shall be corrected, at the expense of the Contractor. In areas not under slabs or footings, this shall be done by filling with structural fill meeting the requirements in this section and compacted to 98 percent of maximum density at optimum moisture as determined by ASTM D698. Over-excavation in areas below slabs or footings shall be corrected as specified in this section under Part 3, EXECUTION. Any other costs incurred by the Owner, or the Engineer as a result of the over-excavation, such as professional engineering or construction inspection services or additional materials, shall be the responsibility of the Contractor. If the over-excavation is directed by the Engineer, the excavation will be paid at a price negotiated with the Contractor through a change order to the lines and grades specified by the Engineer.

C. Under-compacted soil placed by the Contractor shall, at the expense of the Contractor, be corrected by additional compaction effort or excavation, replacement, and compaction. Any costs incurred by the Owner or the Engineer as a result of the under-compaction, such as additional professional engineering services, materials testing, or construction inspection services, shall be the responsibility of the Contractor.

D. Materials testing shall be the Contractor’s responsibility. Field density testing shall be the responsibility of the Owner’s testing representative.

E. BRACING AND SHORING: Safe temporary cut slopes are the responsibility of the Contractor who shall meet all appropriate OSHA regulations including but not limited to; "Constructions Standards for Excavations" (29 CFR Part 1926.650-.652) Subpart P, effective on the date of the bid opening.

PART 2 PRODUCTS

2.01 EQUIPMENT

A. The Contractor may use any type of earthmoving and compacting equipment they may choose; except only walk behind hand compaction equipment will be utilized within 4 feet of structure walls, provided the

equipment is in satisfactory condition and of such capacity as to fulfill the requirements of this section.

B. No embankment or backfill shall be started or continued without adequate compaction equipment on hand. If watering is required, hoses from an adequate source, pumps, or tank wagons or trucks with a distributor capable of adequately spreading the water evenly across the width of the equipment shall be used.

2.02 MATERIAL

A. Earthfill: Excavated native earth material may be used for backfill if it is placed more than 10 feet from any structure walls and it is free of detrimental quantities of organic material, such as vegetation, roots, or peat. Rocks larger than 3-inches in average dimension and native clay materials shall not be used in backfill. In order to be used as backfill, native earth material shall be well graded from coarse to fine. Moisture conditioning of native materials may be required to achieve specified compaction. Provide imported material of equivalent quality, if required to accomplish the work.

B. Imported Engineered Gravel Backfill: Where detailed on the Drawings or where specified, imported engineered gravel backfill shall be provided that is reasonably clean (less than 10 percent passing the 200 sieve) naturally occurring or produced aggregate, crushed rock, or gravel graded from 1 ½ -inch maximum with not less than 30 percent and not more than 60 percent passing the No. 4 sieve. Sand fill will not be permitted. Fill shall be free from clay balls and organic material and shall be well graded from coarse to fine, containing sufficient fine material for proper compaction. Where shown on the Drawings, provide 3/4-inch minus gravel backfill.

C. Imported Engineered Structural Fill: Where detailed on the Drawings or where specified, imported engineered structural fill shall be provided that is reasonably clean (less than 20 percent passing a No. 200 sieve) naturally occurring or produced aggregate, crushed rock, or gravel graded from 1 ½ -inch maximum with not less than 25 percent and not more than 65 percent passing the No. 4 sieve. Sand fill will not be permitted. Fill shall be free from clay balls and organic material and shall be well graded from coarse to fine, containing sufficient fine material for proper compaction.

D. Lean Clay: Lean clay materials may be approved native or imported material. Lean clay must be classified as a low plasticity clay with a plasticity index of not less than 10 and a liquid limit less than 50.

E. Imported Drain Gravel: Where detailed on the Drawings, imported drain gravel shall be washed river-run gravel or washed crushed rock, hard and durable with a percentage of wear less than 35 percent when tested for

resistance to abrasion in conformance with ASTM C535, free of roots and organic material, and conforming to the following gradation requirements:

Sieve or Screen Size	Percent Passing By Dry Weight
2-inch	100
1 ½-inch	95-100
3/4-inch	35-70
3/8-inch	10-30
No. 4	0-5
No. 200	0 - 2

F. Aggregate Base Course and Aggregate Surface Courses: Where detailed on the Drawings or where specified, aggregate base course (ABC) and aggregate surface courses (ASC) shall conform to the following:

1. Crushed Aggregate Base Course (ABC) shall be placed in accordance with Section 310 of the MAG Specifications and shall conform to the requirements of Section 702.2 and the Aggregate Base gradation in Table 702-1 except that the percentage of material passing the No. 200 Sieve shall be 0-10% and shall be non-plastic when tested in accordance with AASHTO T-146, T-89 and T-90.

2. Crushed Aggregate (gravel) Surface Course (ASC) shall be placed in accordance with Section 310 of the MAG Specifications and shall conform to the requirements of Section 702.2 and the Aggregate Base gradation in Table 702-1except that the percentage of material passing the No. 200 Sieve shall be 4-15% and the plasticity index shall be 4-12 when tested in accordance with AASHTO T-146, T-89 and T-90.

G. Controlled Low Strength Material (CLSM): CLSM material used for trench backfill shall be a 1-SACK mix conforming to the requirements of Section 728 of the MAG Specifications and shall be placed in accordance with Section 604 of the MAG Specifications.

H. Topsoil: Native topsoil, excavated on-site, shall be reused. Native topsoil shall be graded and screened; free of roots, rocks larger than ½-inch, subsoil, debris, large weeds, and other foreign matter. If insufficient native topsoil is available, provide imported borrow topsoil meeting the same requirements.

I. Geotextile or Filter Fabric: Geotextile (or filter) fabric shall be woven or nonwoven geotextile material as specified in Section 31 34 19, GEOTEXTILES.

J. Native Gravel Backfill: Excavated sand and gravel free from roots, organic matter, trash, debris and other deleterious material may be used as backfill, as approved by the Engineer. Material shall be well graded from coarse to fine. On-site clay materials may not be used. Maximum size aggregate shall be 3 inches and not more than 10 percent shall pass the No. 200 sieve. Provide imported gravel material, if required to accomplish the work.

K. Borrow or Waste Material: The intent of the project for earthwork is to grade the headworks site as shown on the Drawings using native soils. However, imported structural fill is required below all structures and around all structures to within a minimum of 3 feet from the structure wall or footings. This may result in excess material. Excess material may be graded smooth in areas outside the project site, but within the Owner's property as specified.

2.03 WATER FOR COMPACTION

A. Furnish as required and/or Contractor may coordinate with Owner to utilize on-site treated effluent from the Plant's utility water system. Volume, flow and availability are subject to Owner's operation and so Contractor to coordinate with Owner.

2.04 COMPACTION EQUIPMENT

A. Compaction equipment shall be of suitable type and adequate to obtain the densities specified, and shall provide satisfactory breakdown of materials to form a dense fill.

B. Compaction equipment shall be operated in strict accordance with the manufacturer's instructions and recommendations. Equipment shall be maintained in such condition that it will deliver the manufacturer's rated compactive effort. If inadequate densities are obtained, larger and/or different types of additional equipment or other methods shall be provided by the Contractor. Hand-operated equipment shall be capable of achieving the specified densities.

2.05 MOISTURE CONTROL EQUIPMENT

A. Equipment for applying water shall be of a type and quality adequate for the work, shall not leak, and shall be equipped with a distributor bar or other approved device to assure uniform application. Equipment for mixing and drying out material shall consist of blades, discs, or other approved equipment.

PART 3 EXECUTION

3.01 CLEARING AND GRUBBING

A. Clearing and grubbing shall be done in accordance with Section 31 11 00, CLEARING AND GRUBBING prior to beginning work in this section. Topsoil shall be stripped and stockpiled by this Contractor. This stockpiled topsoil shall be used on this project as specified in Section 32 40 00, SURFACE RESTORATION.

3.02 EXCAVATION

A. General: Dewater the ground as hereinafter specified, if necessary, prior to starting excavation. Protect structures, sidewalks and driveways, pavement, fences, benchmarks, survey control points, and other existing features designated to remain and not be disturbed. Excavation is unclassified. Excavation shall be performed to the lines, grades and elevations shown on the Drawings or as required to accomplish the construction. The Engineer reserves the right to make minor adjustments or revisions in lines or grades. Perform all excavation regardless of the type, nature, or condition of the material encountered. The method of excavation used is optional; however, no equipment shall be operated within 5 feet of existing structures or newly completed construction without approval of the Engineer. The Contractor shall protect all existing and newly constructed structures in all cases, and is solely responsible for any damage to those structures during their work. Excavation that cannot be accomplished without endangering present or new structures shall be done with hand tools. The Contractor is responsible for field staking the earthwork. No excavation shall be started until the staking or grade control is complete. Should the Contractor excavate below the designated lines through fault or negligence, the Contractor shall replace such unauthorized over-excavation with approved materials in an approved manner at their own expense.

B. Classification: All excavation shall be considered unclassified. All material encountered of whatever nature shall be removed and used in embankment or disposed of as specified in this section. The presence of rock or frozen material shall not constitute a claim by the Contractor for extra work.

C. Limits of Excavation: Excavation shall extend a sufficient distance from walls and footings to allow for placing, removal, and inspection of forms, and to allow for placing of structural fill. Temporary construction excavation side slopes shall be made as steep as safely possible in the upper 15 feet below existing grade. All native sub-grade areas below structures, sidewalks, pavement, or to other similar improvements shall be scarified to a minimum depth of 12 inches, moisture conditioned, and compacted to not less than 98 percent of maximum dry density at 2 percentage points wet of optimum moisture content in accordance with ASTM D698. Undercutting will not be permitted. Where suitable bearing is not encountered at the specified elevation, the Engineer may direct that additional depth be

excavated as required. Such over-excavation shall be compensated for on a supplemental agreement or work order basis, if not specifically provided for in the Bid Form. Unauthorized over-excavation by the Contractor shall be corrected by the Contractor using approved materials as specified hereinbefore at no cost to the Owner. Over-excavation below slabs shall be replaced with select imported engineered structural fill materials, thoroughly compacted to not less than 98 percent of maximum density, (ASTM D 698), to the subgrade elevation. Additional depth of over-excavation below structural concrete footings shall be poured with concrete as a part of the footing, at no additional cost to the Owner.

D. Protection of Excavation: All necessary bailing, drainage, sheeting, and construction of cribs and cofferdams shall be included as part of the excavation. Excavations over four feet in depth shall be shored, sheeted and braced as may be necessary for the protection of the work and the safety of the personnel, or sloped to the angle of repose of the material when saturated per OSHA standards. When excavation is at the required depth, any water, if present, shall be pumped out for cleaning and foundation bed inspection.

E. Dewatering of Excavation:

1. Provide and operate equipment adequate to keep all excavations and trenches free of water, and meet other specified performance requirements. Remove all water a minimum of 3 feet below the lowest point of excavation during periods when concrete is being deposited, when pipe is being laid, during the placing of backfill, and at such other times as required for efficient and safe execution of the work on a dry and stable subgrade. Avoid settlement or damage to adjacent property. Dispose of water in an approved manner that will not damage adjacent property. When dewatering open excavations, dewater from outside the structural limits and from a point below the bottom of the excavation when possible. Design dewatering system to prevent removal of fines from existing ground.

2. Adjacent areas shall be graded so that surface drainage is away from excavations. Any water accumulating within the excavation shall be promptly removed. Pumping from the interior of any enclosed foundation shall be done so the possibility of any portion of the concrete materials being carried away is eliminated. No pumping will be allowed during the placing of concrete and for 24 hours thereafter, unless it is done from a suitable sump separated from the concrete work by a water tight wall.

3. Positive dewatering systems shall be furnished and installed as necessary to maintain all excavations and trenches free of water at

all times until the structure or facility is completely constructed, so that full dead load is applied, and backfill is in place. If necessary, such systems shall remove ground water from outside the limits of the excavation, and shall maintain the water level sufficiently far below the base of the excavations to prevent buoyancy conditions or softening of the base. The Contractor shall dewater the work area sufficiently to prevent water from seeping through the excavated side slopes. Provisions shall be made for removal of storm runoff and all other water that may enter the excavations. Open-sump pumping from the interior of excavations will be permitted only to dispose of surface runoff, and shall not be used as the primary means of dewatering.

F. Structure Shoring:

1. Where necessary due to site limitations and to maintain steep side slopes, the Contractor shall shore the excavation for various structures. It shall be the Contractor's responsibility to provide and maintain a reasonable and safe excavation for all phases of construction. In no case shall any excavation be made in such a manner so as to endanger or damage adjacent facilities or property adjacent to the site.

2. The Contractor shall design, install, and maintain all shoring. The type of shoring shall be the Contractor's option. The shoring shall be designed and maintained to prevent any movement of soil which may cause damage to the adjacent facilities and property, damage or delay the work, or endanger life and health.

3. Shoring shall be designed and constructed to withstand soil and hydrostatic loadings, and appropriate equipment and surcharge loadings. Tie-backs and bracing shall be installed where required to prevent movement. Design of shoring shall incorporate the Contractor's sequence of excavation and placement of lateral support elements. The Contractor shall repair, at his own expense, all damage resulting from failure to provide adequate support.

4. Shoring shall be removed in a manner which avoids damage to new or existing facilities or adjacent property. All voids left by removal of shoring shall be immediately filled.

G. Approval of Excavation by Engineer: Prior to the placement of concrete for footings, walls, or slabs, the completed excavation shall be inspected and approved by the Engineer or his geotechnical sub-consultant. No footing or slab shall be placed until after the Engineer, Owner or his geotechnical sub-consultant has approved the depth of the excavation and the character of

the foundation material. Provide a minimum 12-inch thick (or as otherwise required in Geotechnical Report) layer of imported engineered structural fill below all footings and slabs at bottom of excavations.

H. Blasting: Blasting for excavations will not be permitted.

I. Overbreak: Overbreak, including slides, is defined as that portion of any material displaced or loosened beyond the finished work as designed by the Engineer. The Contractor shall remove such overbreak and shall replace such overbreak with approved material in an approved manner. The additional work will be accomplished at no additional expense to the Owner.

J. Stockpiling: If during the excavation it is not possible to place suitable excavated material directly in an embankment, the material may be stockpiled in approved areas for later use.

3.03 BACKFILLING AT STRUCTURES

A. General: Backfilling shall be performed where indicated or required, to the grades and elevations shown on the Drawings. No backfilling shall be commenced without approval of the Engineer. Do not backfill over porous, wet, frozen, or spongy subgrade surfaces, and do not backfill with frozen materials. Prior to backfilling, all concrete forms shall be removed and the excavation cleaned of all trash and debris. Any paint, insulation, waterproofing or coating which has been applied to below grade surfaces shall be completely dried or cured. Backfill around concrete structures only after the concrete has reached the specified compressive strength indicated in Section 03 30 00, CONCRETE. Backfill water-holding structures only after satisfactory leakage tests have been conducted as specified in Section 03 30 00, CONCRETE. All material used for backfill shall be as specified and of a quality acceptable to the Engineer and shall be free of large and frozen lumps, wood, and other extraneous materials. Do not operate large earth-moving or compaction equipment within 5 feet of concrete structures.

B. Compaction: Backfill material shall be placed in continuous horizontal layers not to exceed 8 inches in loose lift thickness when heavy, self-propelled compaction equipment is used, and 4 to 6 inches in loose lift thickness if hand-operated equipment (jumping jack, plate compactor) is used. Each layer shall be compacted as specified hereinafter. Compact all materials by mechanical means; flooding or jetting will not be permitted. If compaction tests indicate that compaction or moisture content is not as specified, material placement shall be terminated and correction action(s) shall be taken by the Contractor prior to continued placement. Where backfill is placed on both sides of a wall or column, both sides shall be backfilled in such a manner so that the difference in compacted grade does not exceed 18 inches at any time. Care shall be taken when compacting

around structure footings, slabs, and walls to prevent damage to the structure.

C. Watering: Water may be added only to bring the backfill material to the specified moisture content range (plus or minus 2 percent from optimum) for compaction. Jetting or ponding of the backfill material will not be permitted.

D. Imported Engineered Gravel Backfill: Where called for in the Geotechnical Report, imported gravel backfill shall be provided with a minimum depth as shown on the Drawings. Do not exceed loose lifts of 6 inches. Compact each lift to not less than 98 percent of maximum ASTM D698 dry density at optimum moisture content, plus or minus 2 percentage points. Moisten material as required to aid compaction. Place material in horizontal lifts and in a manner which avoids segregation. Gravel fill shall be compacted with compactors, suitable for such material, to the satisfaction of the Engineer. Sand fills will not be permitted.

E. Imported Engineered Structural Fill Below Structures: Where called in the Geotechnical Report, below all slabs and footings, or as otherwise specified herein or directed by the Engineer, provide hereinbefore specified imported structural fill for foundation preparation at a minimum compacted depth of 8 inches. Place fill material in maximum 6-inch thick loose lifts and compact each lift to not less than 98 percent of maximum ASTM D698 dry density at optimum moisture content, plus or minus 2 percentage points.

F. Earth Backfill Around Structures: Place hereinbefore specified Earthfill to the specified grade in all areas not designated to be structural fill or gravel fill. Deposit material in horizontal lifts of maximum 8-inch un-compacted loose depth and compact each lift to not less than 95 percent of maximum ASTM D698 dry density. Maintain material at optimum moisture content, plus or minus 2 percentage points. Make allowance for topsoil where required.

G. Where shown on the Drawings, place hereinbefore specified gravel drain material to the thickness and limits shown on the Drawings. Tamp gravel to a stable condition around sub-drain pipes. Remainder of gravel layer above and below pipes shall be compacted in at least two lifts to achieve a minimum relative density of 70 percent per ASTM 4253-00 and D4254-00.

H. Any subsequent damage to slabs, piping, concrete structures, facilities, or other structures caused by settlement of fill material shall be corrected and repaired by the Contractor at the Contractor's sole expense.

3.04 MOISTURE CONTROL

A. During all compacting operations, maintain optimum practicable moisture content for each lift of fill. Maintain moisture content uniform throughout each lift. Insofar as practicable, add water to the material at the site of excavation. Supplement, if required, by sprinkling water and mixing the fill material. At the time of compaction, the water content of the material shall be at optimum moisture content, plus or minus 2 percentage points.

B. Do not attempt to compact fill material that contains excessive moisture. Aerate material by blading, discing, harrowing, or other methods, to hasten the drying process.

3.05 FIELD DENSITY AND MOISTURE TESTS

A. The Contractor's testing representative will determine in-place density and moisture content by any one or combination of the following methods: ASTM D2922, D1556, D2216, D3017, or other methods selected by the Engineer. Backfill test areas at Contractor's sole expense.

B. The frequency and location of testing shall be determined by the Engineer and Owner and as defined in Section 01 40 00, QUALITY CONTROL.

C. The Engineer may require the Contractor to test any lift of fill at any time, location, or elevation. No areas will be accepted that have compacted densities less than specified hereinbefore.

3.06 WEATHER CONDITIONS

A. Earthwork operation shall be suspended at any time when satisfactory results cannot be obtained on account of rain, freezing weather, or other unsatisfactory field conditions.

3.07 DRAINAGE

A. During earthwork operations the grade shall be maintained in such a condition that it will be well drained at all times.

B. If necessary, temporary drains or diversion ditches shall be installed in order to intercept or divert surface water which could affect the work.

3.08 SITE GRADING

A. Perform all earthwork to the lines and grades as shown on the Drawings and/or established by the Engineer, with proper allowance for ground or landscaping cover where specified or shown. Shape, trim, and finish slopes of channels to conform with the lines, grades, and cross sections shown. Make slopes free of all exposed roots and stones exceeding 3-inch diameter which are loose and liable to fall. Round tops of banks to circular curves, in

general, not less than a 6-foot radius. Rounded surfaces shall be neatly and smoothly trimmed. Neatly blend all new grading into surrounding, existing terrain. Over-excavating and backfilling to the proper grade will not be acceptable. Finished site grading will be reviewed by the Engineer.

3.09 PLACING TOPSOIL

A. After rough grading is completed and approved by the Engineer, spread topsoil hereinbefore specified over all cuts, slopes, fills, embankments, and all previously vegetated areas damaged by construction in the project site area to a minimum rolled depth of 6 inches to the surface elevations as shown on the Drawings or as established by the Engineer. Loosen the finished surface to a depth of 2 inches and leave in smooth condition, free from depressions or humps.

3.10 CLEANUP

A. All unsuitable material, waste sheeting or forming, and debris shall be removed from the site and disposed of by the Contractor in approved areas as directed by local regulatory agencies or the Owner. The area shall be graded to required elevations and all rocks and boulders bladed into a furrow and removed for disposal by the Contractor. Remaining topsoil stripped during clearing and stockpiled shall be spread in such a manner as to restore the area surface to its original condition**,** as approved by the Owner.

B. All excess native soil materials not required for backfilling around new structures may be disposed of on-site by the Contractor in an area identified by the Owner. Materials shall be clean without any debris or contaminants. Actual area for disposal must be coordinated with the Owner. Disposal area must be shaped and graded as directed by the Owner and Engineer to leave the site with a neat appearance.

C. Also see Volume 1 and Section 32 40 00, SURFACE RESTORATION for other cleanup requirements.

END OF SECTION 31 23 00

(This page intentionally left blank)

APPENDIX

31 23 00

EARTHWORK FOR STRUCTURES

GEOTECHNICAL INFORMATION

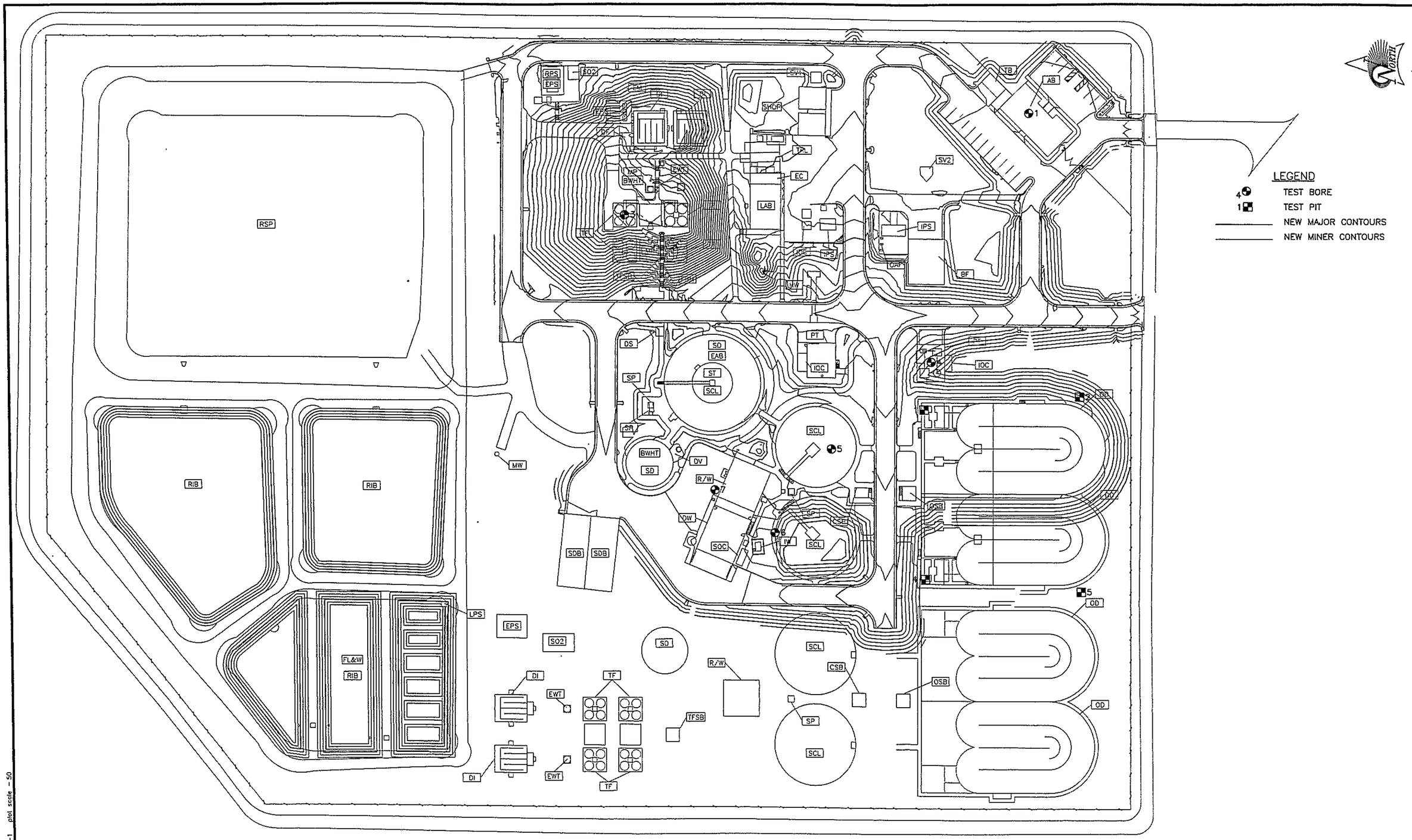

REVISIONS		
NO.	DATE	BY
1	3-17-98	EKC
2		
3		
4		
5		
6		
7		

SUNRISE ENGINEERING, INC.
CONSULTING ENGINEERS & LAND SURVEYORS
3660 E. UNIVERSITY DR., SUITE 2
MESA, ARIZONA 85205 (602) 832-4420

SUNRISE ENGINEERING INC.

CITY OF BULLHEAD CITY
SECTION 10
WASTEWATER TREATMENT PLANT EXPANSION - 1998
GEOTECHNICAL BORING SITE PLAN

PROJECT NO.	
E6258	
DESIGNED	CHECKED	DRAWN
FDK,JNS	ACR	EKC
DATE	DRAWING NO.
1-06-98	C:SL.1
SCALE	SHEET NO.
1" = 50'	13 of 259

filename = C-SL-1 plot scale = 50

LEGEND OF GRAPHIC LOGS

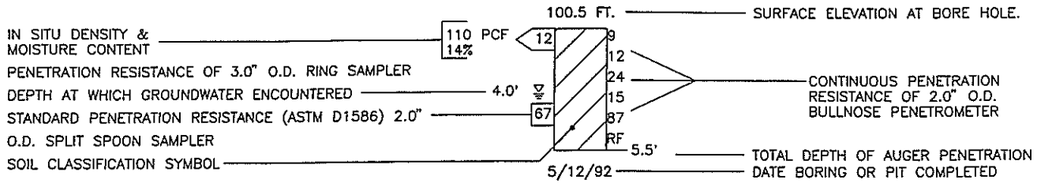

IN FIELD SOIL CLASSIFICATION SYSTEM

SYMBOL	LEGEND	DESCRIPTION	MAJOR DIVISIONS
	GW	WELL–GRADED GRAVELS OR GRAVEL–SAND MIXTURES. LESS THAN 5%–#200 FINES	GRAVELS MORE THAN HALF OF COARSE FRACTION IS LARGER THAN NO. 4 SIEVE SIZE
	GP	POORLY–GRADED GRAVELS OR GRAVEL–SAND MIXTURES. LESS THAN 5%–#200 FINES	
	GM	SLIGHTLY GRAVEL, GRAVEL–SANDSILT MIXTURES. LESS THAN 12%–#200	
	GC	CLAYEY GRAVELS, GRAVEL –SAND–CLAY MIXTURES MORE THAN 12%–#200 FINES	
	SW	WELL–GRADED SANDS OR GRAVELY SAND, LESS THAN 5%–#200	SANDS MORE THAN HALF OF COARSE FRACTION IS SMALLER THAN NO. 4 SIEVE SIZE
	SP	POORLY–GRADED SANDS OR GRAVELY SANDS, LESS THAN 5%–#200 FINES	
	SM	SILTY SANDS, SAND–SILT MIXTURES, MORE THAN 12%–200 FINES	
	SC	CLAYEY–SANDS, SAND–CLAY MIXTURES, MORE THAN 12%–200 FINES	
	ML	INORGANIC SILT ROCK FLOUR AND FINE SANDY OR CLAYEY SILTS OF LOW TO MEDIUM PLASTICITY	SILTS ANS CLAYS LIQUID LIMITS LESS THAN 50
	CL	INORGANIC CLAYS, GRAVELY CLAYS, SANDY CLAYS, SILTY CLAYS AND LEAN CLAYS OF LOW TO MEDIUM PLASTICITY	
	OL	ORGANIC SILTS AND ORGANIC SILT–CLAY MIXTURES OF LOW TO MEDIUM PLASTICITY	
	MH	INORGANIC SILTS, MICACEOUS OR DIATOMACEOUS, AND FINE SANDY OR CLAYEY SILTS OF HIGH PLASTICITY	SILTS ANS CLAYS LIQUID LIMITS GREATER THAN 50
	CH	INORGANIC CLAY, FAT CLAYS, AND SILTY CLAYS OF HIGH PLASTICITY	
	OH	ORGANIC CLAYS, AND ORGANIC SILTS OF MEDIUM TO HIGH PLASTICITY	
	PT	PEAT AND OTHER HIGHLY ORGANIC SOILS	

GRAIN SIZE							
U.S. STANDARD SERIES SIEVE	200	40	10	4	3/4"	3"	12"
CLEAR SQUARE SIEVE OPENINGS							
SILTS & CLAYS DISTINGUISHED ON BASIC PLASTICITY	SAND			GRAVEL		COBBLES	BOULDERS
	FINE	MEDIUM	COARSE	FINE	COARSE		

MOISTURE CONDITION (INCREASING MOISTURE)
(PLASTIC LIMITS) (LIQUID LIMITS)
DRY — SLIGHTLY DAMP — DAMP — MOIST — VERY MOIST — WET (SATURATED)

CONSISTENCY CORRELATION		CONSISTENCY CORRELATION	
CLAYS & SILTS	BLOWS/FOOT*	SANDS & GRAVELS	BLOWS/FOOT*
VERY SOFT	0–2	VERY LOOSE	0–4
SOFT	2–4	LOOSE	4–10
FIRM	4–8	MEDIUM DENSE	10–30
STIFF	8–16	DENSE	30–50
VERY STIFF	16–32	VERY DENSE	OVER 50
HARD	OVER 32		

NUMBER OF BLOWS OF 140 LB. HAMMER FALLING 30" TO DRIVE A 2" O.D. (1–3/8" ID.) SPLIT SPOON SAMPLER (ASTM D1586).

GRAPHICAL TEST PIT LOGS

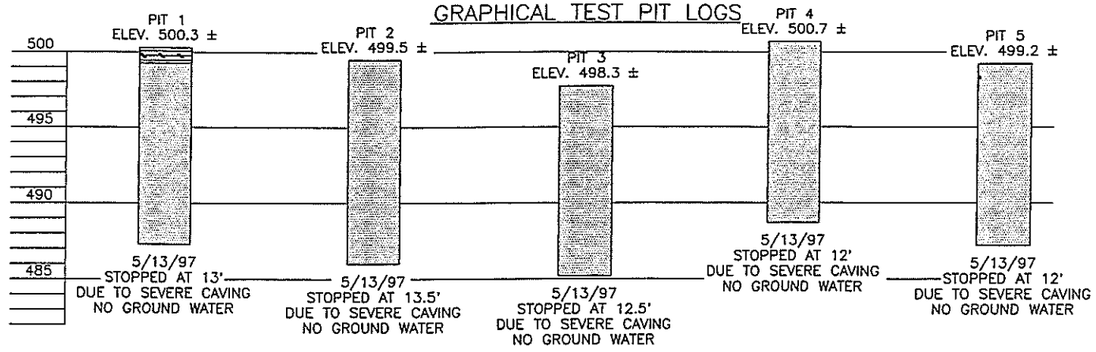

LEGEND OF SOIL TYPES

CLAYEY SAND (FILL): BROWN; PREDOMINANTLY SAND WITH SOME MEDIUM PLASTICITY CLAY; OCCASIONAL RE–BAR AND OTHER CONSTRUCTION RUBBLE; SOME GRAVELS.

SILTY SAND–SAND (SM–SP): BROWN TO TAN; PREDOMINANTLY VERY FINE TO FINE SANDS; TRACE TO SOME LOW TO NON–PLASTIC FINES; SLIGHTLY DAMP; MEDIUM DENSE.

NOTES:
1– NO FREE GROUND WATER WAS ENCOUNTERED IN ANY OF THE TEST PITS DURING EXCAVATION.
2– ALL TEST PITS EXCAVATED WITH BACK HOE UNLESS OTHERWISE NOTED

GRAPHICAL BORING LOGS

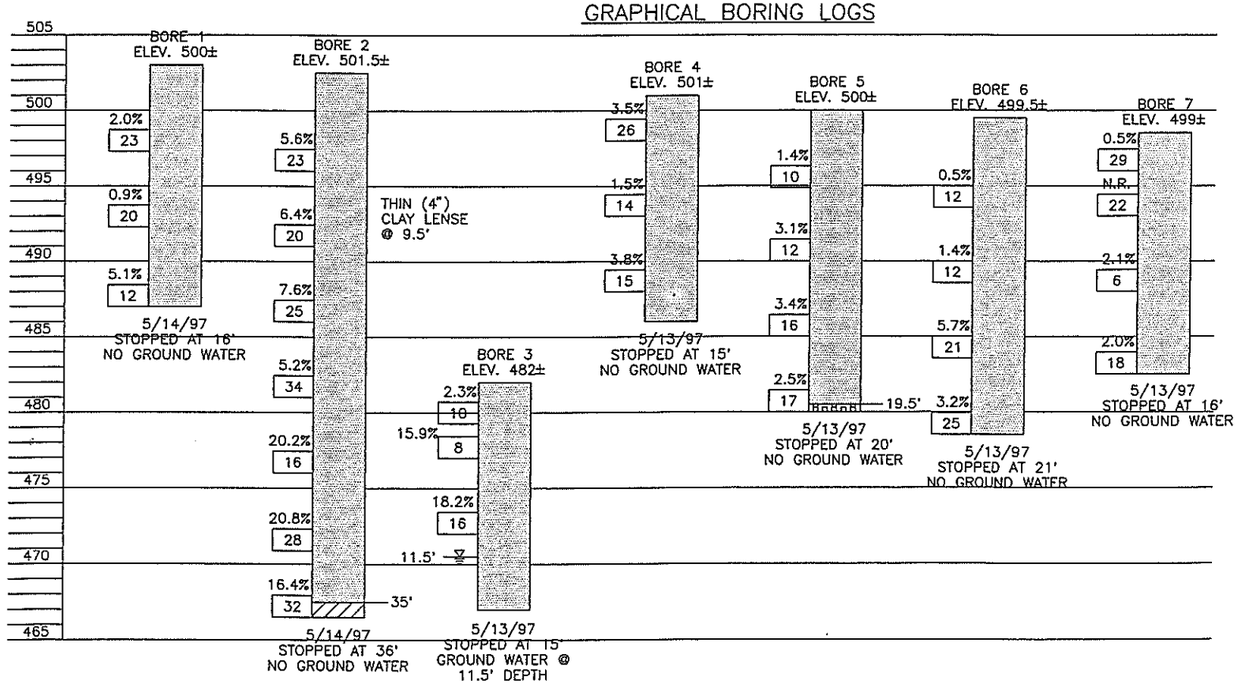

LEGEND OF SOIL TYPES

SILTY SAND–SAND (SM–SP): BROWN TO TAN; PREDOMINANTLY VERY FINE TO FINE SANDS; TRACE TO SOME LOW TO NON–PLASTIC FINES; SLIGHTLY DAMP; MEDIUM DENSE.

SAND (SP): BROWN TO TAN; PREDOMINANTLY MEDIUM TO COARSE SANDS; SLIGHTLY DAMP; MEDIUM DENSE.

CLAY (CL): BROWN; MEDIUM PLASTICITY CLAY;MOISTURE CONTENT WELL ABOVE PLASTIC LIMITS; STIFF.

NOTES:
1– NO FREE GROUNDWATER WAS ENCOUNTERED IN ANY OF THE BORING DURING DRILLING UNLESS NOTED OTHERWISE.
2– ALL BORINGS WITH 7" DIAMETER HOLLOW STEM AUGER UNLESS OTHERWISE NOTED.

filename –C–SL–2 plot scale – 1–1

REVISIONS		
NO.	DATE	BY
1		
2		
3		
4		
5		
6		
7		

SUNRISE ENGINEERING, INC.
CONSULTING ENGINEERS & LAND SURVEYORS
3660 E. UNIVERSITY DR., SUITE 2
MESA, ARIZONA 85205 (602) 832–4420

SUNRISE ENGINEERING INC.

Registered Professional Engineer — 19552 — ALDEN C. ROBINSON — 6–98 — Date Signed — ARIZONA, U.S.A.

Registered Professional Engineer — 31984 — BRENT C. (MUSK) GROTHEER — Date Signed — ARIZONA, U.S.A.

CITY OF BULLHEAD CITY
SECTION 10
WASTEWATER TREATMENT PLANT EXPANSION – 1998

GEOTECHNICAL BORING PLAN & LOGS

PROJECT NO. E6258		
DESIGNED FDK,JNS	CHECKED ACR	DRAWN DLM
DATE 1–06–98	DRAWING NO. C:SL.2	
SCALE NO SCALE	SHEET NO. 14 of 259	

Project Name: Section 10 WWTP
Project Location: Bullhead City, Arizona
Sample: Pit 2 @ 0–10'

CGC Project No: 402.01
Date: 17–Dec–97

GRADATION & ATTERBERG LIMITS

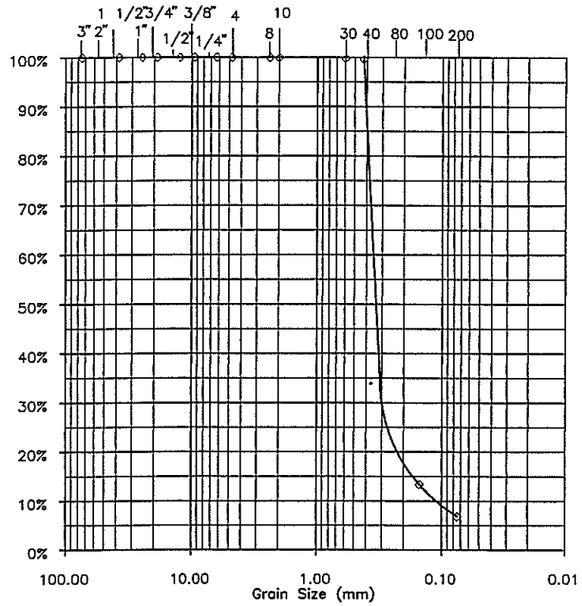

Liquid Limit	Plastic Limit	Plasticity Index	Unified Soil Classification
		Non–Plastic	Silty Sand (SP–SM)

PROJECT NAME: Section 10 WWTP
SAMPLE: Source: Pit 2 @ 0–10'
Material: Native sand
Sampled By: Copeland
TESTED: ASTM: D698 Method:

CGC Project No: 402.01
17–Dec–97

	Method A Proctor Value	Rock Corrected Proctor
Maximum Density (pcf)=	103.0	103.0
Optimum Moisture (%)=	14.0	14.0

Percent Rock above No. 4 sieve (%) = 0.0

ASTM D698 – Moisture Density Test

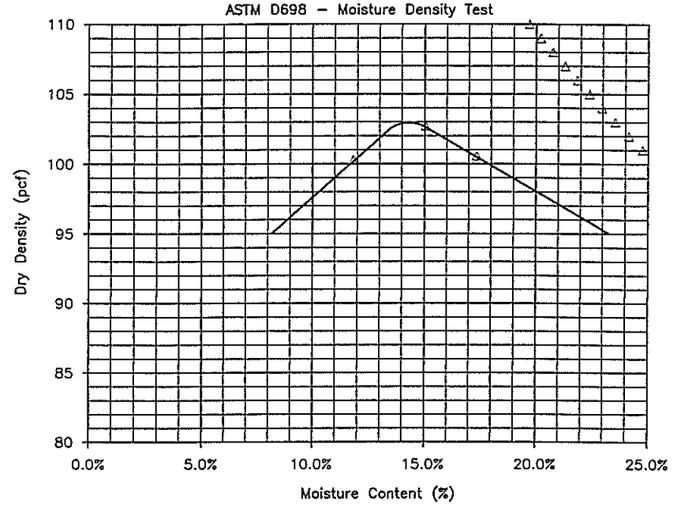

Project Name: Section 10 WWTP
Project Location: Bullhead City, Arizona
Sample: Boring 7 @ 0–5'

CGC Project No: 402.01
Date: 17–Dec–97

GRADATION & ATTERBERG LIMITS

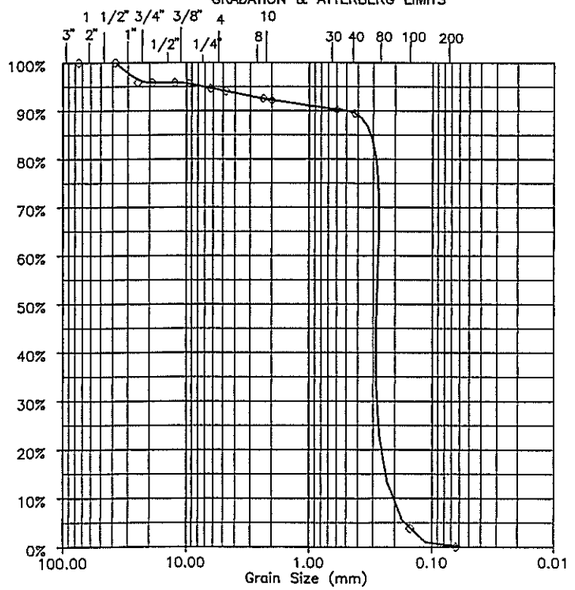

Liquid Limit	Plastic Limit	Plasticity Index	Unified Soil Classification
		Non–Plastic	Silty Sand (SP)

Project Name: Section 10 WWTP
Project Location: Bullhead City, Arizona
Sample: Boring 8 @ 0–5'

CGC Project No: 402.01
Date: 17–Dec–97

GRADATION & ATTERBERG LIMITS

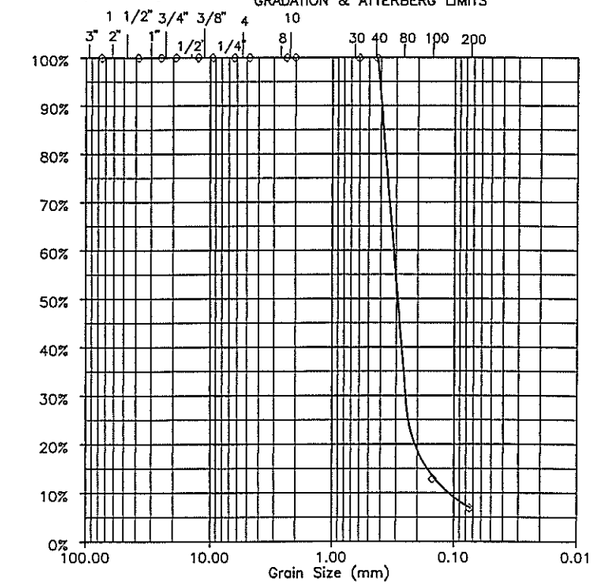

Liquid Limit	Plastic Limit	Plasticity Index	Unified Soil Classification
		Non–Plastic	Silty Sand (SP–SM)

filename = C-SL-3 plot scale = 1-1

REVISIONS		
NO.	DATE	BY
1		
2		
3		
4		
5		
6		
7		

SUNRISE ENGINEERING, INC.
CONSULTING ENGINEERS & LAND SURVEYORS
3660 E. UNIVERSITY DR., SUITE 2
MESA, ARIZONA 85205 (602) 832-4420

SUNRISE ENGINEERING INC.

ALDO C. ROBINSON 19400 REGISTERED PROFESSIONAL ENGINEER ARIZONA, U.S.A.

BRENT L. (MUSH) CROWTHER REGISTERED PROFESSIONAL ENGINEER ARIZONA, U.S.A.

CITY OF BULLHEAD CITY
SECTION 10
WASTEWATER TREATMENT PLANT EXPANSION – 1998
GEOTECHNICAL TESTING

PROJECT NO.		
E6258		
DESIGNED	CHECKED	DRAWN
FDK, JNS	ACR	DLM
DATE	DRAWING NO.	
1–06–98	C:SL.3	
SCALE	SHEET NO.	
NO SCALE	15 of 259	

Project Name: Section 10 WWTP
Project Location: Bullhead City, Arizona
Sample: Boring 4 @ 0–5'

CGC Project No: 402.01
Date: 17–Dec–97

GRADATION & ATTERBERG LIMITS

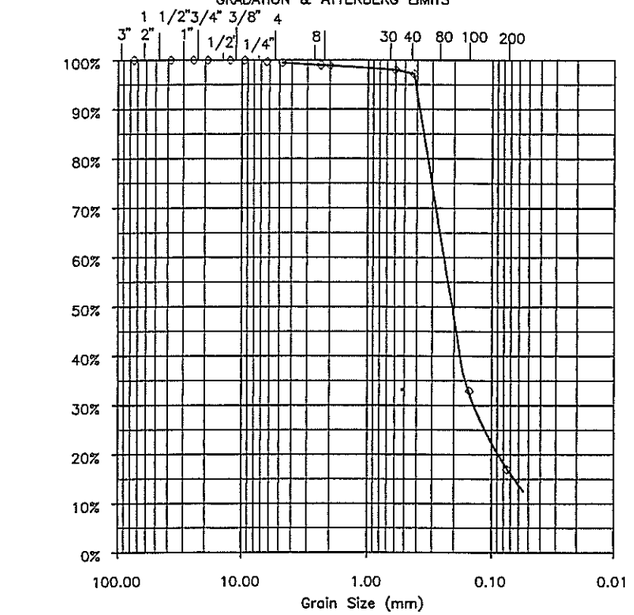

Liquid Limit	Plastic Limit	Plasticity Index	Unified Soil Classification
		Non–Plastic	Silty Sand (SP–SM)

Project Name: Section 10 WWTP
Project Location: Bullhead City, Arizona
Sample: Boring 9 @ 0–5'

CGC Project No: 402.01
Date: 17–Dec–97

GRADATION & ATTERBERG LIMITS

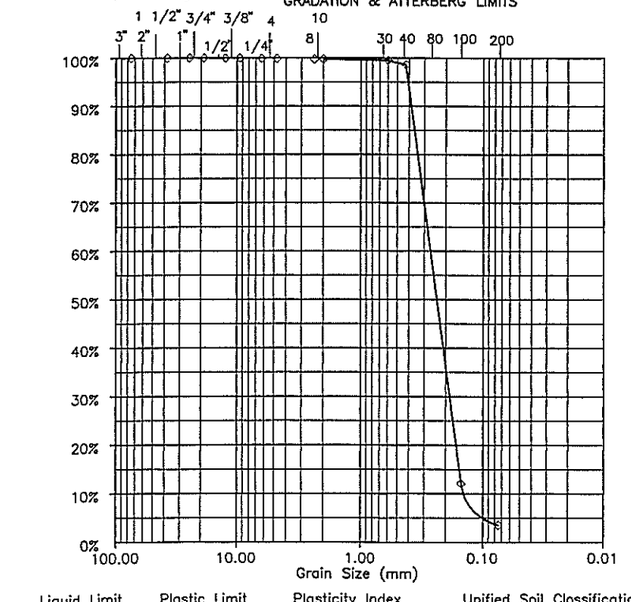

Liquid Limit	Plastic Limit	Plasticity Index	Unified Soil Classification
		Non–Plastic	Silty Sand (SP–SM)

PROJECT NAME: Section 10 WWTP

CGC Project No: 402.01

SAMPLE: Source: Boring 8 @ 0–5'
Material: Native sand
Sampled By: Copeland

17–Dec–97

TESTED: ASTM: D698 Method:

	Method A Proctor Value	Rock Corrected Proctor Value
Maximum Density (pcf)=	101.5	101.5
Optimum Moisture (%)=	15.0	15.0

Percent Rock above No. 4 sieve (%) = 0.0

ASTM D698 – Moisture Density Test

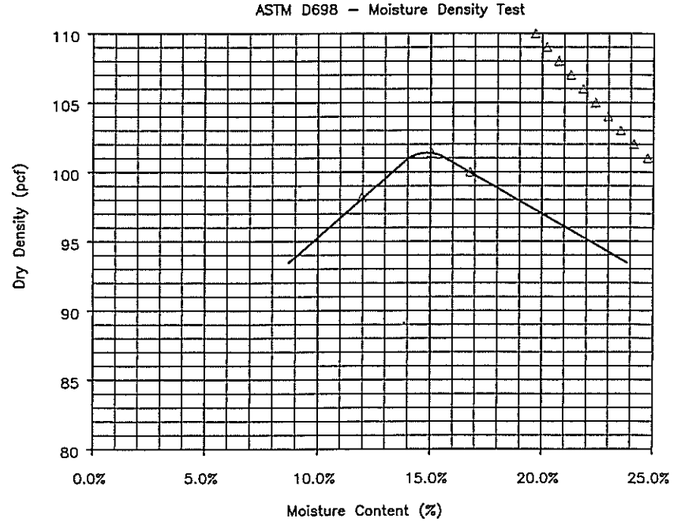

filename = C-SL-4 plot scale = 1=1

REVISIONS		
NO.	DATE	BY
1		
2		
3		
4		
5		
6		
7		

SUNRISE ENGINEERING, INC.
CONSULTING ENGINEERS & LAND SURVEYORS
3660 E. UNIVERSITY DR., SUITE 2
MESA, ARIZONA 85205 (602) 832-4420

SUNRISE ENGINEERING INC.

ALDEN J. ROBINSON — 12-98 — Arizona U.S.A.

BRENT L. (MUSK) CROTHER — Arizona U.S.A.

CITY OF BULLHEAD CITY
SECTION 10
WASTEWATER TREATMENT PLANT EXPANSION – 1998
GEOTECHNICAL TESTING

PROJECT NO.	
E6258	
DESIGNED: FDK, JNS	CHECKED: ACR
DRAWN: DLM	
DATE: 1–06–98	DRAWING NO.: C:SL.4
SCALE: NO SCALE	SHEET NO.: 16 of 259

DMJM+HARRIS

2777 East Camelback Road, Suite 200
Phoenix, Arizona 85016-4302

Tel: (602) 337-2777
Fax: (602) 337-2620

August 7, 2002

City of Bullhead City
1255 Marina Boulevard
Bullhead City, Arizona 86442-5733

Attention: Pawan Agrawal, P.E.

Re: Section 10 Wastewater Treatment Plant Expansion Project
Mohave County, Arizona
DMJM+HARRIS Project No. 5388.0002

Dear Mr. Agrawal:

DMJM+HARRIS is pleased to present this Geotechnical Investigation Report to the City of Bullhead City for the above referenced project. This report details our scope of work, and includes the results of our investigation as well as recommendations for the design of foundations, concrete slabs-on-grade, retaining walls, slopes, excavations, and other earthwork related elements.

We appreciate the opportunity to provide geotechnical services on this project. Should you have any questions concerning this report, please contact the undersigned.

Sincerely,
DMJM+HARRIS

Chase A. White, E.I.T.
Geotechnical Engineer

And:

Keith H. Dahlen, P.E.
Senior Geotechnical Engineer

Registered Professional Engineer (Civil) CERTIFICATE NO. 25151 KEITH H. DAHLEN Date Signed 8/07/02 ARIZONA, U.S.A.

Reviewed by:

Mark K. Gilliland, P.E.
Structural Section Manager

Cc: DSP,KHD, CAW, File 5388.501

TABLE OF CONTENTS

1.0 INTRODUCTION 1
2.0 FIELD & LABORATORY INVESTIGATION 1
3.0 REVIEW OF EXISTING DATA 3
4.0 SITE DESCRIPTION 3
5.0 GEOLOGIC DESCRIPTION & GROUNDWATER CONDITIONS 4
5.1 GEOLOGIC SETTING 4
5.2 GEOTECHNICAL PROFILE 4
5.3 SOIL MOISTURE & GROUNDWATER CONDITIONS 4
6.0 DISCUSSION & RECOMMENDATIONS 5
6.1 GENERAL 5
6.2 SPREAD FOOTINGS 5
6.3 CONCRETE SLABS, CAST-ON-GRADE 6
6.4 RETAINING WALLS 7
6.5 SITE GRADING 7
6.6 SEISMIC DESIGN 9
6.7 MOISTURE PROTECTION 9
6.8 EXCAVATIONS & SLOPE DESIGN 9
6.9 EARTHWORK FACTORS 10
7.0 CLOSURE 10
REFERENCES 11

APPENDICES

Appendix A – Site Plan and Test Boring Logs

Appendix B – Laboratory Test Results

1.0 INTRODUCTION

This geotechnical investigation report is submitted subsequent to an investigation performed by DMJM+HARRIS of the proposed expansion of the existing Bullhead City Section 10 Wastewater Treatment Plant located at 901 Richardo Avenue in Bullhead City, Arizona. The project site location is presented in Figure 1.

It is understood that this expansion project will double the capacity of the plant for four of the unit processes including: Oxidation Ditch, Clarifier, Dual-Media Filters, and Disinfection. Current plans indicate that the plant's capacity will be doubled by constructing new facilities for three of the four unit processes, including a new oxidation ditch, a new clarifier, and new tertiary filters, all mirroring the existing facilities. The new structures are planned to match the existing in kind, thereby doubling the capacity of the plant and also enabling the existing facilities to be taken offline for maintenance and repair without interruption of the plants service.

The elevations and dimensions of the planned new structures will match those of the existing facilities in order to maintain the existing hydraulic profiles and continuity within the plant systems. Preliminary expansion plans indicated that the new oxidation ditch would share a common wall with the existing oxidation ditch, but current plans will provide for a 12-foot separation between the perimeter walls.

Additionally, the locations of the proposed new tertiary filter tanks have been changed from the preliminary expansion plans. Current design plans now show the new filter tanks adjacent to, and immediately east of, the existing tanks, rather than immediately west of the existing tanks. The construction of the new filter tanks and slabs will require cuts to be made in the existing slopes at the southern and eastern sides of the new filters. In order to preserve an existing paved walkway and access route at the crest of the east slope, a retaining wall of up to 10 feet in height is planned.

2.0 FIELD & LABORATORY INVESTIGATION

Four auger test borings (B1 through B4) were drilled for this investigation within or near the footprints of the proposed new plant facilities using a CME 75HT drill rig owned and operated by Geomechanics Southwest, Inc. Site constraints including underground facilities and a lack of drill rig access prevented a planned additional boring from being advanced immediately adjacent to the existing filter tanks slab. Due to the site access constraints, and the originally proposed location of the retaining wall, Boring B1 was advanced at the top of the slope immediately west of the existing filter tanks to a depth of 40 feet. Boring B2 was advanced to a depth of 25 feet near the center of the proposed new clarifier tank, and Borings B3 and B4 were advanced to depths of 15 and 40 feet within/near the anticipated footprint of the proposed new oxidation ditch. Standard Penetration Test (split spoon) sampling was performed at intervals of five feet or less in the borings. Chase A. White, E.I.T, supervised the field investigation. The boring logs are presented in Appendix A. A site plan, which indicates the locations of the test borings, is also included in Appendix A.

Laboratory testing was performed on selected samples obtained from the test borings by Copeland Geotechnical in Prescott, Arizona. The tests performed include moisture content, sieve analysis, Atterberg limits (plasticity index), pH, resistivity, and sulfate, chloride and soluble

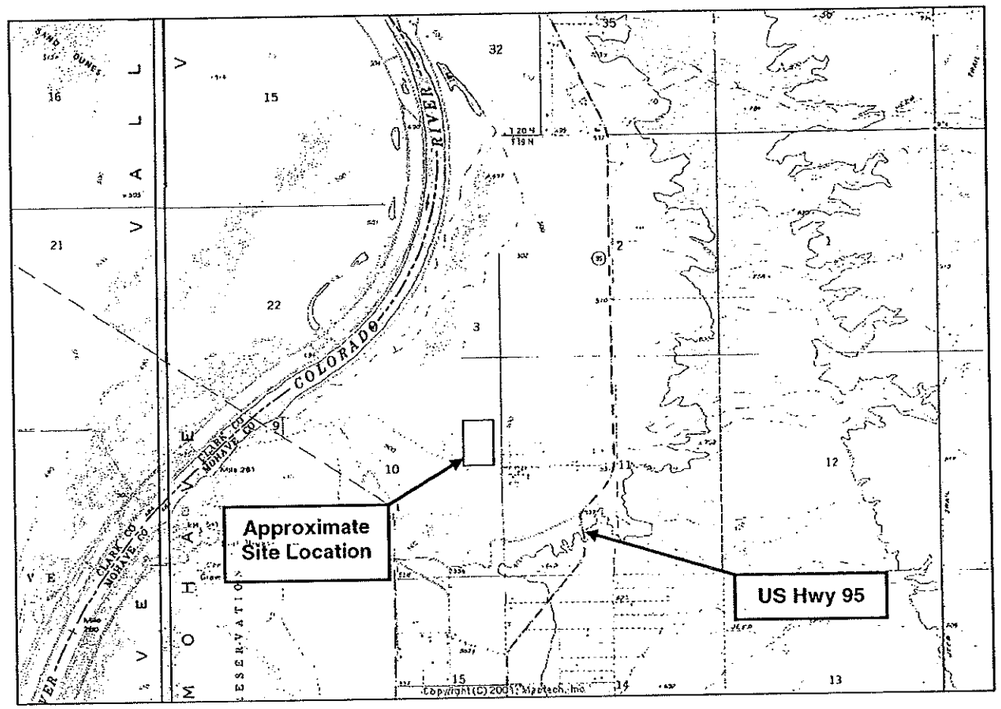

North
Not to Scale

Project Site Vicinity Map

FIGURE 1

salt contents. The moisture contents are presented on the boring logs and all of the results are presented in Appendix B.

3.0 REVIEW OF EXISTING DATA

Construction and as-built plans, including limited soil test boring and test pit log information, for the initial plant construction and first expansion project, prepared by A-N West, Inc. Consulting Engineers (1990) and Sunrise Engineering (1998), were reviewed during the preparation of our investigation plan and report recommendations. Copies of the geotechnical reports for the original construction, by Douglas A. Grisham Consulting Services (1990), and the first expansion project, by Copeland Geotechnical (1997), were provided to us and reviewed subsequent to the completion of our field investigation.

4.0 SITE DESCRIPTION

The project site is an active wastewater treatment plant, located in the southern portion of the City of Bullhead City, just over one mile east of the Colorado River. The treatment plant site is bordered by a perimeter fence and the surrounding area consists of mostly undeveloped and slightly disturbed river flatlands and sand dunes. A residential community is located just to the east of the project site along Richardo Avenue.

Development within the project site includes typical wastewater treatment plant facilities including administration, laboratory, storage, and maintenance buildings, an oxidation ditch structure, clarifier and sludge tanks, filter tanks, disinfection equipment, a sludge press building, and numerous small above- and below-grade equipment and process facilities. Other site features include asphalt paved roads and concrete curbs and sidewalks throughout.

Site topography is generally flat to slightly undulating, although several areas of the site have been built up several feet above surrounding and native grades to maintain the necessary hydraulic profiles for the plant process systems. General site drainage is to the west and southwest, towards the nearby Colorado River. An earthen berm is present around the entire facility to protect the site in-case of flooding.

Up to 6 feet of man-made fill was placed during the grading and construction operations for the first plant expansion in the areas of the existing oxidation ditch and clarifier. The original filter tanks, however, were built at the bottom of a large excavation, on the order of 15 to 20 feet below adjacent surrounding grades. The excavation is roughly square in plan, with slopes on the order of 3H:1V (Horizontal: Vertical).

The proposed new oxidation ditch and clarifier facilities will be constructed within areas not currently occupied by existing structures. The proposed new filter tanks, however, are located within an area of existing underground and at-grade features and improvements.

5.0 GEOLOGIC DESCRIPTION & GROUNDWATER CONDITIONS

5.1 GEOLOGIC SETTING

The project site is located in the Basin and Range Geologic Province of the southwestern United States. The Basin and Range Province is characterized by a modern landscape consisting of broad alluvial valleys interspersed with, and bound by, uplifted and fault-block mountain ranges, often with well-developed pediments and alluvial fans. Generally, the mountain ranges and valleys trend in a north-south to northwest-southeast direction. The modern landscape was formed by late Tertiary (Miocene-Pliocene) extensional tectonism and high-angle normal faulting, followed by subsequent erosion of the uplifted mountains and deposition of the sediments in the newly-formed basins.

The project site is located less than a mile from the existing channel of the Colorado River, and is within the historical floodplain. According to maps published by the Arizona Bureau of Mines, the project site is underlain by late Tertiary to Quaternary alluvial materials of substantial thickness. The near-surface materials consist of recent relatively loose alluvial and aeolian deposits.

5.2 GEOTECHNICAL PROFILE

The subgrade materials encountered within the test borings consist of alluvial sands with minor amounts of gravel and/or silt, and occasional lenses of clay. The sands are predominantly fine-grained and uniformly-graded. The relative density of the sandy soils range from very loose to dense, based on the SPT blowcounts recorded during test drilling. Interbedded lenses of high plasticity gray sandy clay were encountered in boring B4 at depths below 26 feet. Generally, the density of the soils encountered in the test borings is highly variable within the upper 15 to 20 feet. Below these depths, the density of the sandy subsoils typically increases with increasing depth.

5.3 SOIL MOISTURE & GROUNDWATER CONDITIONS

Groundwater was encountered within three of the test borings drilled for this project. The moisture conditions of the soils encountered above the groundwater table were described as slightly moist (with some essentially dry zones) to very moist, with tested moisture content values ranging from about 1 to 13 percent. Groundwater was encountered at approximate elevations of 480.0, 479.5, and 477.5 feet in borings B1, B2, and B4, respectively.

At the time of our exploration, the elevation of groundwater in the plant monitoring well was measured at approximately 480.0 feet. The monitoring well details on sheet 2 of the original plant construction plans by A-N West, Inc., (1990) indicate that the groundwater table was Elev. 475±5 feet at the monitoring well. The elevations of groundwater encountered in the test borings advanced for this investigation are likely to be at or near the maximum levels. The elevation of the groundwater table may rise or fall, however, due to seasonal fluctuations in river flow and/or local and regional precipitation.

6.0 DISCUSSION & RECOMMENDATIONS

6.1 GENERAL

It is understood that the dimensions, foundation bearing elevations, and general construction details and methods employed in the design of the clarifier, oxidation ditch, and filter tank foundation elements for the first plant expansion will be matched for the design of the current expansion facilities. The existing clarifier and oxidation ditch structures are supported by mat-type foundations with strip spread footings along perimeter walls and interior partitions. The existing filter tanks are supported by large mat-type foundation slabs with turn-down perimeter footings.

It appears, based on the test borings advanced at the site during the current and previous investigations, that the native granular alluvial soils encountered in the test borings should provide adequate support for the structures planned for this expansion of the plant. The soils at, and immediately below proposed footing elevations, however, are not sufficiently densified in their existing condition for support of the anticipated loads. With proper site grading and treatment of the supporting soils, and the use of relatively low allowable bearing pressures, the potential for long-term detrimental movements of spread or mat-type foundations would be considered to be low. Due to the granular nature of the site soils, the majority of any settlements that the soils will experience should occur immediately upon the application of the structure loads and be essentially complete by the end of construction. Recommendations for the design of spread- and mat-type foundations and concrete slabs-on-grade are presented in Sections 6.2 and 6.3. Recommendations for site grading and materials requirements are presented in Section 6.5.

The construction of the new filter tanks and foundation slabs will require cuts in the existing slopes and the construction of a retaining wall. The retaining wall will most likely be designed as a standard, cast-in-place concrete cantilever wall with a spread-type footing. Retaining wall design pressures and related issues are addressed in Section 6.4.

Deep excavations, where required for the structures, may be difficult to accomplish due to the non-cohesive nature of the site soils. Groundwater was encountered in many of the test borings advanced at the project site, and is known to be present at about elevation 480. Depending upon seasonal fluctuations, groundwater may impact the design and construction of proposed expansion facilities. Excavations made in the near vicinity of the existing filter tanks may encounter saturated soils. Recommendations regarding excavations are presented in Section 6.8.

6.2 SPREAD FOOTINGS

6.2.1 Vertical Capacity

An allowable bearing pressure (dead plus live load) of 1,500 pounds per square foot (psf) is recommended for the design of spread- and mat-type footings utilized for support of the planned expansion structures, provided that the footings are supported on properly prepared site soils, and within the elevation ranges given in the following table:

Structure	Bottom of Footing Elevation (feet)
Oxidation Ditch	Below 496.64(1)
Clarifier	Below 490.34(1)
Tertiary Filter Tanks	Below 482.93(1)
Retaining Wall	Below 483.0

(1) Based on bottom of footing elevations for existing structures given in plant expansion design plans by Sunrise Engineering, Inc. (1998).

The above allowable bearing value is based on footings which bear a minimum of 2.0 feet below lowest adjacent finished grade. The minimum width of continuous and isolated footings should be 1.33 feet and 2.0 feet, respectively. These allowable bearing pressures may be increased by one-third when considering short-term overload stresses, including those due to wind or seismic events. The allowable pressures given are net values, and the weight of soils above the footing elevations have been accounted for. If the site grading for this project will not result in finished grades matching those shown on the existing design plans, the bearing pressures should be reviewed.

6.2.2 Estimated Settlements

Provided that footings are constructed in accordance with the above recommendations, total settlements are anticipated to be less than ¾ inch. Differential settlements are anticipated to be on the order of ½ inch or less, provided the structures bear completely on properly prepared native site soils, and that moisture protection measures, as discussed in Section 6.7, are adhered to. Additional settlements would be anticipated should the underlying native soils experience substantial increases in moisture.

6.2.3 Coefficient of Friction and Passive Resistance Against the Edges of Footings

The recommended passive lateral soil resistance against the edges of footings should be considered to be equal to an equivalent fluid pressure of 300 pounds per square foot (psf), per foot of soil depth below the lowest adjacent finished grade.

A coefficient of base friction of 0.40 may be used for the design of footings subjected to lateral loads. This value should be decreased to 0.30 when used in conjunction with passive lateral pressure.

6.3 CONCRETE SLABS, CAST-ON-GRADE

A coefficient of subgrade reaction of 250 pounds per cubic inch (pci) should be utilized for the design of interior concrete slabs supported on a minimum of 4 inches of aggregate base course and properly compacted site soils. No aggregate base course is required beneath mat-type footing slabs.

Moisture barriers are not typically used beneath floor slabs in the semi-arid climate of Arizona, and such barriers are not recommended unless moisture-sensitive floor coverings are to be used. If plastic barriers are to be used, we recommend the use of 2 inches of sand above and

below the membrane in lieu of four inches of base material. The on-site sand soils would likely be appropriate for use in such an application.

6.4 RETAINING WALLS

Below grade walls, which retain earth, should be designed for the following equivalent fluid pressures:

Condition	Unit	Recommended Value
Active Pressure on Walls Free to Move at the Top a Distance of at least 0.001 Times the Height of the Wall	Equivalent Fluid Pressure	35 psf/ft
At Rest Pressure on Walls Restrained from Moving at the Top	Equivalent Fluid Pressure	55 psf/ft

The above lateral earth pressures do not include hydrostatic loads and are ultimate values, thus adequate drainage is an important design issue. All walls should be fitted with adequate drain systems and surficial infiltration behind the walls should be limited, as discussed in Section 6.5.2. Higher equivalent fluid pressures should be utilized for design of walls with sloping backfill. The equivalent fluid pressures are based on a friction angle of 33 degrees, a unit weight of 120 pcf for structure backfill and free-draining conditions. The effects of construction or live load surcharge is excluded in the above values and should also be considered.

6.5 SITE GRADING

6.5.1 Structure Slab & Footing Areas

The entire area designated for construction of each of the planned structures should be cleared of all existing vegetation, debris, rubble, fill soils, and other deleterious materials. The limits of clearance beyond the dimensions of the planned structures should be to a sufficient distance to accommodate the subgrade preparation recommendations presented herein.

Excavate and remove all existing soils within the structure footprint(s) down to the base of footing elevation(s). This excavation shall extend a minimum of three feet beyond the perimeter of the structure(s), in plan. Once accomplished, the excavation(s) should be observed by a representative of the geotechnical engineer for the presence of unacceptable soils, excessive moisture, or additional loose or soft zones. Additional overexcavation due to such conditions may be required at the discretion of the engineer. The base of the excavation should be free of mounds or depressions that may inhibit uniform compaction.

The exposed soil surface present at the foundation bearing elevation shall be scarified to a minimum depth of 8 inches, wetted as necessary (optimum or above), and vibratory compacted to achieve a minimum of 95 percent of the maximum dry density, as determined in accordance with ASTM D698, to a depth of at least 12 inches.

The native site soils may be placed as structural fill to backfill excavations as necessary provided the soils contain no particles larger than 6 inches in dimension and have a plasticity index of no more than 18. Structural fill shall be placed in loose horizontal layers no greater than 10 inches in thickness prior to compaction. All structural fill shall be compacted to a

minimum of 95 percent of the maximum dry density, as determined in accordance with ASTM D698, and to within 2 percent of the optimum moisture content.

6.5.2 Wall Backfill

Fill placed within 3 feet (measured horizontally) of the proposed below-grade wall should consist of granular backfill meeting the following requirements:

Item	Requirement
Percent Finer than 3-inch	100
Percent Finer than No. 200	15 (Maximum)
Plasticity Index	5 (Maximum)

Materials placed as wall backfill at a horizontal distance of at least 3 feet from the edge of below-grade walls should consist of common wall backfill meeting the following requirements:

Item	Requirement
Percent Finer than 6-inch	100
Percent Finer than No. 200	60 (Maximum)
Plasticity Index	15 (Maximum)

Based on the materials encountered in test borings advanced at the site, it appears that the majority of the native site soils should be acceptable for use as either granular or common wall backfill.

It is recommended that a surface cap of finer grained, low permeability soils be placed behind the wall and within 2.0 feet of finished ground. This surface cap will tend to reduce surficial seepage into the granular backfill behind the wall. These materials should not be used, however, in areas which will be overlain by pavements or other structures. The fine grained soils should meet the following requirements:

Item	Requirement
Percent Finer than No. 4	100
Percent Finer than No. 200	50 (Minimum)
Plasticity Index	5 –20

Soils meeting these gradation and plasticity requirements are not readily available at the project site and will likely need to be imported. Alternatives to the use of the fine-grained cap soils include placing a near-surface impermeable membrane behind the wall or paving the surface of the wall backfill with asphalt or concrete.

All wall backfill materials should be compacted to a density within the range of from 92 to 97 percent of the maximum dry density, as determined in accordance with ASTM D698, and to within 2 percent of the optimum moisture content. Overcompaction of wall backfill should not be allowed, as higher soil densities may cause excessive lateral earth pressures which could result in wall movements.

The walls should be constructed with adequate weep holes to evacuate excess water from behind the walls. If weep holes do not provide adequate drainage, an external drain system, such as perforated pipes along the wall perimeter feeding to a sump, should be installed. Materials which meet the requirements for common fill may be utilized directly behind the walls provided that geocomposite wall drains, such as TC Mirafi G100N, or an approved equal, is used against the wall in combination with adequate weep holes.

6.5.3 General Backfill Requirements

Native site soils may be used as fill materials required for general site grading and non-structural backfill of excavations, and should be placed in horizontal lifts of no more than 10 inches in thickness prior to compaction. All general backfill should be moisture conditioned to within 2 percent of the optimum moisture content and compacted to a minimum of 90 percent of the maximum dry density, as determined in accordance with ASTM D698.

6.5.4 Aggregate Base Course Requirements

Aggregate base (AB) should consist of well-graded sand and gravel materials and shall meet the prevailing local municipal specification(s) for such materials.

6.6 SEISMIC DESIGN

Based upon the materials encountered in the test borings and available geologic data, the following seismic design parameters are recommended in accordance with the 1997 Uniform Building Code (UBC):

Item	Recommendation
Table 16-J, Soil Profile Type	S_D
Table 16-U, Seismic Source Type	C
Table 16-S, Near Source Factor, N_a	1.0 (for source distance greater than 10 km)
Table 16-T Near Source Factor, N_v	1.0 (for source distance greater than 15 km)

6.7 MOISTURE PROTECTION

Adequate site drainage away from the structures and the prevention of ponding of water near the structures and on adjacent pavement surfaces is important in order to reduce the potential for subgrade weakening and foundation movements. Water should not be allowed to pond within 10 feet of the structures. A minimum outfall slope of 2 percent should be provided within 10 feet of the structures to carry surface water away before it can infiltrate the subgrade soils. Where possible, the edges of the structures should be immediately adjoined by AC or concrete slabs to limit the potential infiltration of moisture.

6.8 EXCAVATIONS & SLOPE DESIGN

6.8.1 Temporary Excavation Slopes

In general, temporary excavations should be performed in accordance with OSHA Health and Safety Standards for Excavations, 29 CFR Part 1926, Subpart P. In accordance with Subpart P, Appendix A, the site subgrade soils would be considered to be Type "C" soils. For

excavations of less than 20 feet, Subpart P, Appendix B indicates a maximum allowable unshored slope of 1.5H:1V. Due to the proximity of existing structures and facilities to the locations of the planned expansion structures, however, it will be necessary to limit the amount of excavation in some areas of the project site. The use of trench shields or shoring which accounts for the additional loadings imposed by the structures, will be required in areas where insufficient space exists to lay back temporary excavations to an inclination of 1.5H:1V.

Excavations made to Elev. 480 and below may encounter wet to saturated soil conditions, depending on seasonal variations in the groundwater table. De-watering operations will be required if excavations encounter groundwater. Additionally, the elevated moisture contents of the soils near the water table may cause the soils to become unworkable during compactive efforts. If such conditions are encountered, it may be necessary to allow the soils sufficient time to dry, and/or to work in additional dry granular material to provide a stable working base.

6.8.2 Permanent Slopes

Unprotected permanent cut and fill slopes may be safely constructed at inclinations as steep as 3H:1V, with a moderate potential for erosion. The existing cut slopes at the site were constructed at similar inclinations, and appear to be performing satisfactorily. Drainage swales or berms should be constructed at the top of slopes to prevent the flow of water directly across the face of any slope.

6.9 EARTHWORK FACTORS

In-place density testing for estimation of earthwork factors was not performed for this investigation. Based on the standard penetration test results determined from the borings, and moisture-density relationship data from previous investigations at the site, an earthwork factor of 5 to 10 percent shrink is estimated. This estimate applies only to the excavation and recompaction of the on-site soils.

7.0 CLOSURE

The recommendations presented in this report are based on a limited number of small diameter test borings, laboratory test data, our understanding of this project, and our general experience in the project area. The subsurface conditions identified are based on the conditions encountered only at the specific test locations at the time of drilling and it is anticipated that the subsurface conditions will vary between test locations and with seasonal climatic variations.

This report was prepared for the exclusive use of the City of Bullhead City, in accordance with the generally accepted standard of practice in Arizona and no warranty, expressed or implied, is made.

The scope of this project did not include an investigation for contaminated or hazardous materials. If the owner is concerned about the potential for such conditions, additional studies should be performed.

REFERENCES

A-N West, Inc., Consulting Engineers, 1990, Design Plans for City of Bullhead City Section 10 Wastewater Treatment Plant, Project No. 7051-16, November.

Copeland Geotechnical Consultants, 1997, Section 10 WWTP Expansion, Bullhead City, Arizona, Project No. 402.01, June 11.

Douglas A. Grisham, P.E., Consulting Services, 1990, Geotechnical Foundation Report, Wastewater Treatment Plant, Project No. CS0215, September 4.

Sunrise Engineering, Inc., 1998, Design Plans for City of Bullhead City Section 10 Wastewater Treatment Plant Expansion, Project No. E6258, January 6.

Wilson, E.D., and Moore, R.T., 1959, *Geologic Map of Mohave County, Arizona*, Arizona Bureau of Mines, Tucson, Arizona.

APPENDIX A

Site Plan and Test Boring Logs

CITY OF BULLHEAD CITY ENGINEERING DEPARTMENT

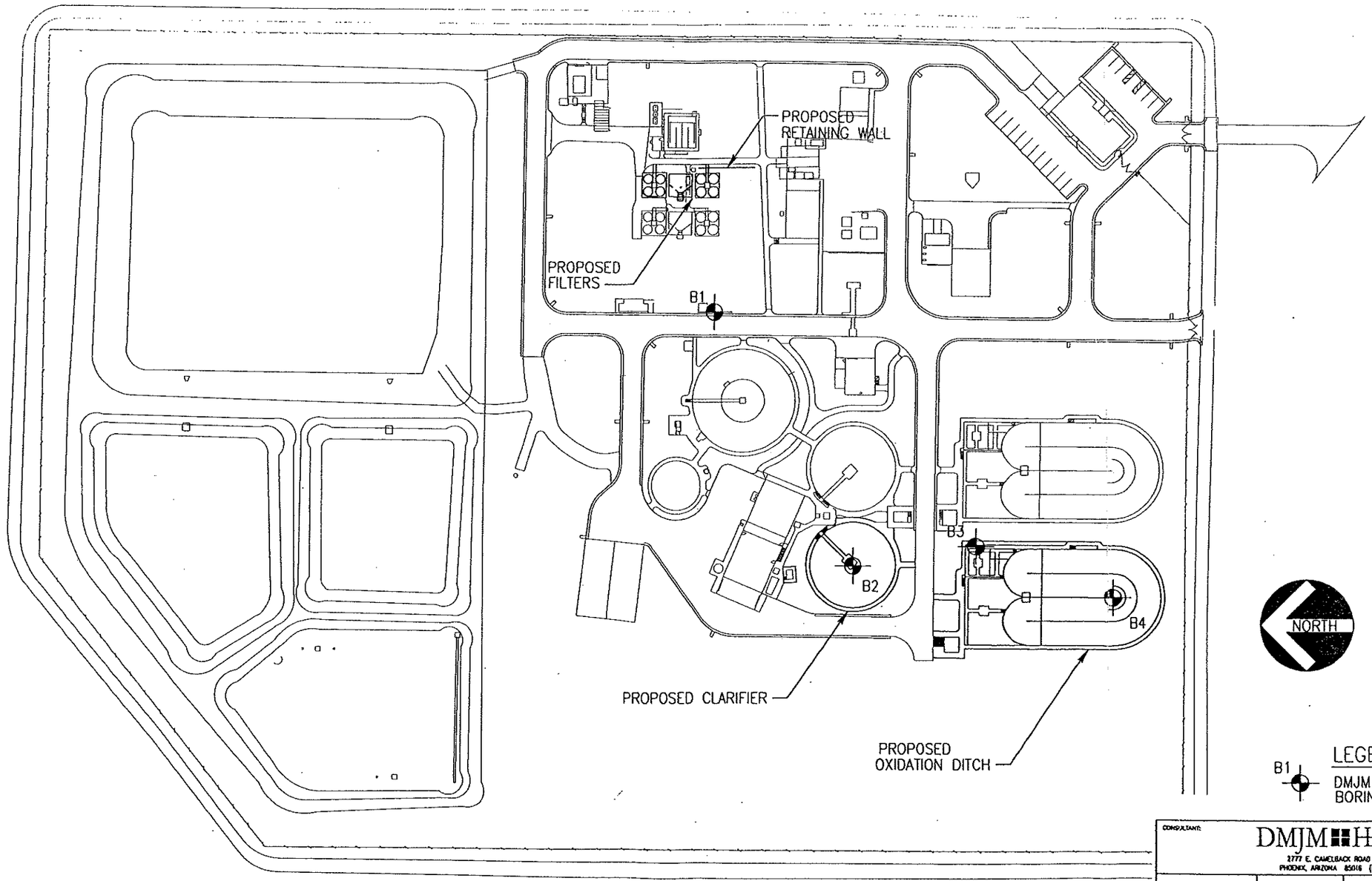

SCALE: 1"=100'

B1 LEGEND

DMJM+HARRIS TEST BORING LOCATION

n:\5388\Prod\geotek\5388sp01.dwg AutoCAD

1-800-782-5348

CONSULTANT:

DMJM HARRIS

1777 E. CAMELBACK ROAD SUITE 200
PHOENIX, ARIZONA 85016 (602)337-2777

DATE: 08/05/02

PROJ. NO: 5388

DRAWING NUMBER:

CATALOG NUMBER:

PRELIMINARY NOT FOR CONSTRUCTION

CITY OF BULLHEAD CITY
1255 MARINA BLVD.
BULLHEAD CITY, AZ. 86442

SITE PLAN SHOWING TEST BORING LOCATIONS

REVISED

DRAWN BY: CML
ENGINEER: JOHO
APPROVED BY: MKG

SHEET
OF

SAMPLING AND BORING LOG INFORMATION

The material and in-situ moisture descriptions presented on the boring logs are based on visual observation and classification in accordance with the United Soil Classification System (USCS), presented on the next page. The field logs were modified, where appropriate, based on laboratory testing of selected samples.

The relative density and firmness described on the test boring logs are in general based on standard penetration test (SPT) blows per foot (N) for mostly cohesionless and cohesive soils. Two-inch O.D. SPT samplers are advanced up to 18 inches into undisturbed soils beyond the base of either a hollow stem auger or drill casing. The samplers are driven with a 140 pound hammer and a 30-inch drop. SPT values are recorded on the boring logs for each 6-inch increment of penetration with sampler refusal based on a penetration of less than 6 inches and a blowcount of 50.

Relative Density

Relative density for mostly cohesionless, uncemented sands and sand and gravel mixtures is described based on the following SPT blowcounts:

N	Relative Density
0-4	Very Loose
5-10	Loose
11-30	Medium Dense
31-50	Dense
50+	Very Dense

Relative Firmness

Relative Firmness for cohesive and/or cemented soils including silts, clays and silty to clayey sandy and gravelly soils is described based on the following SPT blowcounts:

N	Relative Firmness
0-4	Very Soft
5-8	Soft
9-15	Moderately Firm
16-30	Firm
31-49	Very Firm
50+	Hard

Undisturbed samples of firmer soils, typically present in the southwest, are obtained with 3-inch O.D. samplers lined with 2.42 inch I.D. brass rings. The samplers are advanced up to 305mm into undisturbed soils beyond the base of either a hollow stem auger or drill casing. The samplers are driven with a 140 pound hammer and a 30-inch drop. The N value blowcounts are recorded on the boring logs for each 6-inch increment of penetration with sampler refusal based on a penetration of less than 12 inches and a blowcount of 100.

UNIFIED SOIL CLASSIFICATION SYSTEM (ASTM D2487)

Criteria for Assigning Group Symbols and Group Names Using Laboratory Tests				Group Symbol	Graph Symbol	Group Description
Coarse-Grained Soils (More than 50% Retained on No. 200 Sieve).	Gravels More than 50% of Coarse Fraction Retained on No. 200 Sieve.	Clean Gravels (Less than 5% Fines)		GW		Well Graded Gravels, Gravel-Sand Mixtures or Sand-Gravel-Cobble Mixtures.
				GP		Poorly Graded Gravels, Gravel-Sand Mixtures or Sand-Gravel-Cobble Mixtures.
		Gravels with More than 12% Fines	Fines Classify as ML or MH	GM		Silty Gravels, Gravel-Sand-Silt Mixtures.
			Fines Classify as CL or CH	GC		Clayey Gravels, Gravel-Sand-Clay Mixtures.
	Sands 50% or More of Coarse Fraction Passes No. 4 Sieve.	Clean Sands (Less than 5% Fines)		SW		Well Graded Sands, Gravelly Sands.
				SP		Poorly Graded Sands, Gravelly Sands.
		Sands with More than 12% Fines	Fines Classify as ML or MH	SM		Silty Sands, Sand-Silt Mixtures
			Fines Classify as CL or CH	SC		Clayey Sands, Sand-Clay Mixtures.
Fine-Grained Soils (50% or More Passes the No. 200 Sieve).	Silts and Clays (Liquid Limit Less than 50)		PI > 7 and Plots On Above "A" Line	CL		Inorganic Clays of Low to Medium Plasticity, Gravelly Clays, Sandy Clays, Silty Clays, Lean Clays
			PI < 4 or Plots Below "A" Line	ML		Inorganic Silts, Clayey Silts with Slight Plasticity
	Silts and Clays (Liquid Limit 50 or More)		PI Plots On or Above "A" Line	CH		Inorganic Clays of High Plasticity, Fat Clays, Silty and Sandy Clays of High Plasticity
			PI Plots Below "A" Line	MH		Inorganic Silts of High Plasticity, Silty Soils, Elastic Silts

PLASTICITY CHART

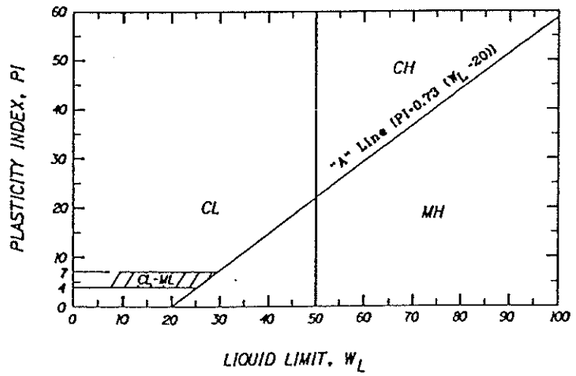

PLASTICITY	
PI=0	Non-Plastic
1≤PI≤7	Low
8≤PI≤25	Medium
PI≥25	High

ANGULARITY
Angular
Subangular
Subrounded
Rounded

MOISTURE
Slightly Moist
Moist
Very Moist
Wet
(Saturated)

SOIL PARTICLE DEFINITIONS

MATERIAL	PARTICLE SIZE RANGE
Boulders	Greater than 12 In.
Cobbles	12 In. to 3 In.
Coarse Gravel	3 In to $\frac{3}{4}$ In.
Fine Gravel	$\frac{3}{4}$ In. to No. 4 sieve
Coarse Sand	No. 4 Sieve to No. 10 Sieve
Medium Sand	No. 10 Sieve to No. 40 Sieve
Fine Sand	No. 40 Sieve to No. 200 Sieve
Fines (Silt or Clay)	Less than No. 200 Sieve

Project Name: Section 10 WWTP Expansion
Location: Bullhead City, AZ
Project Number: 5388.0002
Logged By: C. White

BORING LOG NO. B1
Date(s): 05/09/02
Rig & Boring Type: CME-75/6 5/8" HSA
Surface Elevation: 505.0' ±
Location: See Site Plan

Groundwater		
Depth	Hour	Date
25.0'	0930	05/09/02

Elev (ft)	Depth (ft)	Penetration Rate (Min./Ft)	Sample Interval	Sample Type & (Blowcounts)	Graphical Log	MATERIAL CLASSIFICATION & USCS	LABORATORY ANALYSIS: Dry Density (pcf)	LABORATORY ANALYSIS: Moisture Content (%)
				S(6-6-4)		SAND (SP-SM) Trace of Silt, Fine Grained Sand, Non-Plastic, Light Brown to Tan, Moist, Loose to Dense		
				S(3-13-21)		Note: Occasional Subangular Coarse Sand and Fine Gravel Below 2'		
						Note: Possible Man-Made Fill from 0 to 4'		
500.0	5			S(8-8-7)				
				A				2
495.0	10			S(1-1-1)		Note: Very Loose and Slightly Moist Below 10.5'		
490.0	15			R(4)				
485.0	20			S(2-2-3)		Note: Alternating Slightly Moist and Moist Zones Below 18', Occasional Interbedded Lenses of Fine Grained Subangular to Subrounded Gravelly Well-Graded Silty Sand Below 20'		
480.0	▽25			S(5-7-6)		SAND (SP) Occasional Fine Gravel & Coarse Sand, Fine to Medium Grained Subangular to Rounded Sand, Non-Plastic, Gray-Brown, Very Moist to Wet, Medium Dense to Dense		20
475.0	30			S(5-8-17)				18
470.0	35			S(9-18-20)				
465.0	40							

Sample Type
S-Split Spoon
R-Ring Sampler
A-Drill Cuttings

DMJM HARRIS
2777 E. CAMELBACK ROAD SUITE 200
PHOENIX, AZ. 85016-4302 (602) 337-2777

n:\5388\Prod\geotek\bcb181.dgn

Project Name: Section 10 WWTP Expansion
Location: Bullhead City, AZ
Project Number: 5388.0002
Logged By: C. White

BORING LOG NO. B1
Date(s): 05/09/02
Rig & Boring Type: CME-75/6 5/8" HSA
Surface Elevation: 505.0' ±
Location: See Site Plan

Groundwater		
Depth	Hour	Date
25.0'	0930	05/09/02

Elev (ft)	Depth (ft)	Penetration Rate (Min./Ft)	Sample Interval	Sample Type & (Blowcounts)	Graphical Log	MATERIAL CLASSIFICATION & USCS	LABORATORY ANALYSIS: Dry Density (pcf)	LABORATORY ANALYSIS: Moisture Content (%)
				S(8-7-9)		SAND (SP) Cont'd...		
						STOPPED AUGER @ 40' STOPPED SAMPLER @ 41'-6"		
460.0	45							
	50							
	55							
	60							
	65							
	70							
	75							
	80							

Sample Type
S-Split Spoon
R-Ring Sampler
A-Drill Cuttings

DMJM HARRIS
2777 E. CAMELBACK ROAD SUITE 200
PHOENIX, AZ. 85016-4302 (602) 337-2777

n:\5388\Prod\geotek\bcb181.dgn

Project Name: Section 10 WWTP Expansion
Location: Bullhead City, AZ
Project Number: 5388.0002
Logged By: C. White

BORING LOG NO. B2
Date(s): 05/09/02
Rig & Boring Type: CME-75/6 5/8" HSA
Surface Elevation: 499.5' ±
Location: See Site Plan

Groundwater		
Depth	Hour	Date
20.0'	1225	05/09/02

Elev (ft)	Depth (ft)	Penetration Rate (Min./Ft)	Sample Interval	Sample Type & (Blowcounts)	Graphical Log	MATERIAL CLASSIFICATION & USCS	LABORATORY ANALYSIS: Dry Density (pcf)	LABORATORY ANALYSIS: Moisture Content (%)
				S(8-13-10)		SAND (SP) Occasional Fine Gravel, Occasional Trace of Silt, Fine Grained Sand, Non-Plastic, Light Brown, Slightly Moist to Moist, Loose to Dense		
				S(7-11-10)				
494.5	5			S(6-7-5)				3
489.5	10			S(3-3-2)		Note: Occasional Very Thin Clay Lenses Below 10'		3
484.5	15			S(4-8-9)				
479.5 ▽	20			S(2-3-4)		Note: Brown, Wet Below 20'		
474.5	25			S(7-8-10)		SAND (SP) Trace of Fine Subrounded to Rounded Gravel, Fine to Medium Grained Subrounded Sand, Non-Plastic, Gray-Brown, Wet, Medium Dense		
						STOPPED AUGER @ 25' STOPPED SAMPLER @ 26'-6"		
469.5	30							
	35							
	40							

Sample Type
S-Split Spoon
R-Ring Sampler
A-Drill Cuttings

DMJM HARRIS
2777 E. CAMELBACK ROAD SUITE 200
PHOENIX, AZ. 85016-4302 (602) 337-2777

n:\5388\Prod\geotek\bcblB2.dgn

Project Name: Section 10 WWTP Expansion
Location: Bullhead City, AZ
Project Number: 5388.0002
Logged By: C. White

BORING LOG NO. B3
Date(s): 05/09/02
Rig & Boring Type: CME-75/6 5/8" HSA
Surface Elevation: 501.0' ±
Location: See Site Plan

Groundwater		
Depth	Hour	Date
None		

Elev (ft)	Depth (ft)	Penetration Rate (Min./Ft)	Sample Interval	Sample Type & (Blowcounts)	Graphical Log	MATERIAL CLASSIFICATION & USCS	LABORATORY ANALYSIS: Dry Density (pcf)	LABORATORY ANALYSIS: Moisture Content (%)
				S(7-8-8)		SAND (SP-SM) Trace of Silt, Fine Grained Sand, Non-Plastic, Light Brown, Slightly Moist to Moist, Loose to Medium Dense		1
				S(3-6-10)				1
496.0	5			S(3-3-4)				1
491.0	10			S(5-7-8)				
486.0	15			S(4-5-5)		Note: Thin Lenses of Brown Clay In 15' Sample		
						STOPPED AUGER @ 15' STOPPED SAMPLER @ 16'-6"		
481.0	20							
	25							
	30							
	35							
	40							

Sample Type
S-Split Spoon
R-Ring Sampler
A-Drill Cuttings

DMJM HARRIS
2777 E. CAMELBACK ROAD SUITE 200
PHOENIX, AZ. 85016-4302 (602) 337-2777

n:\5388\Prod\geotek\bcb183.dgn

Project Name: Section 10 WWTP Expansion
Location: Bullhead City, AZ
Project Number: 5388.0002
Logged By: C. White

BORING LOG NO. B4
Date(s): 05/09/02
Rig & Boring Type: CME-75/6 5/8" HSA
Surface Elevation: 499.5' ±
Location: See Site Plan

Groundwater		
Depth	Hour	Date
22.0'	1405	05/09/02

Elev (ft)	Depth (ft)	Penetration Rate (Min./Ft)	Sample Interval	Sample Type & (Blowcounts)	Graphical Log	MATERIAL CLASSIFICATION & USCS	LABORATORY ANALYSIS: Dry Density (pcf)	LABORATORY ANALYSIS: Moisture Content (%)
				S(4-5-4)		SAND (SP-SM) Trace to Some Silt, Fine Grained Sand, Non-Plastic, Light Brown, Slightly Moist to Moist, Loose to Medium Dense		
				S(3-4-4)				1
		A				Note: Weakly Lime Cemented Surface Crust		
494.5	5			S(3-4-5)				
489.5	10			S(2-4-4)		Note: Interbedded Thin Clay Lenses Below 10'		13
484.5	15			S(5-7-10)				
479.5	20			S(5-7-8)				
						Note: Interbedded with Gray, Medium to High Plasticity, Sandy Clay Below 26'		
474.5	25			S(5-6-10)				
469.5	30			S(8-11-15)		Note: Increased Silt, Gray Color Below 30'		
464.5	35			S(6-11-22)				
						STOPPED AUGER @ 35' STOPPED SAMPLER @ 36'-6"		
459.5	40							

Sample Type
S-Split Spoon
R-Ring Sampler
A-Drill Cuttings

DMJM HARRIS
2777 E. CAMELBACK ROAD SUITE 200
PHOENIX, AZ. 85016-4302 (602) 337-2777

n:\5388\Prod\geotek\bcbl84.dgn

APPENDIX B

Laboratory Test Results

MINUS 200 TEST RESULTS

Project Name: BHC Section 10 WWTP
Date Tested: 16-May-02

Sample Location	Sample Depth (feet)	% Passing #200 Seive	Plasticity Index
B 1	8 - 10'	7.8	Non-Plastic
B 2	5 - 6.5'	4.1	Non-Plastic
B 2	10 - 11.5'	1.0	Non-Plastic
B 3	0 - 1.5'	9.2	Non-Plastic
B 3	5 - 6.5'	2.3	Non-Plastic
B 4	3 - 5'	12.9	Non-Plastic
B 4	10 - 11.5'	27.0	Non-Plastic

pH TEST RESULTS

Project Name: BHC Section 10 WWTP
Date Tested: 16-May-02

Sample Location	Sample Depth (feet)	pH
B 1	8-10'	8
B 2	10-11.5'	8
B 4	3-5'	8

RESISTIVITY TEST RESULTS

Project Name: BHC Section 10 WWTP
Date Tested: 16-May-02

Sample Location	Sample Depth (feet)	Minimum Resistance (ohms)	Minimum Resistivity (Ohm-cm.)
B 1	8-10'	260	1725
B 4	3-5'	280	1858

Minimum Resistivity - R(ohms) x S.B.F.(cm.)

S.B.F. = 6.63 cm.

SPEEDIE
AND ASSOCIATES
GEOTECHNICAL / ENVIRONMENTAL / MATERIALS ENGINEERS
3331 E. WOOD STREET • PHOENIX, ARIZONA 85040

LABORATORY REPORT

Physical Properties of Soils and Aggregates

Client: Copeland Geotechnical
Attention: Stacy Moore
1011 Commerce Dr., Suite E, F, & G
Prescott, AZ 86305

Project No. 020096LA
# of Samples 5
Report Date: 06-07-02
Client Proj. #: 932.01

Project: Copeland Geotechnical Miscellaneous Testing (Project No. 932.01)
Location: Project No. 932.01
Material: Silty Sandy Soil Sampled By: Client Date 05-22-02
Source: Native Submitted By: Client Date 05-22-02
Supplier: N/A Authorized By: Client Date 05-22-02
Sample Markings: 932.01

Test Results

Speedie Lab ID	Sample Markings	Test Analysis	Method	Result	Units
114116	B3 @ 2.5-4' combined w/ B3 @ 5-6.5'	Sulfate	ADOT 733	101	PPM
		Chloride	ADOT 736	22	PPM
		Soluble Salts	ADOT 237b	1100	PPM
114117	B2 @ 5-6.5' combined w/ B2 @ 10-11.5'	Sulfate	ADOT 733	41	PPM
		Chloride	ADOT 736	19	PPM
		Soluble Salts	ADOT 237b	285	PPM
114118	B1 @ 25-26.5' combined w/ B1 @ 30-31.5'	Sulfate	ADOT 733	27	PPM
		Chloride	ADOT 736	56	PPM
		Soluble Salts	ADOT 237b	917	PPM
114119	B1 @ 8-10'	Sulfate	ADOT 733	59	PPM
		Chloride	ADOT 736	6	PPM
		Soluble Salts	ADOT 237b	1140	PPM
114120	B4 @ 3-5'	Sulfate	ADOT 733	390	PPM
		Chloride	ADOT 736	38	PPM
		Soluble Salts	ADOT 237b	1870	PPM

Comments:

Laboratory test results reported herein apply only to the specific sample on which the test was run. The above services and report were performed pursuant to the terms and conditions of the agreement or proposal, if any, between SA and client. SA warrants that this work was performed under the appropriate standard of care, including the skill and judgement that is reasonably expected from similarly situated professionals. No other warranty, guaranty, or representation, either express or implied is included or intended.

Reviewed by _____
Laboratory Manager

Project Name: BHC Section 10 WWTP

Project No: 932.01

Lab No: 002001

Date: 6/12/02

	Moisture wts.					Density Calculations					
T.B & Depth	Wet Wt. (gms.)	Dry Wt. (gms.)	Set #	# Rings	Wt. rings unused (gms.)	Soil+Rings Wt. (gms.)	Wet Density	M.C. (%)	D.D. (pcf)	Soil Description	USCS Soil Symbol
B1@8-10	163.09	159.89						2.0%			
B1@25-26.5	161.61	135.23						19.5%			
B1@30-31.5	154.36	130.33						18.4%			
B2@5-6.5	155.11	150.06						3.4%			
B2@10-11.5	164.30	159.59						3.0%			
B3@0-1.5	154.21	152.91						0.9%			
B3@2.5-4	162.71	160.43						1.4%			
B3@5-6.5	167.34	165.48						1.1%			
B4@3-5	153.05	151.08						1.3%			
B4@10-11.5	171.36	152.20						12.6%			

PART 1 GENERAL

1.01 WORK INCLUDED

A. This section includes furnishing and placing Flowable Fill to the lines and grades shown on the Drawings as backfill in trenches and/or at other locations. Flowable Fill is a self-compacting cementitious material using mineral aggregates (sand and/or gravel), native or processed materials, fly ash/cement, water, air entraining solution and (optionally) other admixtures. Flowable Fill is also known as Controlled Low-Strength Material (CLSM), Controlled Density Fill (CDF), and/or Non-Shrink Backfill.

B. Flowable Fill is only permitted when specifically called out on the Drawings or elsewhere in these Contract Documents, or when proposed by the Contractor and approved by the Engineer.

1.02 SUBMITTALS

A. The Contractor shall provide the Engineer with a mix design by either trial batch or field experience methods to verify the required compressive strength of the flowable fill at the 28 day age. Mix design requirements are described in Part 2 PRODUCTS hereinafter. Proportions shall be selected on the basis of unconfined, air cured compressive strength test specimens.

1.03 TESTING

A. The Owner shall retain an independent testing agency to perform occasional quality assurance tests on the flowable fill consisting of slump, air content measurements, and casting three cylinders for compressive strength tests. The required compressive strength test method and required range are described in Part 2 PRODUCTS hereinafter. Compressive strength tests shall be performed at frequencies of at least one test set per 150 cubic yards and at least one test set per day of placement.

PART 2 PRODUCTS

2.01 MIXTURE OF MATERIALS

A. Provide a mixture of the materials described below to produce a self-compacting cementitious material batched on a per cubic yard basis.

2.02 MATERIALS

A. Portland Cement: Portland cement shall conform to the requirements of ASTM C150, Type II.

B. Fly Ash: Fly Ash shall conform to ASTM C618, Class C or F.

C. Coarse Aggregate, Fine Aggregate and Native Materials: Any aggregate gradation which produces performance characteristics of the Flowable Fill specified herein will be accepted, except that the amount of material passing the No. 200 sieve shall not exceed 20 percent. Also, liquid limit and plasticity index shall not exceed 25 and 5, respectively. Aggregates shall conform to ASTM C33.

D. Water: Water used in mixing shall be clean and free of oil, salt, acid, alkali, sugar, vegetable matter or other substances injurious to the finished product.

E. Chemical Admixtures: Chemical Admixtures shall conform to the requirements of ASTM C494.

F. Air Entrainment: Conform to ASTM C260.

2.03 PROPORTIONS

A. A variety of sand/gravel aggregates, and/or native (or processed) materials meeting the above requirements in conjunction with appropriate amounts of Portland cement and flyash, air entraining solution, and (optionally) other admixtures may be used to produce the required mix properties described herein.

B. The Contractor shall submit to the Engineer a mix design based upon a trial batch or field experience, including the proportions and sources of all constituent materials, air entraining and (optionally) other admixtures, expressed as cubic yard batch weights. The mix shall contain a minimum of 50 to 75 pounds of cement and up to 250 pounds fly ash per cubic yard, with the remainder of the volumes composed of aggregates, water, and any approved admixtures. Measured compressive strength, air content and yield for the mix design trial batch (or for the field experience based mix design) shall be submitted.

2.04 COMPRESSIVE STRENGTH

A. Flowable Fill shall be designed to achieve a 28 day compressive strength of 500 psi when tested in accordance with ASTM C39. Test specimens shall be made in accordance with ASTM D4832.

2.05 CONSISTENCY

A. Consistency of the fresh mixture shall be such that the mixture may be readily placed without segregation. High flowability material generally shall have a slump greater than 8 inches.

B. As an alternative to slump testing, desired consistency may be approximated by filling an open-ended 3-inch diameter cylinder, 6 inches high, with the mixture and cylinder immediately pulled straight up. The correct consistency of the mixture will produce an approximate 8-inch diameter circular type spread without segregation.

C. Adjustments of the proportions of constituents may be made to achieve proper solid suspension and optimum flowability. However, strength requirements and proper yield shall be maintained for the actual batch weights.

PART 3 EXECUTION

3.01 CONSTRUCTION

A. Comply with ACI 304 and ASTM C94 for measuring, mixing, transporting, and placing the Flowable Fill, and as herein specified.

3.02 LIMITATIONS OF PLACEMENT

A. Mix and place only when the air temperature is at least 35 degrees F and rising. At the time of placement, Flowable Fill shall be at least 40 degrees F. Stop mixing and placement when the air temperature is 40 degrees F and falling.

B. Flowable Fill shall be placed by methods that preserve the quality of the material in terms of compressive strength, flow, homogenity, plasticity and workability. The material shall be transported, placed, and/or consolidated so that it flows easily around, adjacent to and under structures. It shall have the flow, consistency, and workability such that the material is self-compacting.

C. Protect freshly placed Flowable Fill from premature drying, excessive cold and freezing, or hot temperatures. The Flowable Fill surface shall be protected from air temperatures below 40 degrees F to protect against freezing. Begin curing immediately following placement and before the Flowable Fill surface has dried. Continue curing until the Flowable Fill has attained the 28 day strength requirement. This strength shall be determined prior to any load applications or construction activity, unless otherwise directed by an Engineer.

3.03 INSTALLATION AS BACKFILL OR PIPE BEDDING

A. Support and restrain utilities within the backfill area to prevent movement and flotation during installation of Flowable Fill. Protect structures and utilities from damage caused by hydraulic pressure of Flowable Fill before the Fill hardens. Prevent Flowable Fill from intrusion into utilities.

B. Place Flowable Fill by chute, pumping, or other approved methods. Place Fill in lifts to prevent lateral pressures from exceeding structural capacity of structures and/or utilities. Place Fill evenly on both sides of utilities to maintain alignment.

C. Place Flowable Fill to the elevations shown on the Drawings without vibration or other means of compaction.

3.04 INSTALLATION AS FILL FOR ABANDONED UTILITIES OR STRUCTURES

A. Verify pipes and/or conduits to be abandoned in place are not clogged and are sufficiently empty to permit gravity installation of Flowable Fill for entire length indicated to be filled. Seal lower end of pipes and conduits by a method designed to contain Flowable Fill and to vent trapped air caused by filling operations.

B. Place Flowable Fill using a method that ensures there are no voids. Fill pipes and conduits from the high end. Fill manholes, tanks, and other structures from grade level access points.

C. After filling pipes and conduits, seal both ends.

3.05 CLEANING

A. Remove any spilled and excess Flowable Fill from project site. Restore any facilities or site areas damaged or contaminated by Flowable Fill installation to their existing condition before installation.

END OF SECTION 31 23 23

PART 1 GENERAL

1.01 STANDARD SPECIFICATION

A. All applicable portions of this specification section in the Maricopa Association of Governments (MAG) Standard Specifications (Section 601) shall apply with the following additions, deletions, and/or modifications. Modifications are listed below with numbers corresponding to the MAG Standard Specification.

601.1 DESCRIPTION

A. Include FRP to list of flexible pipes (Add)

6.01.4.6 Compaction Densities (Add)

1. Meet the quality control and quality assurance testing requirements in Section 01 40 00, QUALITY CONTROL of this Project Manual.

END OF SECTION 31 23 33

(This page intentionally left blank)

SECTION 32 10 10
STREET EXCAVATION,
DIVISION 32 00 00 – EXTERIOR IMPROVEMENTS BACKFILL, AND COMPACTION

PART 1 GENERAL

1.01 STANDARD SPECIFICATION

A. All applicable portions of this specification section in the Maricopa Association of Governments (MAG) Standard Specifications (Section 301) shall apply with the following additions, deletions, and/or modifications. Modifications are listed below with numbers corresponding to the MAG Standard Specification.

3.01.3 RELATIVE COMPACTION (ADD THE FOLLOWING)

A. Field Density Testing

1. Meet the quality control and quality assurance testing requirements in Section 01 40 00, QUALITY CONTROL of this Project Manual.

3.01.7 MEASUREMENT – No Measurement will occur on Project

3.01.8 PAYMENT – Payment will be by lump sum and will be for work complete.

END OF SECTION 32 10 10

(This page intentionally left blank)

PART 1 GENERAL

1.01 DESCRIPTION

A. Asphalt Concrete Paving

1.02 RELATED SECTIONS

A. Section 31 23 00 – Earthwork

B. Section 32 10 10 – Street Excavation, Backfill and Compaction

1.03 REFERENCE SPECIFICATIONS, CODES, AND STANDARDS

A. Except as otherwise indicated in this Section, the Contractor shall comply with the City of Bullhead's Asphalt and Aggregate Specifications (City Specification) and the latest edition of the Maricopa Association of Governments (MAG) Standard Specifications referenced in the City Specification.

1.04 SUBMITTALS

A. Per the provisions of Section 01 33 00 Submittals of these specifications, prior to commencement of the work, Contractor shall submit for review the proposed mix design of each class of asphalt concrete and the tack coat material to be used in the work.

B. Certified Delivery Tickets. Where asphalt concrete is used, the Contractor shall provide certified weighmaster delivery tickets at the time of delivery of each load of asphalt concrete. Each certification shall show the public weighmaster's signature, and the total quantities by weight of all components of the specific design mix. Each certificate shall, in addition, state the mix number, total yield in cubic yards or tons and the time the batch was dispatched, when it left the plant, when it arrived at the job, the time that unloading began, and the time that unloading was finished.

1.05 QUALITY ASSURANCE

A. The work shall be performed in accordance with the latest edition of the City Specification, MAG Standard Specifications and the contract documents.

B. Materials incorporated in the work shall be obtained from the same source of supply throughout the life of the project unless the Contractor is otherwise granted written permission by the Engineer.

PART 2 MATERIALS

2.01 ASPHALT CONCRETE

A. Asphalt concrete as specified in the City Specification shall be as follows:

Pavement Replacement:

Coarse/Fine Aggregate Requirements: Low Traffic.

Marshall Mix Design: 1/2" Mix (3/4” minus).

Use a 75 blow Marshall, PG 70-10 asphalt binder, and hydrated lime as a mineral admixture. Marshall Mix Design Criteria shall conform to Table 11.2-2 in the City Specification.

2.02 TACK COAT

A. Tack coat shall be an asphalt emulsion of grade SS-1H or CSS-1H in accordance with the City Specification and Section 713 of MAG Specifications.

2.03 AGGREGATE BASE

A. See Section 31 23 00 Earthwork for Structures.

PART 3 EXECUTION

3.01 EXAMINATION

A. Contractor shall verify that compacted aggregate base meets density requirements and is dry prior to placement of asphalt concrete.

B. Contractor shall verify that gradients and elevations of aggregate base are correct prior to placement of asphalt concrete.

3.02 BASE COURSES

A. See Section 31 23 00 Earthwork for Structures.

3.03 PLACING AND FINISHING

A. Placing and Finishing shall be in accordance with Section 11.5 of the City Specification.

B. Temperature limitations in the City Specification apply.

C. Tack Coat shall be SS-1H or CSS-1H as specified in the City Specification. The tack coat between layers of new asphalt concrete will not be deleted when the drying bed is paved.

D. Smoothness shall be in accordance with the City Specification with the exception that in the drying bed the straight edge shall be placed both parallel and perpendicular to the center line of paving lanes. The surface shall vary by no more than three-eighth (3/8) inch for the first lift and one-quarter (1/4) inch for the final lift from the lower edge of the 12-foot straightedge when testing drying bed asphalt concrete for smoothness.

3.04 ACCEPTANCE

A. Acceptance Testing under Section 11.7 of the City Specification shall be the responsibility of the Contractor's Independent Testing Laboratory.

1. Acceptance testing for trench: Pavement replacement will be two lots unless all pavement replacement is completed in one day.

B. The allowable deviation and payment reductions specified in Section 11.7.1 of the City Specification are applicable Trench Pavement Replacement.

C. Pavement thickness provisions of the City Specification Section 11.9 are applicable to this project.

D. Section 11.10 Density of the City Specification is applicable with air voids in excess of 8% subject to a payment reduction.

END OF SECTION 32 12 16

(This page intentionally left blank)

PART 1 GENERAL

1.01 WORK INCLUDED

A. This section covers the work necessary to replace, when directed, all asphalt concrete, gravel surfacing, curbs, sidewalks, drainage facilities, piping, and other features damaged directly or indirectly by the operations incidental to the construction of the project.

PART 2 PRODUCTS

2.01 ASPHALT CONCRETE FOR REPLACEMENT AND/OR REPAIR

A. Asphalt concrete mix and tack coat shall be as specified in the Section 32 12 16, ASPHALT CONCRETE PAVEMENT.

2.02 CONCRETE

A. Concrete for curbs, sidewalks, pavement and miscellaneous construction shall be as specified in Section 03 30 00, CONCRETE.

2.03 PIPE FOR MISCELLANEOUS FACILITIES REPLACEMENT

A. All pipe which is damaged incidental to the construction shall be replaced with a new length of pipe which is identical to the damaged pipe, or as approved by the Engineer.

PART 3 EXECUTION

3.01 ASPHALT CONCRETE PAVEMENT REPLACEMENT

A. Bring the area to a smooth, even grade at the correct distance below the top of the pavement surface so as to provide adequate space for the leveling course and pavement. Trim existing pavement to a straight line to remove any pavement which has been damaged or which is broken and unsound to provide a smooth, sound edge for joining the new pavement.

B. Compact the subgrade with mechanical vibratory or impact tampers. Determine the amount and method of compaction necessary to prevent subsequent settlement, but as a minimum, 96 percent of its standard proctor maximum dry density. Any subsequent settlement of the finished surfacing during the warranty period shall be promptly repaired by the Contractor at the Contractor's sole cost.

C. Place sufficient leveling course material to obtain a thickness of at least 10 inches after compaction, and for proper matching with the adjacent existing

pavement. Place the leveling course for the full width of the area where pavement was disturbed, including bituminous surfaced shoulders.

D. Compact the leveling course with mechanical vibratory or impact tampers. Determine the amount and method of compaction necessary to prevent subsequent settlement. Any subsequent settlement of the finished surfacing during the warranty period shall be promptly repaired at the Contractor's sole cost.

E. Place the asphalt concrete on the prepared subgrade over the area to a depth of not less than 3 inches or the depth of the adjacent pavement, whichever is greater, but not more than 5 inches. Spread and level the asphalt concrete with hand tools or by use of a mechanical spreader, depending upon the area to be paved. Bring the asphalt concrete to the proper grade and compact by rolling or the use of hand tampers where rolling is impossible or impractical.

F. A tack coat of emulsified asphalt shall be applied to all match lines when joining new asphalt concrete to old asphalt concrete.

G. Roll with power rollers capable of providing compression of 200 to 300 pounds per linear inch. Begin the rolling from the outside edge of the replacement progressing toward the existing surfacing, lapping the existing surface at least 1/2 the width of the roller. If existing surfacing bounds both edges of the replacement, begin rolling at the edges of the replacement, lapping the existing surface at least 1/2 the width of the roller, and progress toward the center of the replacement area. Overlap each preceding track by at least 1/2 the width of the roller and make sufficient passes over the entire area to remove all roller marks and to produce the desired result, as determined by the Engineer.

H. The finished surface of the new compacted paving shall be flush with the existing surface and shall conform to the grade and crown of the adjacent pavement.

I. Immediately after the new paving is compacted, all joints between new and original asphalt pavement shall be painted with hot asphalt or asphalt emulsion and be covered with dry paving sand before the asphalt solidifies.

J. The surface smoothness of the replaced pavement shall be such that when a straightedge is laid across the patched area between the edges of the old surfacing and the surface of the new pavement, the new pavement shall not deviate from the straightedge more than ¼-inch.

K. Asphalt shall not be applied to wet material. Asphalt shall not be applied during rainfall, sand or dust storms, or any imminent storms that might

adversely affect the construction. The Engineer will determine when surfaces and material are dry enough to proceed with construction. Asphalt concrete shall not be placed (1) when the atmospheric temperature is lower than 40 degrees F, (2) during heavy rainfall, or (3) when the surface upon which it is to be placed is frozen or wet. Exceptions will be permitted only in special cases and only with prior written approval of the Engineer.

3.02 SIDEWALKS AND CURBS AND MISCELLANEOUS CONCRETE CONSTRUCTION

A. Replace concrete sidewalks and curbs to the same section width, depth, line and grade as that removed or damaged. Cut ends of existing curb to a vertical plane. Prior to replacing the sections, properly backfill and compact the trench to prevent subsequent settlement.

B. Cut ends of existing curbs to a vertical plane. Construct forms to match existing. Place concrete and finish exposed surfaces similar to adjacent curb.

C. Replace concrete sidewalks between scored joints and make replacement in a manner that will avoid a patched appearance. Provide a minimum 6-inch thick compacted leveling course of clean 3/4-inch minus crushed rock or gravel of quality hereinbefore specified. Finish concrete surface similar to the adjacent sidewalks. Score joints and finish edges with a steel edging tool.

3.03 STORM SEWERS, WATER MAINS, CULVERTS, AND MISCELLANEOUS PIPING

A. All storm sewers, water mains, catch basins, piping, or culverts that are removed because of interference with the new construction shall be removed so as to do the least possible damage to the pipe or basin. Pipe damaged by removal shall be replaced with pipe equal to the original at no expense to the Owner.

END OF SECTION 32 40 00

(This page intentionally left blank)

PART 1 GENERAL

1.01 WORK INCLUDED

A. This section presents and explains a tabulation of the piping to be used for each of the various piping systems for this project, and as specified in the various detail piping specifications in Division 40 00 00, PROCESS INTERCONNECTIONS.

PART 2 PRODUCTS

2.01 GENERAL

A. The piping systems being furnished and installed in this project under Division 40 00 00, PROCESS INTERCONNECTIONS are tabulated in the Piping Schedule included at the end of this section.

2.02 PIPING SCHEDULE

A. The Piping Schedule lists each service by name and by legend and tabulates the applicable detail piping specification section numbers for each piping material to be used in a given service and location.

B. The detail piping specification section numbers are referenced also as to nominal pipe size and location, exposed or buried, submerged, concrete encased, etc.

C. The test pressure for each piping service is listed in the Piping Schedule, as well as whether the test shall be hydrostatic or pneumatic. Text procedures are specified in Section 40 10 05, PIPING - GENERAL.

D. In locations where the referenced specifications for a service are unacceptable due to unique or localized physical limitations, specifications or acceptable alternative materials are listed in the “Notes/Remarks” column of the Piping Schedule. If not listed, the Contractor shall notify the Engineer for verification of an acceptable alternative.

E. Where the use of the material listed in the Piping Schedule is not intended but the quantity of the material does not warrant the inclusion of additional materials of construction in the “Notes/Remarks” column, materials of construction will be shown on the Drawings. The material to be used is shown by the standard abbreviation for the material listed herein. In addition, piping not identified by service is identified by material of construction. The appropriate Specification for that material is also listed.

2.03 ABBREVIATIONS

CI - Cast Iron
CISP - Cast Iron Soil Pipe
CLDI - Cement Lined Ductile Iron
CLSTL - Cement lined steel
CONC - Concrete
CPVC - Chlorinated polyvinyl chloride
CU – Copper

DI - Ductile Iron
ELDI - Epoxy - lined ductile iron
ELSTL - Epoxy-Lined Steel
FRP - Fiberglass Reinforced Plastic
GLDI - Glass-Lined Ductile Iron
GS - Galvanized Steel
HDPE - High density polyethylene
MTS - Mill Type Steel
PVC - Polyvinyl Chloride
SST - Stainless Steel
STL – Steel
THPVC – Thickwall PVC (AWWA C900)
WSTL – Welded Steel
< - Less than
≤ - Equal to or less than
> - Greater than
≥ - Equal to or greater than
X=H - Hydrostatic test
X=P - Pneumatic test
NR - Not required

2.04 COLOR CODES AND LABELS

A. Piping color codes and labels are specified and listed in Section 09 90 00, PAINTING.

2.05 RELATED WORK SPECIFIED AND PERFORMED UNDER OTHER SECTIONS

A. Other piping and duct on this project is specified in Division 26 00 00, PLUMBING and Division 23 00 00, HEATING, VENTILATING, AND AIR CONDITIONING (HVAC).EXECUTION

2.06 GENERAL

A. All piping listed in the Piping Schedule shall be installed in accordance with the referenced detail piping specifications.

END OF SECTION 40 02 05

(See Piping Schedule below)

PIPING SCHEDULE

PIPING SERVICE	LEGEND	PIPE SIZE (inches)	INSTALLATION	SPECIFICATION SECTION (a)	TEST PRESSURE AND TYPE (PSIG - X)(b)	NOTES/REMARKS (c)
Plant Air	PA	6" – 24" 10" 12" 10" – 14" 10" – 14"	INTERIOR EXPOSED EXTERIOR EXPOSED EXTERIOR EXPOSED BURIED CONCRETE ENCASED	40 05 10.04 40 05 10.09 40 05 10.04 40 05 10.04 40 05 10.04	15-P 15-P 15-P 15-P 15-P	A, C, D, A, C, E, F A, C, E, F A, C, E A, B, C
Instrument Connections				40 05 10.09	15-P	A
Intake and Blow-Off Duct				Per Division 23		

a) 40 05 10.04 Mill Type Steel Pipe and Fittings
40 05 10.09 Stainless Steel Pipe and Fittings
b) Testing Designation: X = test pressure; H = hydrostatic; P = pneumatic.
c) See Article 2.06 for applicable notes.

2.07 PIPING SCHEDULE NOTES

A. Test procedures for pressure pipes are specified in Section 40 05 10, PIPING - GENERAL.

B. Concrete encase piping below building slabs and under structures.

C. Provide protective coating as specified in Section 09 90 00, PAINTING.

D. Provide insulation for all interior exposed blower discharge piping as specified in Section 40 05 10, PIPING - GENERAL.

E. Connect to existing piping as shown on the Drawings.

F. Insert dielectric breaks where connecting pipes of dissimilar metal.

(This page intentionally left blank)

PART 1 GENERAL

1.01 WORK INCLUDED

A. The work of this section, and of the Detail Piping Specifications hereinafter, covers the material specification for most pipe, pipe fittings, and pipe accessories to be utilized, including methods of pipe jointing and general installation guidelines.

1.02 GENERAL

A. Like items of material provided hereunder shall be the end products of one manufacturer. All piping and accessories shall be new products.

B. See the GENERAL CONDITIONS and Division 01 00 00, GENERAL REQUIREMENTS, which contain information and requirements that apply to the work specified herein and are mandatory for this project.

1.03 SUBMITTALS

A. In addition to the requirements of Section 01 33 00, SUBMITTALS in Division 01 00 00, GENERAL REQUIREMENTS, the following information shall be provided:

1. Support Systems:

   a. Drawings of each piping system locating each support, hangar, guide and anchor, including seismic bracing.
   b. Identify support, hanger, guide, and anchor type by catalog number and shop drawing detail number.

2. Shop Fabricated Piping: Pipe design calculations and detailed shop drawings including:

   a. Detailed pipe sections, special fittings and bends, showing dimensions, coatings and other pertinent information.
   b. Laying drawing showing location of each pipe section and each special length; number or otherwise designate laying sequence on each piece.

3. Manufacturer catalog data and information for each specified product.

4. Joint types, materials, details and drawings for dissimilar buried pipes, restrained joints, couplings, and other similar piping accessories.

5. Manufacturer's instructions for special procedures and setting dimensions.

1.04 DELIVERY, STORAGE AND HANDLING

A. General:

1. Also see Section 01 66 00, PRODUCT SHIPMENT, HANDLING, STORAGE, AND PROTECTION for other requirements.

2. Accept all piping materials and accessories on site in manufacturer's original packaging and inspect for damage. Handle and store materials according to manufacturer's instructions.

B. Pipe:

1. Protect, support, and handle in a manner to prevent damage to the products, especially linings and coatings.

a. When necessary, provide shelter to store pipe and apply water to prevent excessive drying.
b. During cold weather, store pipe on supports to prevent damage to coating.
c. Do not store pipe on rock or other hard surface.

2. Use implements, tools, facilities, and equipment suitable for proper and safe protection and handling of piping; do not drop or dump pipe into trenches.

a. Use heavy canvas or nylon slings, not chains or cables, to lift pipe and fittings.

3. Cement-Mortar, Glass Lined or Epoxy Lined Pipe: Tightly close ends with polyethylene plastic wrap to protect cement-mortar, glass or polyethylene lining during shipment; leave plastic wrap on pipe until installation.

4. Remove pipe that is damaged beyond repair, in the opinion of the Engineer.

C. Rubber Gaskets:

1. Store in a cool, well-ventilated area.

2. Do not expose to the direct rays of the sun.

3. Do not allow contact with oils, fuels, or petroleum solvents.

1.05 SEQUENCING AND SCHEDULING

A. Slab, Floor, Wall, and Roof Penetrations:

1. Order wall pipes and sleeves sufficiently early to ensure they are available for placement in concrete forms.

2. Verify size and location of building and structure penetrations before forming and placing concrete.

1.06 SYSTEM DESIGN REQUIREMENTS AND QUALITY ASSURANCE

A. General:

1. The Specifications and Drawings are not all inclusive with explicit piping details; provide piping and perform work in accordance with laws and regulations and intended use, including:

a. Power Piping: ANSI/ASME B31.1 Code.
b. Process Piping: ANSI/ASME B31.3 Code.
c. Building Service Piping: ANSI/ASME B31.9 Code.
d. Sanitary Building Drainage and Vent Systems: ICBO/IAPMO Uniform Plumbing Code.
e. Fuel, Digester Gas, Natural Gas, and Propane Gas Piping: ANSI/ASME B31.2 Code.
f. Manufacturers Standardization Society (MSS) Pipe Hanger and Support Standards: MSS SP-58 and MSS SP- 69.

2. Pressure Ratings and Materials Specified: Represent minimum acceptable standards for piping systems.

3. Piping Systems: Suitable for the services specified and intended.

4. All pipe and equipment supports and hangers shall be designed to meet the requirements of the State of Arizona for seismic conditions as summarized in the General Structural Notes on the Drawings. Seismic provisions shall also meet the requirements specified in Section 22 05 48, VIBRATION AND SEISMIC CONTROLS FOR PLUMBING AND HVAC PIPING AND EQUIPMENT.

B. Buried Piping: Provide piping suitable for design conditions as follows:

1. H20-S16 traffic load (AASHTO Standard Specifications for Highway Bridges) with 1.5 impact factor.

2. Piping both with and without internal pressure.

PART 2 PRODUCTS

2.01 GENERAL

A. The materials to be used for the process piping systems shown on the Drawings are listed by service in Section 40 02 05, PIPING SCHEDULE. Specific material requirements are specified in the Detail Piping Specifications (DPS) hereinafter.

2.02 PIPE JOINTS FOR EXPOSED PIPING

A. Restrained flanged coupling adapters, dismantling joints, or unions shall be used where shown on the Drawings, or as necessary to facilitate installation or later access to inline equipment for service or replacement.

2.03 PIPE JOINTS FOR BURIED PIPING

A. Push-on joint pipe ends shall be used for 4-inch and larger PVC pipe buried below ground surfaces unless shown or detailed otherwise on the Drawings. All fittings shall be push-on joint restrained with concrete thrust blocking, and shall have a minimum pressure rating at least equal to that of the pipe service.

B. Push-on or mechanical joint pipe ends shall be used for ductile iron pipe buried below ground surfaces unless shown or detailed otherwise on the Drawings. All fittings for standard pressure services (less than 200 psi working pressure) shall be push-on joint restrained with concrete thrust blocking, mechanical joint restrained with concrete thrust blocking, or push-on joint or mechanical joint with alternate mechanical means of thrust restraint as specified hereinafter.

C. Thrust restraint shall be provided by concrete thrust blocks and/or alternate thrust restraint systems. Thrust blocks and alternate types of thrust restraint are not typically shown on the Drawings, but shall be provided on all buried pressure lines. Allowable soil bearing stress for sizing of concrete thrust blocks shall be 2,000 psf maximum.

D. Alternate mechanical thrust restraints for ductile iron pipe, with mechanical joints and push-on joints, shall incorporate a ductile iron restraint ring with individually actuated wedges and torque limiting twist-off nuts to ensure proper force on the wedges. Thrust restraints shall be EBAA Iron Sales, Inc. Megalug, or approved equal.

E. Push-on gasketed joints or flexible couplings shall be used to join buried steel pipe, unless shown otherwise. The flexible couplings shall be provided with thrust ties for all pressurized buried steel pipe. Flexible couplings shall be Dresser, Style 38; Smith-Blair, Style 411; or equal. Thrust ties shall

sustain the force developed by 1-1/2 times the operating test pressure specified.

F. Hex bolts, fasteners, thrust ties, and miscellaneous metals used for buried piping systems shall be series 300 stainless steel.

G. Within the limitations noted above, all pipe materials and joints do not necessarily have to be the same for all lines in a specific service, except that the materials and joints for any particular building, or between any two buildings, or for any particular buried line, shall be the same. An exception to this is where ends must be changed from push-on to flanged to accommodate valves or fittings.

H. No change in material or joint selection will be permitted after submittal of shop drawings and their final review by the Engineer.

2.04 JOINTS FOR DISSIMILAR PIPES

A. Joints between dissimilar buried pipe (steel and ductile iron, PVC and ductile iron, etc.) shall be made with flexible transition couplings as specified hereinafter.

B. Joints between dissimilar exposed pipe (steel and stainless steel, steel and ductile iron, copper and galvanized steel, etc.) shall be made with an insulated flange or dielectric union as specified hereinafter.

2.05 PIPE PAINTING AND LABELING

A. All exposed piping shall be painted for color coding and labeled as specified in Section 09 90 00, PAINTING.

2.06 BUILDING AND EQUIPMENT PIPING EXPANSION PROVISIONS

A. Pipe anchors shall be placed where required by Code or shown on the Drawings. Flexible couplings or expansion joints shall be provided for piping systems and at connections to equipment where shown. The Contractor may install additional pipe anchors and flexible couplings to facilitate piping installation, provided that he submits complete details describing location, pipe supports, and hydraulic thrust protection. Acceptable types of flexible couplings and expansion joints shall be as specified hereinafter.

2.07 PIPING SUPPORT SYSTEMS

A. Piping shall be supported, in general, as described hereinafter and as shown by the pipe support details on the Drawings, and in accordance with ASME B31.1 and B31.9, and MSS SP-58 and SP-69. Manufacturers'

catalog figure numbers are typical of the types and quality of standard pipe supports and hangars to be employed.

B. No attempt has been made to show all required pipe supports in all locations, either on the Drawings or in the details. The absence of pipe supports and details on any Drawings shall not relieve the Contractor of the responsibility for providing them throughout.

C. All submerged piping supports, guides, and fasteners and those installed below channel, basin, and wet well wall tops and cover slabs or other high humidity areas such as in piping galleries shall be Type 316 stainless steel. Concrete anchors and anchor bolts shall be as specified in Section 05 50 00, MISCELLANEOUS METAL ITEMS. All submerged metal piping or piping in high humidity areas shall be electrically isolated from the supports with a wrap of 1/4-inch by 3-inch neoprene rubber between the pipe and oversize clamps.

D. All support anchoring devices, including anchor bolts, inserts, and other devices used to anchor the support onto a concrete base, roof, wall or structural steel works, shall be of the proper size, strength and spacing to withstand the shear and pullout loads imposed by loading and spacing on each particular support.

E. Detailed shop drawings of all supports, including support anchoring devices, shall be supplied with the submittals specified hereinbefore.

F. Where piping connects to equipment it shall be supported by a pipe support and not by the equipment. A pipe support or hanger shall be installed adjacent to each pipe fitting or in-line device such as a valve or meter for all piping larger than 4-inch.

G. Pipe support system components shall withstand the dead loads imposed by the weight of the pipes filled with water. Commercial pipe supports and hangers shall have a minimum safety factor of 5. In seismic zones, pipe supports shall also comply with all seismic design requirements. See General Structural Notes on the Drawings for seismic loading and design requirements.

H. All exposed hangers, rods, clamps, protective shields, and metal framing support components and accessories shall be Type 316 stainless steel unless noted otherwise on the Drawings.

I. Pedestal pipe supports shall be adjustable, with stanchion, saddle, U-bolt, and anchoring flange. Provide neoprene waffle isolation pad under anchoring flanges, adjacent to equipment or where otherwise required to provide vibration isolation.

J. All piping shall be supported in a manner which will prevent undue strain on any valve, fitting, or piece of equipment. In addition, pipe supports shall be provided at changes in direction or elevation, adjacent to flexible couplings, and where otherwise shown. Pipe supports and hangers shall not be installed in equipment access areas, bridge crane runs, or other similar areas in locations where they will hinder operations and maintenance activities.

K. Brace all piping 2-½ inches inside diameter and larger for seismic forces in accordance with the General Structural Notes on the Drawings.

L. Horizontal piping shall be supported with adjustable swivel-ring, split-ring, or Clevis type hangers as shown, Anvil, Figure 104, 108, or 260; Eaton B-Line, Figure B3198H or B3100; or equal. Provide welding insulation saddles for insulated steel piping, Anvil Figure Series 160, Eaton B-Line Figure Series B3160, or equal.

M. Pipe hangers for copper and plastic piping shall be coated with a plastic or neoprene protective cover. No metal portion of a hanger, support, or brace shall contact pipe directly.

N. Stacked horizontal runs of small piping along walls shall be supported by a metal framing system as shown, Unistrut, Eaton B-Line Strut, Anvil-Strut, or equal. No pipe shall be supported from the pipe above it.

O. Horizontal piping hanger support rods shall be supported by attachment to the roof trusses (wood trusses not less than 2 -inches thick) with lag screws and angle clips; by attachment to steel beams with concentric loading I-beam clamps; or by attachment to concrete with inserts, brackets, or flanges fastened with concrete anchors; as required or as shown on the Drawings.

P. Vertical piping hangers and supports shall be channel and pipe straps manufactured by Unistrut, Eaton B-Line, Anvil, or equal. Piping supports for vertical piping passing through floor sleeves shall be stainless steel steel riser clamps.

Q. Unless noted otherwise on the Drawings, horizontal pipe support or hanger spacing and hanger rod sizing for steel and ductile iron pipe shall be as follows:

Pipe Size	Maximum Support and Hanger Span	Minimum Rod Size Single Rod Hangers
1-inch and Smaller	6 feet	1/4-inch
1-1/4-inch thru 2-1/2-inch	8 feet	1/4-inch
3-inch and 4-inch	10 feet	3/8-inch
6-inch	12 feet	3/8-inch

8-inch	12 feet	1/2-inch
10-inch and 12-inch	14 feet	5/8-inch
14-inch	16 feet	3/4-inch
16-inch and 18-inch	16 feet	7/8-inch
20-inch	18 feet	1-inch
24-inch	18 feet	1 ¼-inch
30-inch and larger	As shown on the Drawings	

R. The load rating for universal concrete inserts or other attachment devices shall not be less than that of the hanger rods they support.

S. When supporting cast iron, ductile iron, or steel pipe, locate hanger rods near all joints and at each change of direction.

T. Vertical sway bracing shall be provided where shown, or on 10-foot maximum centers.

U. See the Detail Pipe Specifications for stainless steel piping supports and hanger requirements.

V. U-bolt type supports that tighten directly onto the pipe at the top or bottom points shall not be used for plastic or thin-walled metal (such as copper, stainless steel, etc.) pipe.

2.08 SLAB, FLOOR, WALL, AND ROOF PENETRATIONS AND CLOSURES

A. All piping penetrations of slabs, floors, walls, and roofs shall be as shown on the Drawings. It shall be the Contractor's responsibility to verify the size and location of all building and structure penetrations prior to pouring concrete.

B. Steel and Stainless Steel Wall Pipes:

1. Thickness of steel and stainless steel wall pipes shall match corresponding piping to which attached.

2. Coat wall pipes with System No. 3 as specified in Section 09 90 00, PAINTING. Support wall pipes by formwork to prevent contact with reinforcing steel.

C. Pipe Sleeves:

1. Piping passing through concrete or masonry shall be installed through pipe sleeves where shown on the Drawings. Holes drilled with a suitable rotary drill will be considered in lieu of sleeves in existing walls. Plastic sleeves or stainless steel sleeves shall be used for this project. Plastic sleeves shall be made of HDPE thermoplastic

with molded-in waterstop and reinforcing ribs, as manufactured by Link-Seal, Model CS, or equal.

2. Wall or floor sleeves shall be coated with the appropriate system for the intended location as specified in Section 09 90 00, PAINTING. When placing sleeves in concrete forms, support them by formwork to prevent contact with the reinforcing steel.

2.09 CORROSION PROTECTION

A. Welded steel pipe shall be coated per Section 09 90 00, PAINTING, to protect it from corrosion.

B. Stainless steel where in direct contact with concrete shall be protected by suitable coatings as specified in Section 09 90 00, PAINTING.

2.10 PIPE COUPLINGS AND EXPANSION JOINTS

A. General: Flexible couplings, flanged coupling adapters, restrained couplings, and transition couplings shall be provided where shown on the Drawings. Size shall be compatible with the outside diameter of pipe(s) on which the coupling is installed. Flexible couplings, transition couplings, and flanged coupling adapters shall be provided with thrust ties where required, including those not shown on the Drawings. Thrust ties shall be attached to steel pipe with fabricated lugs, and to ductile iron pipe with cast-in-place lugs or flange lugs or socket clamps thrust tied across pipe couplings or flanges. Thrust protection shall be adequate to sustain the force developed by the greater of 1.) pipe operating pressure plus transient surge pressure, or 2.) pipe test pressures specified. Buried pipe coupling's coating system shall be fusion bonded epoxy and all bolts and nuts shall be Type 316 stainless steel. Exposed pipe couplings coating system shall match the adjoining pipeline and nuts and bolts shall match the pipeline bolting system specified in the Detailed Pipe specifications.

B. Transition Couplings: Transition couplings used to connect pipes with small differences in outside diameter shall be Smith-Blair Omni Style 411 or 441, or Style 413 or 415; PowerSeal Pipeline Products Style 3501; Dresser Style 62 or 162; or equal. Minimum working pressure shall be 150 psi, unless noted otherwise or used for high pressure service.

C. Flanged Coupling Adapters: Restrained flanged coupling adaptors for ductile iron and steel piping shall be Series 911 as manufactured by Smith-Blair; Series 2100 Megaflange as manufactured by EBAA Iron; Style RFCA as manufactured by Romac Industries; or equal. Restrained flanged coupling adaptors for thickwall PVC piping shall be Series 920 as manufactured by Smith-Blair; Series 2100 Megaflange as manufactured by

EBAA Iron; Style RFCA-PVC as manufactured by Romac Industries; or equal. Minimum working pressure shall be 150 psi, unless noted otherwise or used for high pressure service.

D. Dismantling Joints: Restrained dismantling joints for ductile iron and steel piping shall be Romac Industries Style DJ400; Smith-Blair Style 971; or equal. Minimum working pressure shall be 150 psi, unless noted otherwise.

E. Expansion Joints and Bellows Type Flexible Couplings: Expansion joints and flexible couplings are not necessarily shown on the Drawings, but these joints and couplings and associated pipe anchors shall be provided by the Contactor, as required to allow for thermal expansion due to differences between installation and operating temperatures. Rigid gallery and trench piping, such as screwed, soldered, grooved end, and socket weld systems, shall provide for pipe expansion by the use of expansion joints, as specified herein:

1. For Flanged Steel Pipe: Expansion joints shall be elastomer bellows expansion joints and shall be reinforced, molded wide arch type with 125-pound ANSI flanged ends, split galvanized steel flange retaining ring, and control rods to protect the bellows from overextension. The bellows arch shall be non-filled and shall have an inner lining of an elastomeric blend suitable for the design application; lining shall be EPDM. **Expansion joints for low pressure air service shall be rated for use at operating temperatures of up to 250 degrees F.** Rated torsional rotation shall be minimum 2 degrees for all sizes. Burst pressure shall be four times the working pressure rating. Minimum compression, extension, lateral deflection, and minimum working pressure ratings shall be as follows unless noted otherwise or used for high pressure services.

Size, in	Compression, in	Extension, in	Lateral Deflection, degrees	Working Pressure, psig
2 - 4	1.4	0.7	0.6	200
5 - 10	1.6	0.8	0.7	190
12 – 20	1.6	0.8	0.8	115
24 - 36	2.0	1.0	0.9	90

2. Flange bolt set for elastomer bellows expansion joints shall include washers over the split steel retaining rings to help provide a leak-proof joint under pneumatic test pressures. Expansion joints shall be General Rubber Corp., Style 1015 or 1101; Proco Style 231;or equal.

F. Concrete Encased Couplings: Couplings encased in concrete shall be sleeve type couplings, Dresser, Smith-Blair, or equal, and not grooved end type couplings.

2.11 TAPPING SLEEVES

A. Pipe tapping sleeves for thickwall PVC, ductile iron, or steel pipe shall be Smith-Blair Product No. 622, or equal, size as shown on the Drawings. Tapping sleeves shall be able to withstand 175 psig internal pressure without leakage or overstressing. The run diameter shall be compatible with the outside diameter of the pipe on which the tapping sleeve is installed. Taps shall be flanged, AWWA C207 Class D, ANSI 150 pound drilling. Sleeves shall be constructed of carbon steel with a fusion bonded epoxy coating. All bolts and nuts shall be Type 304 stainless steel.

2.12 INSULATION

A. All insulation shall be installed per the manufacturer's recommendations.

B. Indoor Piping Systems:

1. Insulation for indoor piping shall be heavy-density, sectional, preformed glass-fiber insulation with factory-applied, vinyl-coated, and embossed vapor jacket, self-sealing lap, and UL rating. Laps and butt joints shall be sealed with pressure-sensitive joint sealing tape of the same finish as the insulation jacket, to provide a continuous vapor seal. Insulation shall be Owens-Corning, Fiberglass ASJ/SSL-II; Johns Manville, Micro-Lok HP with ASJ jacket; or equal.

2. Insulate indoor fittings with pre-molded insulation or mitered segments, wired in place, and finished with a thin coat of insulating cement, or wrapped with soft fiberglass insulation inserts covered with pre-molded PVC fitting covers. Secure cover and wrap throat and seams with matching PVC tape. Fitting covers shall be Johns Manville Zeston, Speedline, or equal.

3. Insulation at each pipe hanger and support shall include preformed rigid cell, half-round insulation, with factory-applied, vinyl-coated, and embossed vapor jacket, self-sealing lap, and UL rating. Minimum length shall be 8 inches, centered at each pipe hanger and support, and equal in thickness to the adjacent insulation.

C. Pipe Insulation Schedule: Unless shown otherwise, minimum insulation thicknesses shall be as shown in the following table:

Description	Pipe Size	Insulation Thickness	
		Indoor	Outdoor
Air, Low Pressure (ALP)	ALL	1”	n/a

2.13 CONCRETE

A. Thrust Blocks and Encasement: Provide of minimum 4,000 psi at 28 days in accordance with Section 03 30 00, CONCRETE.

PART 3 EXECUTION

3.01 GENERAL

A. Install all piping, fixtures, equipment, and accessories in strict accordance with the plumbing laws, rules, and regulations of the state or county, and of the City of Bullhead City, whichever represents the higher standard. All work shall be approved by the state, county, and/or the City plumbing inspector. All work shall also be installed according to AWWA C600 and C605.

B. Drawings do not attempt to show exact details of all piping, and no extra payment will be allowed for obstruction by work of other trades or local obstructions to the work under this Contract which require offsets. Where diagrams have been made to show piping connections, the Contractor is cautioned that these diagrams must not be used for obtaining material quantities. Changes in location of equipment or piping, advisable in the opinion of the Contractor, shall be submitted to the Engineer for approval before proceeding with the work. All measurements and dimensions shall be verified at the site.

C. In piping that is not flanged, install unions in piping system wherever they will expedite removal of equipment and valves.

3.02 PIPE PREPARATION AND HANDLING

A. Each pipe and fitting shall be carefully inspected before the exposed pipe or fitting is installed or the pipe or fitting is lowered into the trench. Interior and exterior protective coatings shall be inspected, and all damaged areas patched in the field with material similar to the original. Plastic pipe shall not have scratches exceeding manufacturer recommended depths. Clean ends of pipe thoroughly. Remove foreign matter and dirt from inside of pipe and keep clean during and after laying.

B. Use proper implements, tools, and facilities for the safe and proper protection of the pipe. Carefully handle pipe in such a manner as to avoid

any physical damage to the pipe. Do not drop or dump pipe into trenches under any circumstances.

C. Pipe Cutting: Cutting for closure or other reasons shall be done neatly by methods which will not damage pipe. Plastic pipe shall be cut with fine tooth saw, cutter, or knife designed for use with plastic pipe. Burrs shall be removed by smoothing edges with a knife, file or sandpaper. Spigot end shall be beveled.

3.03 INSTALLATION OF BURIED PIPING

A. General:

1. Buried piping locations are shown on the Drawings. In general, unless specifically shown otherwise in the Drawings, piping elevations and grades are not shown for all buried piping. Where pipe system invert elevations are shown on the Drawings, piping shall be installed in a straight line between adjacent elevations. Where buried pressure piping is shown on the Drawings without elevations and grades, the Contractor shall run buried piping along the lines indicated at the minimum depth of bury specified herein or as required to provide an acceptable installation, in which case the depth of bury shall not be less than that specified. The Contractor shall verify the location of existing piping prior to the submittal of pipe laying and fabrication drawings for review by the Engineer. Where interferences are encountered, the Contractor shall make necessary modifications to the piping indicated in the Drawings. Modifications shall be provided to the Engineer for review as part of the requirements of the piping submittals during construction.

2. Locating Piping Interferences: The Contractor shall perform all necessary work required to determine the location and depth of bury of existing piping where possible interferences with proposed locations of new piping may exist, including "pot-holing" to expose the piping surface. Contractor shall inform the Engineer of his intent to do such work a minimum of 24 hours prior to the commencement of such work.

B. Preparation of Trench: Trench Excavation and Backfill and Stabilization shall be in accordance with Section 31 23 33, TRENCH EXCAVATION AND BACKFILL FOR PIPELINES AND APPURTENANT STRUCTURES and as specified below:

1. Provide pipe base material for supporting the pipe for the full width of the trench. Minimum depth of pipe base below the pipe barrel shall

be 6 inches. Depth of pipe base under the pipe bell shall not be less than 4 inches.

2. Hand-grade pipe base to proper grade ahead of pipe laying operation. Pipe base shall provide a firm, unyielding support along the entire pipe length.

3. If the trench has been excavated below the required depth for pipe base placement without direction from the Engineer, fill the excess depth, at the Contractor's own expense, with the pipe base specified herein or foundation stabilization material as specified in Section 31 23 33, TRENCH EXCAVATION AND BACKFILL FOR PIPELINES AND APPURTENANT STRUCTURES to the proper subgrade. Place the pipe base or foundation stabilization material for the full width of the trench in layers not exceeding 6 inches deep and compact each layer, until the material does not yield or move, to the grade established for the pipe bedding.

C. Laying Buried Pipe:

1. General:

a. All buried pipe shall be prepared as hereinbefore specified and shall be laid on the prepared granular base as specified in Section 31 23 33, TRENCH EXCAVATION AND BACKFILL FOR PIPELINES AND APPURTENANT STRUCTURES and bedded to ensure uniform bearing. No pipe shall be laid in water or when, in the opinion of the Engineer, trench conditions are unsuitable. Joints shall be made as herein specified for the respective types. Take all precautions necessary to prevent uplift and floating of the pipe prior to backfilling.

b. Do not deviate more than 1-inch from line or 1/4-inch from grade. Measure for grade at the pipe invert, not at the top of the pipe, because of permissible variation in pipe wall thickness.

c. Grade the bottom of the trench by hand to the line and grade to which the pipe is to be laid, with proper allowance for pipe thickness and for pipe base when specified or indicated. Remove hard spots that would prevent a uniform bearing. Before laying each section of the pipe, check the grade with a straightedge and correct any irregularities found. The trench bottom shall form a continuous and uniform bearing and support for the pipe at every point between bell holes, except that the grade may be disturbed for the removal of lifting tackle.

d. At the location of each joint, dig bell (joint) holes of ample dimensions in the bottom of the trench and at the sides where necessary to permit easy visual inspection of the entire joint.

e. Provide and maintain ample means and devices at all times to remove and dispose of all water entering the trench during the process of pipe laying. The trench shall be kept dry until the pipe laying and jointing are completed. Removal of water shall be in conformance with specifications in Section 31 23 33, TRENCH EXCAVATION AND BACKFILL FOR PIPELINES AND APPURTENANT STRUCTURES and Section 31 23 00, EARTHWORK FOR STRUCTURES.

f. When the pipe laying is not in progress, including the noon hours, the open ends of pipe shall be closed, and no trench water, animals, or foreign material shall be permitted to enter the pipe.

g. Where the pipe is connected to concrete structures, the connection shall be made as shown on the Drawings. If the connection is not shown, make connection such that a standard pipe joint is located no more than 24 inches from the structure.

2. Installation of Concrete Embedded Piping:

a. Concrete embedded piping shall be installed as shown on the Drawings and as specified in Section 03 30 00, CONCRETE. Maximum allowable distortion for concrete embedded steel pipe is 3 percent of the pipe inside diameter. The Contractor shall perform all necessary work required to insure pipe distortion is minimized including bracing pipe inside diameter, reinforcing pipe circumferentially, increasing pipe wall thickness, and controlling concrete placement where required.

b. All concrete embedded metallic piping shall be supported as required to prevent contact with reinforcing steel during concrete installation.

c. Wall Pipes and Pipe Sleeves: Wall pipes and pipe sleeves embedded in concrete walls, floors, and slabs shall be embedded as specified in Section 03 30 00, CONCRETE and as shown. Support all pipes embedded in concrete walls, floors, and slabs with formwork to prevent contact with the reinforcing steel.

D. Connecting Dissimilar Pipe Materials:

1. Connect dissimilar pipe materials by means of a flexible coupling specified hereinbefore. Install couplings in strict accordance with the manufacturer's recommendations.

3.04 INSTALLATION OF FLEXIBLE COUPLINGS, FLANGED COUPLING ADAPTERS, TRANSITION COUPLINGS, AND RESTRAINED COUPLINGS

A. Prior to installation, thoroughly clean oil, and dirt from the pipe to provide a clean seat for the gasket. Care shall be taken that the gaskets are wiped clean before they are installed. Flexible couplings, flanged coupling adapters, and transition coupling gaskets shall be lubricated with manufacturer’s standard lubricant before installation on the pipe ends. Install in accordance with the manufacturer's recommendations. Bolts shall be tightened progressively, drawing up bolts on opposite sides until all bolts have a uniform tightness. Workmen tightening bolts shall use torque-limiting wrenches.

3.05 INSTALLATION OF EXPOSED PIPING

A. All pipe flanges shall be set level, plumb, and aligned. All flanged fittings shall be true and perpendicular to the axis of the pipes. All bolt-holes in flanges shall straddle vertical centerline of pipes.

B. Piping shall be installed without springing or forcing the pipe in a manner which would set up stresses in the pipe, valves, or connected equipment.

C. Unless shown otherwise, piping shall be parallel to building lines. Hangers on adjacent piping shall be aligned where possible on common size ranges.

D. On screwed or welded pipe, unions shall be installed where required for piping or equipment installation, even though they are not shown on the Drawings.

E. Plastic flanges shall be bolted up using a filler gasket at any joint with a raised face. The filler gasket shall bear the bolt load uniformly and remove the flange moment from that part of the flange protruding beyond the outer edge of the raised face.

F. Pipe taps to the pipe barrel are unacceptable. Pipe tap connection to ductile iron piping shall only be made at a tapping boss of a fitting, valve body, or equipment casting. Pipe tap connections to steel piping shall be made only with a welded thread-o-let connection.

G. Required straight runs of piping upstream and downstream of flow measuring devices shall be smooth.

H. Where valve hand wheels are shown, valve orientation shall be as shown. Where valve hand wheels are not shown, valves shall be oriented to permit easy access to the hand wheels, and to avoid interferences.

I. Unions, strainers, and all other similar in-line devices shall be installed in piping in a manner which allows adequate clearances for maintenance of the device.

3.06 PIPING CORROSION PROTECTION

A. General:

1. See Section 09 90 00, PAINTING, and the Detail Piping Specifications.

B. Buried Piping Accessories:

1. All buried pipe appurtenances made of steel shall have corrosion protection as specified in Section 09 90 00, PAINTING. Flange bolts, nuts, tie rods, and similar items shall be stainless steel or fusion bonded coated. Flexible couplings, grooved couplings, and similar items shall be fusion bonded epoxy coated.

C. Exposed Piping Accessories:

1. Pipe support systems shall be painted the same color and paint system as the supported piping. Stainless steel pipe supports shall not be painted unless directed by Engineer.

D. Carbon Steel Pipe:

1. Exterior Coating for Exposed Galvanized and Mill Type Steel Pipe: Shop prime and finish coats in accordance with Section 09 90 00, PAINTING, System No. 5. The coating system shall be applied prior to insulating.

2. Exterior Protection for Buried, Submerged or Encased Pipe:

a. All submerged or concrete encased carbon steel piping shall be coated with epoxy, and coating shall be as specified in Section 09 90 00, PAINTING, System No. 3 (encased). Coating shall be applied by a qualified coating applicator.
b. All abraded areas of epoxy coatings on carbon steel pipe to be submerged or concrete encased shall be cleaned and repaired to provide a protective covering equal to the original and acceptable to the Engineer.

c. Steel pipe shall not be buried unless provided with appropriate coatings as shown on the Drawings and as specified.

3. Buried Steel Pipe for Hot Air Service: Shall be protected by a shop-applied tape coat system per Section 09 90 00, PAINTING, System No. 8. For touch up and field application, the system shall be applied by hand. The pipe surface shall be solvent cleaned, SSPC-SP 1, and wire brushed, SSPC-SP 3, to remove all dirt and loose rust and mill scale, and immediately primed with the tape manufacturer's recommended primer in accordance with the manufacturer's recommendations. The tape shall be spirally applied to the pipe with a 50 percent overlap minimum after the primer has thoroughly dried. Joints shall be tape wrapped or heat shrink wrapped. Joints shall be completed above grade or a sufficient size hole excavated beneath the couplings or joints to permit joint wrapping without contamination

3.07 PIPE PAINTING AND COLOR CODING

A. Painting, identification, and color coding of piping systems shall be as specified in Section 09 90 00, PAINTING. Paint systems specified shall be applied to piping prior to insulating. Identification and color coding shall also be applied to the exterior covering of insulated piping.

3.08 EXPANSION PROVISIONS

A. All piping support systems shall have adequate provisions for accommodating pipe movement due to thermal expansion and/or terminal point movements. Piping expansion provisions shall be provided as specified hereinafter.

B. Expansion joint details for all piping systems have not been shown unless special details are required. The absence of details on any Drawings shall not relieve the Contactor of the responsibility for providing them throughout the plant. Any modifications to the piping systems which have expansion joint details shown on the Drawings, including the addition of expansion joints where not shown, shall require a review of the piping system indicated. All proposed modifications to the piping systems shown on the Drawings shall be reviewed by the Engineer, prior to construction. The cost of modifying the existing piping system shall be borne by the Contractor.

C. Expansion Provisions For Piping Smaller Than 3 Inches:

1. Expansion provisions for steel piping less than 3-inch nominal diameter shall be provided with piping flexibility using expansion bellows type couplings or piping bends. Maximum spacing of couplings or bends shall be as indicated herein under expansion joint

spacing. Expansion square-bends shall be used in straight piping runs to provide expansion flexibility. Square-bend dimensions shall be as required by the specific application for an allowable piping stress of 12,000 psi. Minimum piping temperature for calculations shall be 40 degrees F. Maximum piping temperature shall be 100 degrees F or the maximum operating temperature indicated in Section 40 02 05, PIPING SCHEDULE, whichever is greater. Piping anchors shall be installed at the midpoint between expansion bends, where more than one expansion bend is required in a straight run of piping.

2. Where the application excludes the use of the piping expansion provisions specified, the Contractor shall provide expansion joints designed for the indicated service and application. The Contractor shall provide details of the proposed installation to the Engineer for review as part of the requirements specified herein for Paragraph SUBMITTALS. Installation shall include two pipe alignment guides on each side of the expansion joint spaced at 4 and 14 pipe diameters from the expansion joint. Provide piping anchors at the limits of all straight runs of piping requiring expansion joints. For straight runs of piping requiring more than one expansion joint, piping anchors shall be installed at the midpoint between piping expansion joint locations.

D. Expansion Joint Spacing (Piping Smaller Than 3 Inches): Unless closer spacing is indicated on the Drawings, the maximum spacing for expansion joints shall be:

Type of Pipe	Max. Run Without Expansion Joint, Loop or Bend (Ft)	Expansion Joint Max. Spacing in Straight Runs Bounded By Expansion Joints (Ft)
Steel (Hot Pipe Service)	30	100
Steel (General Service)	30	100

3.09 TESTING

A. General: The Contractor shall conduct pressure and leakage tests concurrently on all newly installed pipelines in accordance with this specification and AWWA C600 and C605. Furnish all necessary equipment and material and make all taps in the pipe, as required. The Engineer will monitor the tests and all testing and results must meet the satisfaction of the Engineer. Test pressures shall be as specified in Section 40 02 05, PIPING SCHEDULE. New pipelines which are to be connected to existing pipelines shall be tested by isolating the new pipe with grooved end pipe

caps, spectacle blinds, or blind flanges, plugs or other fittings as appropriate for the pipe type.

B. Preparation and Execution: Conduct leakage tests on buried piping after the trench has been adequately backfilled. The Contractor may, if field conditions permit, as determined by the Engineer, partially backfill the trench and leave the joints open for inspection and conduct an initial service leak test. The acceptance test shall not, however, be conducted until all backfilling has been completed. Conduct the tests on exposed piping after the piping has been completely installed, including all supports and anchors. Exposed piping shall have no visible leakage.

C. Pneumatic Leak Tests:

1. Equipment: Contractor shall conduct and furnish the following equipment for the pneumatic tests:

Amount	Description
1	Pneumatic compressor separator-dryer system capable of providing oil-free dry air and equipped with one or more full capacity safety relief valves set at a pressure of not more than 105 percent of the required primary test pressure.
1	Calibrated test gauge.

2. Procedure:

a. Pneumatic testing shall be performed using accurately calibrated instruments and oil-free, dry air. Test shall be performed only after the piping has been completely installed, including all supports, hangers and anchors, and inspected for proper installation. All parts of the piping system shall be subjected to test pressure specified in Section 40 02 05, PIPING SCHEDULE. The Contractor shall recognize the hazards associated with air testing and shall take all necessary precautions to protect test personnel and Owner's operating personnel. All piping to be tested shall be secured to prevent damage to adjacent piping and equipment in the event of a joint failure. Any appurtenant instruments or devices that could be damaged by the test shall be removed from the piping or suitably isolated prior to applying the test. Prior to starting the test, the Contractor shall notify the Engineer.

b. A preliminary pneumatic test not to exceed 25 psig shall be applied to the piping system prior to final leak testing, as a means of locating major leaks. Examination for leakage, detected by soap bubbles, shall be made at all joints and connections. After all visible leaks have been corrected, the pressure in the system shall gradually be increased to not more than ½ of the test pressure, after which the pressure shall be increased in steps of approximately 1/10 of the test pressure until the required test pressure has been reached. The pneumatic test pressure shall be continuously maintained for a minimum time of 10 minutes and for such additional time as may be necessary to conduct a soap bubble examination for leakage. The piping system, exclusive of possible localized instances at pump or valve packing, shall show no evidence of leakage. Any visible leakage or pressure loss shall be corrected at the Contractor's sole expense.

c. Following pneumatic testing, lines which are to carry flammable gases shall be thoroughly purged with nitrogen to assure that no explosive mixtures will be present in the system during the filling process.

D. Initial Service Leak Tests:

1. Equipment: Equipment used for initial service leak testing may be the same as that specified under PNEUMATIC LEAK TESTS hereinbefore, or the pump or compressor connected to the piping system.

2. Procedure: The initial service leak test shall be performed by gradually bringing the piping system up to normal operating pressure and holding it there continuously for a minimum time of 10 minutes. Examination for leakage shall be made at all joints and connections. Soap bubbles shall be used to detect leaks in pneumatically-tested systems. The piping system, exclusive of possible localized instances at pump or valve packing, shall show no visual evidence of weeping or leaking. Any visible leakage or pressure loss shall be corrected at the Contractor's sole expense.

E. Test Records: Records shall be made of each piping system installation during the test. These records shall include:

1. Date of test.

2. Description and identification of piping tested.

3. Test fluid.

4. Test pressure.

5. Remarks, to include such items as:

   a. Leaks (type, location).
   b. Repairs made on leaks.

6. Certification by Contractor and signed acknowledgment by Engineer.

3.10 INTERIM CLEANING

A. Care shall be exercised during fabrication to prevent the accumulation of weld rod, weld spatter, pipe cuttings and filings, gravel, cleaning rags, etc. within piping sections. All piping shall be examined to assure removal of these and other foreign objects prior to assembly. Shop cleaning may employ any conventional commercial cleaning method if it does not corrode, deform, swell, or otherwise alter the physical properties of the material being cleaned.

3.11 FINAL CLEANING

A. Following assembly and testing and prior to final acceptance, all pipelines installed under this section, except chemical gas, air lines, fuel lines, and instrument air lines, shall be flushed with water and all accumulated construction debris and other foreign matter removed. Flushing velocities shall be a minimum of 2.5 feet per second. Cone strainers shall be inserted in the connections to attached equipment and left there until cleaning has been accomplished to the satisfaction of the Engineer. Accumulated debris shall be removed through drains 2-inch and larger or by removing spools and valves. Immediately following drainage of flushed lines, the piping shall be air dried with compressed air.

B. It must be understood that flushing removes only light solids and cannot be relied on to remove heavy materials allowed to get into the pipe during installation. If necessary, the Contractor shall also clean pipelines 2 inches and larger by pigging with an acceptable flexible pig made specifically for this purpose.

C. Chemical gas, air, fuel lines, and instrument air piping shall be blown clean of loose debris with compressed air.

3.12 WALL PIPES AND PIPE SLEEVES

A. Wall pipes and pipe sleeves embedded in concrete walls, floors, and slabs shall be embedded as specified in Section 03 30 00, CONCRETE and as shown. Support all pipes embedded in concrete walls, floors, and slabs with formwork to prevent contact with the reinforcing steel.

3.13 FLEXIBLE JOINTS AT CONCRETE STRUCTURES

A. A flexible joint shall be provided at the face of all footings or other structures. The joint shall be between 1 foot and 3 feet away from the face or edge of the footing, unless specifically shown otherwise on the Drawings.

B. A second flexible joint may be provided within 24 inches of the first joint.

C. Flexible joints may be rubber ring joints, mechanical joints, or flexible couplings, unless shown otherwise on the Drawings.

3.14 PERMISSIBLE DEFLECTION AT JOINTS

A. Wherever it is necessary to deflect pipe from a straight line, either in the vertical or horizontal plane, do not exceed 50 percent of the amount of deflection recommended by the pipe or coupling manufacturer, or as shown on the Drawings.

3.15 SAFETY CONSIDERATIONS

A. No water piping shall be installed immediately over or within a 3-foot plan view clearance of any electrical panel, motor starter, or mechanical mounting panel. Where piping must be located within these zones, install piping inside a PVC conduit or shield the electrical device to prevent direct water access to electrical equipment in the event of a pipe leak, or provide other protection as allowed by the National Electrical Code.

3.16 INSULATION

A. All piping and equipment to be insulated shall be insulated in accordance with manufacturer's instructions including types of insulating cements, lagging adhesives, and weather-proof mastics if different from those specified.

B. All insulation shall be applied over clean, finish painted, and dry surfaces with all joints butted firmly together, but not until piping system has been pressure tested and any leaks corrected. Insulation shall not extend beyond flanges nor cover nameplates or code inspection stamps. Insulation shall run continuous through wall openings, ceiling openings, pipe hangers, pipe supports, and pipe sleeves, unless otherwise noted.

C. Where connection is shown to existing piping, the existing insulation shall be cut back to remove the portion damaged by the piping revisions, and new insulation installed. The joint between the old and new insulation shall be finished as hereinbefore specified.

D. The Insulation Contractor shall furnish precut, sized sections of closed cell rigid insulation with vapor barrier to the Mechanical Contractor to be inserted under piping and centered at each hanger and support location. Provide continuous vapor barrier at all joints between rigid insulation and pipe insulation.

E. Insulate all valve bodies, flanges, and pipe couplings. Provide removable insulation sections on all devices that require access for maintenance of equipment or removal, such as unions, strainer end plates, etc. Do not insulate flexible pipe couplings.

F. Finished appearance of all insulation shall be smooth and continuous. Provide coating of insulating cement where needed to obtain this result. Joints shall be lapped and the integrity of vapor seals maintained in strict accordance with manufacturer's instructions. Staples and screws shall not be used to secure components of systems that are vapor sealed.

G. Care shall be taken to apply the insulation and vapor barrier coating on exterior piping so that it will not be damaged when the prefabricated aluminum fitting covers are applied. The prefabricated aluminum covers shall serve as weatherproof enclosures over fittings. No screws or rivets shall be used in fastening the fitting covers, as they may puncture the vapor seal.

H. Exterior flanges and unions shall have removable prefabricated aluminum covers.

END OF SECTION 40 05 10

SECTION 40 05 10.04
DETAIL PIPING SPECIFICATION:
MILL TYPE STEEL PIPE AND FITTINGS
DIVISION 40 00 00 – PROCESS INTERCONNECTIONS (GENERAL SERVICE)

PART 1 GENERAL

1.01 SECTION INCLUDES

A. Work necessary to furnish and install the mill type steel general service plant piping, complete, and as specified further in Section 40 02 05, PIPING - GENERAL.

1.02 CODE REQUIREMENTS

A. Meet the requirements of the ANSI Codes for Pressure Piping B31.1, Power Piping, and B31.3, Chemical Plant and Petroleum Refinery Piping, hereinafter referred to as the Piping Code.

1.03 SUBMITTALS

A. Welding Procedure Specifications and Qualifications: Prior to the start of work submit the following:

1. List of the welders or welding operators proposed and type of welding for which each individual has been qualified.

2. Procedure Specifications and qualification records of welding procedures for pipe and associated structural welding to be performed under this section, in accordance with Section IX of the ASME Boiler and Pressure Vessel Code.

PART 2 PRODUCTS

2.01 PIPE

A. General: Black carbon steel meeting the requirements of ASTM A53, Grade B seamless or electric resistance welded, except piping 1-1/2-inch and smaller shall be ASTM A106, Grade B.

B. Screwed, Butt-Welded, and Flanged Pipe Wall Thickness:

1. 1-1/4-Inch and Smaller: Schedule 80.

2. 1-1/2-Inch Through 6-Inch: Schedule 40.

3. 8-Inch and Larger: Schedule 30.

2.02 JOINTS

A. Butt-welded, flanged, or screwed, as follows:

1. 2-Inch and Smaller: Screwed.

2. 2-1/2-Inch and Larger: Butt-welded or flanged at valves and equipment, unless otherwise shown.

2.03 FITTINGS

A. 2-Inch and Smaller:

1. Screwed, 150-pound malleable iron, black, ASTM A197 or ASTM A47, with dimensions meeting the requirements of ANSI B16.3.

2. Unions: 300-pound malleable iron, black, ASTM A197 or ASTM A47, with dimensions meeting the requirements of ANSI B16.3, and a brass-to-iron seat.

B. 2-1/2-Inch and Larger:

1. Butt-Welding Type: Carbon steel, to match pipe wall thickness, ASTM A234, Grade WPB, meeting the requirements of ANSI B16.9. All elbows shall be Short Radius, unless otherwise designated. Fitting wall thickness shall match adjoining pipe.

2. Flanged: As required to connect steel piping to fittings and equipment, and as specified in Article FLANGES herein.

2.04 BRANCH CONNECTIONS

A. 2-Inch and Smaller:

1. Screwed, straight, or reducing tees as specified under Article FITTINGS.

2. 2,000- or 3,000-pound WOG forged carbon steel, ASTM A105 Grade II, commercial welding branch fittings with threaded outlet as manufactured by:

a. Bonney Forge Corporation, Mount Union, PA.
b. Allied Piping Products Pa, Inc., Oaks, PA.
c. Or approved equal.

B. 2-1/2-Inch and Larger:

1. Straight or reducing tees, as specified under Article FITTINGS.

2. Standard weight forged steel, ASTM A105, Grade II, commercial welding branch fittings with butt-welding outlet as manufactured by:

   a. Bonney Forge Corporation, Mount Union, PA.
   b. Allied Piping Products Pa, Inc., Oaks, PA.
   c. Or approved equal.
   d. Or fabricate from pipe.

3. Use tee for branch outlet full size of run or one size reduced.

2.05 FLANGES

A. Forged Steel, ASTM A181, Class 60, slip-on or welded neck type, faced and drilled 150-pound, 1/16-inch raised face, ANSI B16.5 Standard, or AWWA C207, Class D hub, faced and drilled 125-pound flat-face, ANSI B16.1 Standard.

B. Welding Neck Flanges: Provide when abutting butt-weld fittings. Welding neck bore shall match pipe inside diameter.

C. Flat Face Flange Mating: Machine off the raised face of steel flange when mating with a cast iron flat faced flange.

2.06 COUPLINGS

A. Screwed Pipe: Malleable iron, ASTM A197 or ASTM A47, with dimensions meeting the requirements of ANSI B16.3.

2.07 BOLTING

A. 150-Pound RF Flanges: Carbon steel, ASTM A307, Grade A hex head bolts and ASTM A563, Grade A hex head nuts.

B. 125-Pound FF AWWA Class D Flanges: Carbon steel, ASTM A307, Grade A hex head bolts and ASTM A563, Grade A hex head nuts.

C. When mating flange on equipment is ductile or cast iron and gasket is flat ring type, provide ASTM A307, Grade B square head bolts and ASTM A563, Grade A heavy hex head nuts.

D. 1/8-inch Undersize Bolting Material For Steel Insulating Flanges: ASTM A193, Grade B7 alloy stud bolts and ASTM A194, Grade 2H carbon steel heavy hex nuts.

2.08 GASKETS

A. Flanged Joints for General Service:

1. 150-Pound RF Flanges: 1/16-inch thick compressed non-asbestos composition flat ring type.

2. 125-Pound FF Flanges: 1/16-inch thick compressed non-asbestos composition full face type.

3. Use full-face type ring when 150-pound flange mates with a 125-pound cast iron flange.

4. **For use with hot air service, gasket must be rated for temperatures up to 250°F**.

5. Manufacturers:

a. Garlock Blue-Gard Style 3000.
b. Johns Mansville Clipper Style 978-C.
c. Or equal.

B. Flanged Joints for Potable and Non-Potable Water Service:

1. 150-Pound RF Flanges: 1/8-inch thick flat ring type, made of synthetic fibers with a rubber binder or PTFE with glass microspheres, Garlock Style 3760-U or Style 3505, or approved equal, meeting the requirements of ANSI B16.21, AWWA C207, and NSF 61.

2. 125-Pound FF Flanges: 1/8-inch thick full-face type, EPDM elastomer with cloth finish, Garlock Style 98206, or approved equal, meeting the requirements of ANSI B16.21, AWWA C207, and NSF 61.

3. Or as required to meet the hot air service temperature requirement.

4. Provide gasket materials free from corrosive alkali or acid ingredients and suitable for use in non-potable and potable water services.

2.09 THREAD LUBRICANT

A. Provide Teflon tape as thread lubricant.

2.10 WELDING ROD AND BARE ELECTRODES

A. Meet the requirements of the welding procedure specifications and qualifications as specified in Article WELDING herein.

PART 3 EXECUTION

3.01 WELDING

A. Piping and Structural Attachments to Piping: In accordance with latest editions of Section IX, ASME Boiler and Pressure Vessel Code and the Piping Code.

B. Welding Procedure Specifications:

1. Qualify all welding procedure specifications prior to fabrication in accordance with the ASME Boiler and Pressure Vessel Code, Section IX and the Piping Code.

2. Identify all welding procedure specifications by number and reference the procedure number on all fabrication Drawings.

3. Submit qualified welding procedure specifications in accordance with Section 01 33 00, SUBMITTALS.

C. Welding and Welding Operators:

1. Qualify all welders and welding operators prior to fabrication in accordance with the ASME Boiler and Pressure Vessel Code, Section IX and the Piping Code.

2. Include qualifications for all welding positions to be employed in the fabrication.

3. Make qualification records available for review by the Engineer and Owner.

D. Materials:

1. Use welding products within the limits recommended by their manufacturers.

2. Keep electrodes, filler wires, and fluxes clean, dry, and properly stored according to manufacturer's recommendations. Do not use electrodes, filler wires, or fluxes that are damp, greasy, or oxidized.

3. Do not use backing rings.

4. Consumable inserts may be used if included in the qualified welding procedure specification. Match the chemistry of the consumable insert with the base metal and weld metal chemistry.

E. Weld Identification:

1. Assign each qualified welder or welding operator an individual identification number or symbol.

2. Permanently mark each pressure weld with the identification of the welder or welding operator who performed the weld. If more than one welder or welding operator welds a joint, each shall apply their identification in a manner to indicate the part of the weld they completed.

F. Procedure:

1. Clean surfaces to be welded free of paint, oil, dirt, scale, oxides, and other material detrimental to welding. Clean in a manner that will not lead to contamination of the weld or adjoining base metal.

2. No welding shall be performed if there is any rain, snow, sleet, or high wind in contact with weld area or if ambient temperature is below 32 degrees F.

3. If ambient temperature is less than 32 degrees F, local preheating to a temperature warm to the hand is required.

4. Tack Welds:

   a. Remove if not made by a qualified welder using the same procedure as for the completed weld.
   b. If not removed, make tack weld with an electrode the same as, or equivalent to, the electrode to be used for first weld pass.
   c. Remove cracked tack welds.

5. Clean each layer of deposited weld metal with a power-driven wire brush, prior to depositing each subsequent layer of weld metal, including final pass.

6. Chip or grind out surface defects which will affect soundness of the weld.

7. Weld Passes:

   a. 6-inch and Larger Pipe: Minimum of three weld passes using the specified covered electrode.
   b. 4-inch and Smaller Pipe: Minimum of a full root and second pass.

8. Welds: Free of cracks, incomplete penetration, weld undercutting, excessive weld reinforcement, porosity, slag inclusions, and other defects in excess of limits prescribed in the Piping Code.

9. Branch Connections: Fit and groove-weld in accordance with details described and shown in the Piping Code.

3.02 FABRICATION

A. End Preparation:

1. Machine shaping of pipe ends is the preferred method.

2. Oxygen or arc cutting is acceptable only if the cut is smooth and true and all slag is removed either by chipping or grinding.

3. Beveled Ends for Butt Welding: Meet the requirements of ANSI B16.25.

B. Cleaning: After completion of shop or field fabrication and after erection, clean all piping inside and outside to remove all loose scale, weld spatter, dirt, loose debris, and foreign material.

C. Alignment and Spacing:

1. Align ends to be joined within commercial tolerances on diameters, wall thicknesses, and out-of-roundness.

2. Root Opening Of Joint: As stated in welding procedure specification.

3.03 EXAMINATION, INSPECTION, AND TESTING

A. Required Examinations:

1. Perform examinations in accordance with the Piping Code. Twenty-five percent of the circumferential butt welds shall be random examined.

2. Perform examinations for every pipe thickness and for each welding procedure, progressively, for all piping covered by this section.

3. Examine at least one of each type and position of weld made by each welder or welding operator.

4. For each weld found to be defective under the acceptance standards or limitations on imperfections contained in the Piping Code, examine two additional welds made by the same welder that produced the defective weld. Such additional examinations are in addition to the minimum required above. Examine, progressively, two additional welds for each tracer examination found to be unsatisfactory.

B. Inspection: Provide access to the Owner and Engineer for inspection of all shop and fieldwork and review of all records of examinations.

C. Pressure Tests:

1. Piping: Test at the pressure listed in Section 40 02 05, PIPING SCHEDULE in accordance with the Piping Code.

2. Piping Pressure Test Procedures: As specified in Section 40 05 10, PIPING - GENERAL.

3.04 SUPPORTS AND HANGERS

A. As specified in Section 40 05 10, PIPING - GENERAL.

3.05 CORROSION PROTECTION

A. As specified in Section 40 05 10, PIPING - GENERAL.

END OF SECTION 40 05 10.04

PART 1 GENERAL

1.01 SECTION INCLUDES

A. Work necessary to furnish and install, complete, the stainless steel plant pipe and fittings specified herein and as specified further in Section 40 05 10, PIPING -GENERAL.

1.02 GENERAL

A. See Section 40 05 10, PIPING - GENERAL for additional requirements.

PART 2 PRODUCTS

2.01 GENERAL SERVICE PIPE AND FITTINGS

A. Pipe: Stainless steel, pickled and passivated, ASTM A778, Type (TP) 304L, "as welded" grade, unless otherwise specified hereinafter.

1. 2-1/2-inch and Smaller: ASTM A312, TP316, Schedule 40S, seamless.

2. 3-Inch through 12-Inch: Schedule 10S.

3. 14-Inch and Larger: Schedule 5S.

B. Joints

1. 2-1/2-Inch and Smaller: Screwed.

2. 3-Inch and Larger: Butt welded or flanged.

C. Fittings

1. 2-1/2-Inch and Smaller: Screwed, stainless steel, rated 1,000 pound CWP, forgings conforming to ASTM A182, Grade F316 or barstock to ASTM A276, Type 316, dimensions conforming to ANSI B16.3, standard for 150-pound SWP malleable iron screwed fittings.

2. 3-Inch and Larger: Butt welding type, stainless steel, pickled and passivated, schedule to match piping, ASTM A774, Type 316L, conforming to MSS SP-43; "as welded" grade; all ells long radius, unless otherwise designated.

D. Branch Connections:

1. 2-1/2-Inch and Smaller: Screwed tees as specified under Article FITTINGS, or 3,000-pound WOG forged stainless steel, ASTM A182, Grade 316L commercial welding branch fittings with threaded outlet, as manufactured by Bonney Forge Corporation, Mount Union, PA; Allied Piping Products Pa. Inc., Oaks, PA; or equal.

2. 3-Inch and Larger: Tees or reducing tees as specified under Article FITTINGS.

E. Flanges:

1. Submerged Below the Overflow Level of Hydraulic Structures and Inside Digesters: Forged stainless steel, ASTM A182, Grade F316L, slip-on type, faced and drilled 150-pound, 1/16-inch raised face, ANSI B16.5 standard.

2. All Other Exposed Applications: Cast steel backing flanges, ASTM A216, Grade WCA, Van Stone type, drilled 125-pound, ANSI B16.1 standard.

F. Stub Ends: Stainless steel, ASTM A240, Type 316L, as welded grade, conforming to MSS-SP43, or flared nipples, schedule to match pipe.

G. Bolting:

1. Submerged Below the Overflow Level of Hydraulic Structures and Inside Digesters: Bolts shall be ASTM F594, Type 316 stainless steel with minimum yield strength of 75,000 psi. Bolts shall have hex heads in accordance with ASME B18.2.1. Nuts shall be ASTM F594, Type 316 stainless steel with hex heads in accordance with ASME B18.2.2.

2. All Other Exposed Applications: Carbon steel, ASTM A307, Grade A hex head bolts and ASTM A563, Grade A hex head nuts.

3. When mating flange on valve, equipment, or adjoining pipe is a dissimilar metal, use ASTM A307, Grade B, square head bolts and ASTM A563, Grade A heavy hex head nuts with insulating flange.

H. Gaskets: Gaskets for flanged joints shall be 1/8-inch thick conforming to applicable parts of ANSI B16.21, AWWA C207, and NSF 61. Gasket material shall be free from corrosive alkali or acid ingredients and suitable for use in sewage or potable waterlines, or **for use with hot air up to 250 degrees F**. Gaskets shall be full-face type, EPDM elastomer with cloth finish, Garlock Style 98206, or approved equal, for 125-pound FF flanges.

Gaskets shall be flat ring type, made of synthetic fibers with a rubber binder or PTFE with glass microspheres, Garlock Style 3760-U or Style 3505, or approved equal, for 150-pound RF flanges, or as needed to provide the required heat rating.

I. Thread Lubricant: Teflon tape.

J. Covered Welding Electrodes: For Shielded Metal Arc Process Type 316L Pipe, AWS 5.4, E 316L.

K. Welding Rod and Bare Electrodes: For Gas Tungsten Arc or Gas Metal Arc Processes, Type 316L Pipe, AWS 5.9, ER 316L.

PART 3 EXECUTION

3.01 WELDING

A. In accordance with latest editions of Section IX, ASME Boiler and Pressure Vessel Code and the American National Standard Code for Pressure Piping, ANSI B31.2 and B31.3, as applicable.

3.02 WELDING PROCEDURE QUALIFICATIONS

A. Furnish Engineer for prior review, procedure specifications and qualification records of welding procedures for all pipe welding to be performed under this section, in accordance with Section IX, Article II of the ASME Boiler and Pressure Vessel Code.

3.03 WELDING PERFORMANCE QUALIFICATIONS

A. All welders and welding operators shall be qualified at the Contractor's sole expense by an ASME-approved testing laboratory before performing any welding under this section. Qualification test shall be in accordance with Section IX, Article III of the ASME Boiler and Pressure Vessel Code. Welders and welding operators shall be qualified for making groove welds in Type 316 and 316L stainless steel pipe in position 6g for each welding process to be used.

B. Prior to the start of the work, Contractor shall submit a list of the welders he proposes using and the type of welding for which each has been qualified.

C. Qualification test may be waived if evidence of prior qualification is deemed suitable by the Engineer. Contractor shall retest any welders at any time Engineer considers the quality of the welder's work substandard. When Engineer requests the retest of a previously qualified welder, the labor costs

for the retest will be at the Owner's expense if the welder successfully passes the test. If the welder fails the retest, all cost shall be at the Contractor's expense.

3.04 IDENTIFICATION OF WELDS

A. Each weld shall be marked with a symbol which identifies the person who made the weld.

3.05 FABRICATION AND INSTALLATION

A. Wrenches, brushes, slings, and other tools used on stainless steel pipe shall be stainless steel or nonferric materials. Do not use mild steel.

B. Weld End Preparation: Pipe edges shall be prepared preferably by machine shaping or cutting with an aluminum oxide blade. Oxygen or arc cutting are acceptable only if the cut is reasonably smooth and true and all slag is removed either by chipping or grinding. Beveled ends for butt welding shall conform to ANSI B16.25.

C. Screwed joints shall be made with fitting threads and pipe threads accurately conforming to the requirements of ANSI B2.1 for standard taper pipe threads. The Contractor shall use clean and sharp dies to provide an accurate thread profile, free of ridges and burrs. Back-welding of joints will not be permitted to remedy joints failing pressure tests. Joints failing the pressure test shall be replaced with a screwed joint which passes the test.

D. Compression type fittings shall be installed in accordance with manufacturer's instructions.

E. Cleaning: Surfaces shall be clean and free of paint, oil, rust, scale, slag, or other material detrimental to welding. Prior to welding, wire brush joints to be welded with stainless steel wire brushes or stainless steel wool. Prevent the destruction of the corrosion resistant passive film on stainless steel piping surfaces. Prevent contact of stainless steel piping surfaces with carbon steel and iron filings from such devices as threading machines, grinding wheels, files and any other contamination source.

F. Alignment and Spacing: Align ends to be joined within existing commercial tolerances on diameters, wall thicknesses, and out-of-roundness. Root opening of the joint shall be as stated in the procedure specification.

G. Procedure:

1. The direct current, reverse polarity, shielded metal arc or gas metal arc processes or direct current, straight polarity, gas tungsten-arc process shall be used for all field welding. Shop fabrication shall be in accordance with the submitted welding procedure qualifications.

2. No welding shall be performed if there is impingement of any rain, snow, sleet, or high wind on the weld area, or if the ambient temperature is below 32 degrees F. If the ambient is less than 32 degrees F, local preheating to a temperature warm to the hand is required.

3. Tack welds shall be thoroughly cleaned to avoid porosity or pinholing in the cover pass and shall be small enough to be readily fused into the succeeding bead.

4. Tack welds, if not made by a qualified welder using the same procedure as for the completed weld, must be completely removed. Tack welds which are removed shall be made with an electrode that is the same as, or equivalent, to, the electrode to be used for the first weld pass. Tack welds which have cracked shall be removed.

5. Each layer of deposited weld metal shall be thoroughly cleaned prior to the deposition of each additional layer of weld metal, including the final pass, with a power-driven stainless steel wire brush. Surface defects which will affect the soundness of weld shall be chipped out or ground out.

6. Welds shall be free of cracks, incomplete penetration, weld undercutting, excessive weld reinforcement, porosity, slag inclusions and other defects in excess of the limits prescribed in Chapter V of ANSI B31.2 and B31.3, as applicable.

7. Branch connections shall be fitted and groove-welded in accordance with the details described and shown in Chapter V of ANSI B31.2 and B31.3 as applicable.

H. Testing: All lines shall be tested at the pressures listed in Section 40 02 05, PIPING SCHEDULE. Test procedures shall be as specified in Section 40 05 10, PIPING - GENERAL.

I. Supports and Hangers:

1. All hanger-pipe contact surfaces shall have a dielectric barrier consisting of neoprene rubber wrapping or plastic coated hangers.

Hangers shall be as specified in Section 40 05 10, PIPING - GENERAL, except spacing shall be as follows:

Pipe Size	Maximum Support/Hanger Span	Minimum Rod Size Single Rod Hanger
1-inch & Smaller	6 feet	1/4-inch
1-1/2-inch through 4-inch	8 feet	3/8-inch
6-inch	8 feet	1/2-inch
8-inch and 10-inch	10 feet	5/8-inch
12-inch	10 feet	3/4-inch

2. The load rating of universal concrete inserts shall not be less than that of the hanger rods they support.

END OF SECTION 40 05 10.09

PART 1 GENERAL

1.01 WORK INCLUDED

A. This section covers the work necessary for furnishing and installing the various manual gate valves, ball valves, globe valves, plug valves, check valves, butterfly valves, and other special valves, complete.

1.02 GENERAL

A. Like items of equipment specified herein shall be the end products of one manufacturer in order to achieve standardization for operation, maintenance, spare parts, and manufacturer's service.

B. See the GENERAL CONDITIONS and Division 01 00 00, GENERAL REQUIREMENTS, which contain information and requirements that apply to the work specified herein and are mandatory for this project.

1.03 SUBMITTALS DURING CONSTRUCTION

A. Submittals during construction shall be made as required in Section 01 33 00, SUBMITTALS in Division 01 00 00, GENERAL REQUIREMENTS. In addition, the following specific information shall be provided:

1. Valve Type Number.

2. Specific details regarding valve construction, valve operators, valve boxes, extension stems, floor-stems, chain wheels, etc., as applicable for each valve type.

3. Submit each valve type as a complete package.

4. If requested by the Engineer, the valve manufacturer shall furnish an affidavit stating the materials options furnished have complied with these and other referenced specifications.

1.04 MANUFACTURERS' SERVICES

A. Manufacturer's services shall be provided in accordance with Section 01 66 40, MANUFACTURERS' SERVICES.

PART 2 PRODUCTS

2.01 GENERAL

A. All valves shall be complete with all necessary operating handwheels, extension stems, floor stands, valve boxes, worm and gear operators,

operating nuts, lever operators, wrenches, and other accessories or appurtenances which are required for the proper completion of the work included under this section. Operators and other accessories shall be sized and furnished by the valve supplier and factory mounted.

B. Valves and operators shall be suitable for the exposure they are subject to: buried, submerged, interior, exterior, as applicable. They shall have all safety features required by OSHA. Unless otherwise shown, valves shall be the same size as the adjoining pipe. Renewable parts including discs, packing, and seats shall be of types recommended by valve manufacturer for intended service, but not of a lower quality than specified herein.

C. All units shall have the name of the manufacturer and the size of the valve cast on the body or bonnet or shown on a permanently attached plate in raised letters.

D. For the purpose of designating the type and grade of valve desired, manufacturers' name is given in the following specifications. Valves of equal quality by other manufacturers will be considered in accordance with the General Conditions.

E. The structure and appurtenant facilities have been designed around the first named manufacturer's equipment. Equipment furnished by all qualified interested manufacturers will be considered, provided that necessary structural and mechanical changes required are submitted in conformance with the requirements of the GENERAL CONDITIONS and Division 1, GENERAL REQUIREMENTS. The Contractor shall bear all costs for necessary changes for a complete and satisfactory installation.

2.02 VALVE TYPES

A. Valve types are specified by number in this Specification. The valves are indicated on the Drawings by valve equipment number call-out and size.

B. Not all valves specified herein may be used on this project. The Contractor shall coordinate all valve types with the Drawings and other specifications in these Contract Documents.

2.03 DESIGN FEATURES

A. Brass and bronze components of valves and appurtenances which have surfaces in contact with the water shall be alloys containing less than 16 percent zinc and 2 percent aluminum.

B. Approved alloys are of the following ASTM designations:

1. A126, Class B, B 61, B 62, B 98 (Alloy UNS No. C65100, C65500, or C66100), B 139 (Alloy UNS No. C51000), B 584 (Alloy UNS No. C90300 or C94700), B 164, B 194, and B 127.

2. Stainless steel Type 316 may be substituted for bronze at the option of the manufacturer and with the approval of the Engineer.

C. All gland bolts and nuts shall be Type 316 stainless steel.

D. Valve ends shall be as specified or as shown on the Drawings, and to suit the adjacent piping.

2.04 VALVE OPERATORS

A. General: All valves shall be equipped with operators. The valve operator types, as specified herein, describe only the general characteristics of the operator. The operator shall be compatible with the valve with which it will be used and shall be of the same manufacturer, or a product that is recommended by the valve manufacturer. The operator shall be sized to operate the valve for the full range of pressures and velocities imposed by the service. All valve operators shall open by turning counterclockwise.

B. Manual Operators:

1. General:

a. Manual handwheel operators shall be provided unless otherwise shown or specified. Ferrous handwheels shall be epoxy-coated or galvanized steel and then field painted the same color as the valve and associated pipeline. Lever operators may be supplied on quarter-turn type valves 6 inches and smaller, if recommended by the manufacturer; however, operator force shall not exceed 80 pounds under any operating condition, including initial breakaway.

b. When the maximum force required to operate a valve under full operating head exceeds 80 pounds, gear reduction operators shall be provided. Gear operators shall be totally enclosed and lubricated.

c. On quarter-turn valves, the valve operators shall be of the self-locking type to prevent the disc or plug from creeping and shall be provided with position indicators to show the position of the valve disc or plug. Operators of the worm and gear type shall have self-locking worm gears, one-piece design, of cast or ductile iron gear material, accurately machine cut. The worm shall be hardened alloy steel, with thread ground and polished.

d. Operators of the geared traveling nut type shall have threaded steel reach rods with an internally threaded bronze or ductile iron nut.

2. Exposed Operators:

a. Exposed operators shall be furnished with chain wheel operators (CWO), geared operators (GO), extension stems, floor stands, and other elements as shown on the Drawings or as required to permit operation from the normal operating level.

b. Lever type operators shall have some means of being fixed in any given position to prevent accidental movement; shall be of rugged, noncorrosive construction; and shall be fully compatible with the valve.

3. Unless specified otherwise hereinafter or shown otherwise on the Drawings, exposed operators shall be of the type listed below:

Type of Valve	Size	Operator
Ball	All Sizes	Lever
Butterfly	All Sizes, Air	Handwheel

2.05 ACCESSORIES

A. Tagging: Each valve operator shall be provided with a 1-1/2-inch minimum diameter heavy brass or stainless steel tag. Each tag shall bear the valve number shown on the Drawings. The tags shall be attached to the operator with key rings so that ring and tag cannot be removed. The numbers and letters shall be of block type, with 1/4-inch high numbers and letters stamped thereon.

2.06 APPURTENANCES

A. Valve Boxes for Buried Valves: Valve boxes shall be Buffalo two-piece sliding (slip) type, cast iron, with 5-1/4-inch minimum inside diameter shaft of appropriate length for the installation. The word SEWER or WATER (as appropriate) shall be cast into the top of the lid. Extension pieces, if required, shall be the manufacturer's standard type. Units shall be Tyler Union No. 29U, Bingham and Taylor Figure No. 4908, Proselect Series PSB461A, or equal. All units shall be complete with all necessary bases and accessories. Valve boxes shall be epoxy coated per System No. 3 in Section 09 90 00, PAINTING.

2.07 BALL VALVES

A. V307: Ball valves 3 inches and smaller shall have Type 316 stainless steel bodies with Type 316 stainless steel balls. Valves shall be 2-piece, full port type with threaded ends, rated 300-pound WOG minimum. Seat, body seal, and stem packing shall be reinforced PTFE. Valves shall have lever operators. Valves shall be Watts Series S-FBV-1, KF Contromatics Series 8200, Bray Flow-Tek Model S80, or equal.

2.08 BUTTERFLY VALVES

A. General: Butterfly valves specified as AWWA C504 shall be in full compliance with AWWA C504 and the following requirements:

1. Valves shall be suitable for partially open operations and for very infrequent operation after extended periods of inactivity.

2. Elastomer seats that are bonded or vulcanized to the body shall have the adhesive integrity of the bond between seat and body assured by sample testing with a minimum 75-pound pull in accordance with ASTM D429, Method B.

3. Inside diameter at seat shall not be less than the inside diameter of the connecting pipe by more than 1 inch.

4. Valves shall be bubble-tight with rated pressure applied from either side of the valve disc.

5. There shall be no travel stops for the disc on the interior of the body.

6. Shaft seals shall be self-adjusting split-V type.

7. Thrust bearing surfaces of metal-to-metal shall not be exposed in the flowstream of the valve.

8. An affidavit shall be furnished from the manufacturer certifying that the valves are in full compliance with AWWA C504.

B. V530: Lugged wafer butterfly valves for low pressure process air service, 2 inches to 24 inches, shall be thin-profile, lugged wafer style. They shall have cast iron or ductile iron bodies; Type 316 stainless steel or Nylon 11 coated ductile iron disc; Type 416, 420, or 316 stainless steel stem; EPDM replaceable resilient seats with molded in or tongue and groove O-rings on the flange contact face; non-disc mounted; suitable for 250 degrees F temperature; and self-adjusting packing suitable for 250 degree F service. Valves shall be bubble-tight at 150 psi differential pressure and shall be suitable for installation between ANSI 125- and 150-pound flanges. Valves

shall be Bray Controls Series 31, DeZurik BOS-CL, Henry Pratt Industrial BF Series, or equal, with manual worm gear handwheel operator unless shown otherwise.

C. V531: Buried butterfly valves for low pressure process air service, 22 inches and larger, shall be double-flanged, short body type, with enclosed gear operators. They shall have cast iron or ductile iron bodies; Type 316 stainless steel or Nylon 11 coated ductile iron disc; Type 416, 420, or 316 stainless steel stem; EPDM replaceable resilient seats with molded in or tongue and groove O-rings on the flange contact face; non-disc mounted; suitable for 250 degrees F temperature; and self-adjusting packing suitable for 250 degree F service. Valves shall be bubble-tight at 150 psi differential pressure and shall be suitable for installation between ANSI 125- and 150-pound flanges. A valve position indicator shall be furnished for installation in each valve box. The indicator shall be hermetically sealed for installation inside a cast iron valve box and shall show valve disc position, direction of rotation, and number of turns from fully opened to fully closed. This indicator shall be provided by the valve manufacturer, complete. Valves shall be Bray Controls Series 35, or equal.

D. B534: Wafer butterfly valves for low pressure process air service, 2 inches to 20 inches, shall be thin-profile, wafer style. They shall have cast iron or ductile iron bodies; Type 316 stainless steel or Nylon 11 coated ductile iron disc; Type 416, 420, or 316 stainless steel stem; EPDM replaceable resilient seats with molded in or tongue and groove O-rings on the flange contact face; non-disc mounted; suitable for 250 degrees F temperature; and self-adjusting packing suitable for 250 degree F service. Valves shall be bubble-tight at 150 psi differential pressure and shall be suitable for installation between ANSI 125- and 150-pound flanges. Valves shall be Bray Controls Series 30, DeZurik BOS-US, Henry Pratt Industrial BF Series, or equal, with manual worm gear handwheel operator unless shown otherwise.

2.09 BOLTS, GASKETS, GLANDS, NUTS, AND SOLVENT CEMENTS

A. Bolts, gaskets, glands, nuts, and miscellaneous accessories required to install all manual valves are to be furnished as specified in Section 40 05 10, PIPING - GENERAL.

B. Bolts and nuts for flanged connections in buried or submerged services shall be Type 316 stainless steel, with American Standard regular hexagonal dimensions. Bolts for flanged connections in exposed services shall be galvanized steel with American Standard regular unfinished square or hex heads. Nuts in exposed applications shall be galvanized steel with American Standard regular hexagonal dimensions.

C. Gaskets for connections in chemical services shall be compatible with the chemicals as recommended by the manufacturer and as approved by the Engineer. Gaskets for flanged connections in all other services shall be 1/8-inch thick cloth inserted rubber suitable for sewage or potable water services. Gaskets shall extend from the inside diameter of the flange to at least the inside edge of the bolt holes (ring gaskets) for raised face flanges, or they shall extend beyond the bolt circle to the outside edge of the flange (full face gaskets for 125 pound flat face flanges). Bolt holes shall be factory punched through full face gaskets. Use of split or segmented gaskets is not acceptable.

D. Solvent cement and primers for solvent weld connections in chemical services shall be compatible with the chemicals as recommended by the manufacturer and as approved by the Engineer.

PART 3 EXECUTION

3.01 GENERAL

A. Before installation, carefully clean valves of all foreign material, adjust stuffing boxes, and inspect valves in open and closed positions. Install valves in accordance with the applicable portions of these Specifications. Some valves require special orientation, see the Drawings. Unless otherwise indicated, install valves with the stem vertical. Mount horizontal valves in such a manner that adequate clearance is provided for operation. Installation practices shall conform to manufacturer's recommendations.

B. Valves shall be tested at the same time that the adjacent pipeline is tested. Joints shall be watertight at test pressures before acceptance. The Contractor will be held liable for any damage caused by the testing.

C. Thoroughly clean threads of screwed joints by wire brushing, swabbing, or other approved methods. Apply joint compound or Teflon tape to threads prior to making joints. Joints shall be watertight at test pressures before acceptance.

D. Bolt holes of flanged valves shall straddle the vertical centerline of the pipe run. Prior to installing flanged valves, the flange faces shall be thoroughly cleaned. After cleaning, insert gasket and bolts, and tighten the nuts progressively and uniformly. If flanges leak under pressure, loosen or remove the nuts and bolts, reseat or replace the gasket, retighten and/or reinstall the nuts and bolts, and retest the joints. Joints shall be watertight at test pressures before acceptance.

3.02 EXPOSED VALVES

A. Generally, unless otherwise indicated on the Drawings, all valves installed in horizontal runs of pipe having centerline elevations 4 feet 6 inches or less above the finish floor shall be installed with their operating stems vertical. Valves installed in horizontal runs of pipe having centerline elevations between 4 feet 6 inches and 6 feet 9 inches above the finish floor shall be installed with their operating stems horizontal. If adjacent piping prohibits this, the stems and operating handwheel shall be installed above the valve horizontal centerline as close to horizontal as possible. Valves installed in vertical runs of pipe shall have their operating stems orientated to facilitate the most practicable operation.

B. Teflon tape or joint compound shall be applied to the male end of threaded joints. Tape or compound shall be used only on metal pipe or fittings. Valves shall be installed with the stem plumb and vertical.

3.03 ISOLATION VALVES

A. A line size ball valve and union shall be installed upstream of each solenoid valve, in-line flow switch, or other in-line electrical device, excluding magnetic flowmeters, for isolation during maintenance.

3.04 ACCESS DOORS

A. Location of valves shall be as required to provide accessibility for control and maintenance. Furnish access doors in finished walls and plaster ceilings where necessary for valve access.

3.05 ANCHOR BOLTS

A. Anchor bolts for floor stands, stem guides, etc. shall be in accordance with this specification and Section 05 50 00, MISCELLANEOUS METAL ITEMS.

3.06 CERTIFICATION

A. If requested by the Engineer, the valve manufacturer shall furnish an affidavit stating the materials options furnished has complied with these and other referenced specifications.

END OF SECTION 40 05 53

PART 1 GENERAL

1.01 DESCRIPTION OF WORK

A. This section covers all materials and work necessary for furnishing and installing the Process Instrumentation and Control System (PICS).

B. Major constituents of this system include, but are not limited to, all materials, equipment, and work required to implement a complete and operational system of instrumentation and controls. The system shall include primary elements for process variable measurements, analog display and control elements, discrete display and control elements, programmable logic controllers, panel enclosures, and other facilities as specified herein and on the Project Drawings.

C. Division 26 Specifications outline the installation requirements for 120 and/or 480 VAC power to those items identified on the Drawings. Division 40 Specifications outline provisions and installation of all signal and control wiring. Arrangements shall be made by PICS Contractor with Electrical Contractor to install any required 120-volt signal and control wiring and conduits within the scope of the work described herein.

D. Project description: The controls and instrumentation specified herein and on the Drawings shall provide monitoring and communication for the following:

1. Aeration Basin RTU-AB1/3:

    a. Aeration basins 1 and 3 airflow and blower control and communication
    b. Aeration basins 1 and 3 instrumentation
    c. LCP-AB1 and LCP-AB3 communication
    d. Clarifiers 2, 3, and future 4 communication

2. Digester Basin RTU-DB:

    a. Digester blower and instrumentation control and communication

3. Instrumentation and control components marked with a diamond on the drawings are in the PICS contractor’s scope.

1.02 RELATED WORK SPECIFIED IN OTHER SECTIONS

A. All the work executed under this section shall meet the requirements of Division 1, GENERAL REQUIREMENTS sections of this specification as if fully stated herein.

B. Section 01 33 00 – SUBMITTALS

C. Section 01 66 00 – PRODUCT SHIPMENT, HANDLING, STORAGE, AND PROTECTION

D. Section 01 66 40 – MANUFACTURER'S SERVICES

E. Section 01 77 00 – CONTRACT CLOSEOUT

F. Section 40 60 10.01, PICS: LOOP DESCRIPTIONS

G. Section 40 60 10.02, PICS: EQUIPMENT.

H. All electrical work executed under this section shall meet the requirements of Division 26, ELECTRICAL.

I. P&ID Drawings

1.03 DEFINITIONS

A. Abbreviations:

1. HMI: Human-Machine Interface
2. PICS: Process Instrumentation and Control System
3. MCC: Motor Control Center
4. OIT: Operator Interface Terminal
5. P&ID: Process and Instrumentation Diagram
6. PAT: Performance Acceptance Test
7. PDF: Portable Design Format
8. PLC: Programmable Logic Controller
9. RTU: Remote Terminal Unit
10. LCP: Local Control Panel
11. MSB: Main Switch Board
12. SCADA: Supervisory Control And Data Acquisition
13. AB: Aeration Basin
14. DB: Digester Basin

B. SCADA System: For this project SCADA System refers to the existing Plant PLC and the computer running the Human Machine Interface (HMI).

C. Rising/Falling: Terms used to define actions of discrete devices about their set points.

1. Rising: Contacts close when an increasing process variable rises through set point.
2. Falling: Contacts close when a decreasing process variable falls through set point.

D. PICS Subcontractor/Integrator: A single firm, under direct subcontract and direction of the Contractor, which shall assume complete responsibility for engineering and furnishing, technically advising on, and certifying the correctness of, installation, making final connections to, adjusting, documenting, testing, and starting-up the complete PICS System. To ensure adequate service and support for WRP operation, the PICS Subcontractor shall be able to demonstrate 5 years of prior experience installing industrial control systems of similar size and scope and be a licensed contractor in the State of Arizona. The PICS Subcontractor will also be required to maintain an office in Arizona, staffed by a qualified PICS engineer or technician.

E. Electrical Subcontractor: The Division 26 Subcontractor, under direct subcontract and direction of the Contractor and distinct from the PICS Subcontractor, shall provide all additional materials and work necessary to supplement the materials and work provided by the PICS Subcontractor, and thereby satisfy all requirements that are within the scope of this section.

F. Contractor: The general Contractor shall be directly responsible for all work by the PICS and Electrical Subcontractors.

1.04 RESPONSIBILITY FOR COMPLETE SYSTEM:

A. The PICS Contractor shall be ultimately responsible and shall provide for the supply, installation, startup, and documentation of a complete, coordinated system which shall be capable of performing the specified functions.

B. The PICS Subcontractor or Electrical Subcontractor (for connections 120 volt and higher) shall make all final power and signal connections, both pneumatic and electric, to all elements provided under this section and provided under other sections. For all elements provided under this section, and all elements interfaced by the instrumentation and control system, the PICS Subcontractor shall verify and certify by written notice to the Engineer, correctness of final signal connections and correctness of adjustment.

C. The PICS Contractor shall obtain the required information on those primary elements and other control equipment or devices that are required to be interfaced with but that are not provided under this section.

D. Contractor and PICS Subcontractor shall coordinate with the Owner's SCADA Systems Administrator on all programming, quality assurance, integration of existing PLC/HMI to new equipment, loop checks, scaling of field devices, and start up and training.

E. Work under this section shall be coordinated with the process, mechanical, and electrical work to ensure that:

1. All instruments, wiring, and other components to be provided under this section are properly installed and interfaced with other system components.
2. The proper type, size, and number of control wires with conduits are provided and installed.
3. Proper electric power circuits are provided for all components and systems.
4. With the exception of low voltage control cables (less than 120 volts), all conductors, voltage control cables, and conduits are provided and installed under Section 26, ELECTRICAL.
5. All control and signal wiring external to the control panels shall conform to the requirements of Division 26, ELECTRICAL.

F. The PICS Contractor shall provide the system application hardware and software.

G. All initial PLC and HMI programming/configuration is to be done by the PICS. Owner to provide the plant's Allen Bradley RSLogix 5000 PLC program as an example which includes the AOI blocks needed for programming. Owner will also provide the plant's Wonderware application to include HMI faceplates and screen examples. Owner's SCADA Systems Administrator will complete final programming for the new system prior to start up.

H. The PICS Contractor shall be responsible for demonstrating that the RTU hardware and software provided as part of this Contract shall reliably perform as designed. This shall include the following startup responsibilities:

1. Demonstrate that the RTU can read all analog and discrete inputs and can operate all analog and discrete outputs.
2. Demonstrate that the RTU functions properly and can communicate correctly with all installed devices and the autodialer.
3. Verify scaling of all field devices and make adjustments to the scaling as required.
4. Provide a complete backup system on a thumb drive. Leave the thumb drive in the panel.

1.05 SUBMITTALS

A. Provide submittals in accordance with the requirements of Section 01 33 00, SUBMITTALS in Division 01, GENERAL REQUIREMENTS.

B. Before any components are fabricated, and/or integrated into assemblies, or shipped to the site, furnish to the Engineer, and receive their review of full details, shop drawings, catalog cuts, and such other descriptive matter and documentation as may be required to fully describe the equipment and options proposed and to demonstrate its conformity to these Specifications. Catalog information shall be submitted for all equipment, regardless of whether or not it is of the same manufacturer as that listed in the Specifications.

C. Construction Sequencing Plan: Since this project involves transitioning from existing to new RTUs, construction sequencing must be planned carefully. Contractor and PICS contractor shall submit a plan outlining how services to the aeration basins will be maintained at all times.

D. Testing Procedure Submittal: Submit a description of the test procedure proposed to complete the specified Performance Acceptance Test (PAT), including an example of the proposed test forms used to document the testing.

E. For additional submittal information see Section 40 60 10.03, PICS: EQUIPMENT.

1.06 DOCUMENTATION

A. This documentation shall include Operating and Maintenance manuals and Record Drawings as described in Section 01 77 00, CONTRACT CLOSEOUT.

B. Documentation shall include results of all testing performed as specified herein and in Section 26 00 10, GENERAL ELECTRICAL REQUIREMENTS.

C. Record Drawings - Provide record drawings in accordance with Section 01 77 00, CONTRACT CLOSEOUT and the following:

1. Process and Instrumentation (Loop) Diagrams. These P&ID's shall be in the same format and style as those provided in these Contract Documents.
2. Interconnecting Wiring Diagrams. Diagrams shall show all equipment (panels, field elements, etc.) and all terminations provided under this section. Wiring diagrams shall clearly show all terminal block number designations and wire numbers. Diagrams, device designations, and symbols shall be in accordance with NEMA ICS 1.
3. Hardware and Software copies of all PLC programs.

D. Provide one set of reproducible record drawings for the following submittal documents:

1. Panel Elementary Diagrams
2. Interconnecting Wiring Diagrams
3. Loop Diagrams

1.07 SEQUENCING AND SCHEDULING

A. Note that aeration to the aeration basins must be maintained to provide continuous treatment. Contractor is responsible for sequencing activities such that blower downtimes are minimized or avoided.

B. Activity Completion: The following is a list of key activities and their completion criteria:

1. Shop Drawings and Sequencing Plan: Reviewed and approved.
2. Quality Control Submittals: Reviewed and accepted.
3. Hardware Delivery: Hardware delivered to site and inventoried.
4. PAT: Completed and required test documentation accepted.

C. PICS Substantial Completion: When Engineer issues Certificate of Substantial Completion.

1. Prerequisites:

a. All PICS Submittals and documentation have been submitted, reviewed, and approved.
b. PICS Contractor has successfully completed PAT.
c. All spares, expendables, and test equipment have been delivered to Owner.

D. PICS Acceptance: When Engineer issues a written notice of Final Payment and Acceptance.

1. Prerequisites:

a. Certificate of Substantial Completion.
b. The complete system of instrumentation and controls has successfully completed all testing requirements cited herein.
c. The System shall operate error free for the period of 7 days.
d. Owner's staff training has been completed.
e. Final revisions to O&M manuals accepted.

E. Prerequisite Activities and Lead Times: Do not start the following key Project activities until the prerequisite activities and lead times listed below have been completed and satisfied:

Key Activity	Prerequisites and Lead Times
Submittal reviews by Engineer	Engineer acceptance of submittal breakdown and schedule
Hardware purchasing, fabrication, and assembly	Approved Submittal reviews by Engineer.
Shipment	Completion and approval of PICS Shop Drawing Submittals and preliminary O&M manuals.
PAT	PICS Startup and PAT procedures completed; notice 2 weeks prior to start.

F. See Section 01 14 16, COORDINATION AND SITE CONDITIONS, for other key construction sequencing and scheduling provisions.

1.08 MANUFACTURERS' SERVICES

A. Manufacturer's services shall be provided in accordance with Section 01 66 40, MANUFACTURERS' SERVICES.

1.09 OPERATION AND MAINTENANCE MANUALS

A. Operation and Maintenance Manuals and Maintenance Summary Sheets for the equipment specified herein shall be furnished as specified in Section 01 77 00, CONTRACT CLOSEOUT in Division 01 00 00, GENERAL REQUIREMENTS.

1.10 WARRANTY

A. Materials, equipment, and workmanship shall be guaranteed for one year from the date of Substantial Completion in accordance with provisions of these Contract Documents.

PART 2 PRODUCTS

2.01 EQUIPMENT

A. Loop descriptions and I/O tables are included in Section 40 60 10.02, PICS: LOOP DESCRIPTIONS.

B. The Process Instrumentation and Control System equipment is specified in Section 40 60 10.03, PICS: EQUIPMENT.

PART 3 EXECUTION

3.01 GENERAL

A. See Section 40 60 10.03, PICS: EQUIPMENT, for specific equipment handling, storage, and installation instructions.

3.02 TESTING

A. As a minimum, the testing shall include the following:

1. Unwitnessed factory test
2. Operational Readiness test
3. Performance Acceptance Tests (PAT)

B. Unwitnessed Factory Test:

1. The instrumentation and control elements shall be inspected and tested at the factory to ensure that they are fully operational and ready for demonstration testing.
2. All panels, consoles and assemblies of the instrumentation and control systems shall be inspected and tested to verify that they are in conformance with related submittals and these Specifications.
3. The entire system, except for primary elements shall be interconnected and tested to ensure that panel wiring is correct, it is communicating with proper addressing, and is fully operational. Outputs to and inputs shall be simulated.
4. All tests shall be itemized and the results documented. Documentation shall be submitted to the Engineer for review.

C. Operational Readiness Tests:

1. Prior to startup, the entire installed system shall be certified (inspected, tested and documented) that it is ready for operation. These inspections and tests shall include Loop/Component inspections and tests and a repeat of portions of the factory tests.
2. The entire system shall be checked for proper installation, calibrated and adjusted on a loop by loop and component by component basis to ensure that it is in conformance with related submittals and these Specifications.
3. The Loop/Component inspections and tests shall be implemented using Engineer approved forms and checklists.

D. Performance Acceptance Test:

1. Witnessed, Performance Acceptance Test (PAT) shall be performed on the complete system of Instrumentation and Controls.

2. Each function shall be demonstrated to the satisfaction of the Engineer on a loop-by-loop and component by component basis.
3. The testing program shall be conducted in accordance with prior approved procedures, and shall be witnessed and signed off by both the Contractor and the Engineer upon satisfactory completion.
4. The Contractor shall notify the Engineer, in writing, at least 2 weeks prior to the date of the Performance Acceptance Test.

E. All special testing materials and equipment shall be provided. Where it is not practical to test with real process variables, provide suitable means of simulation. These simulation techniques shall be subject to the approval of the Engineer.

F. The testing requirements of Section 26 00 10, BASIC ELECTRICAL REQUIREMENTS, of these specifications shall apply in addition to testing described herein.

G. Coordinate all testing with other associated subcontractors.

H. Contractor shall notify Engineer a minimum of 2 weeks prior to the date of the PAT.

3.03 TRAINING

A. The PICS Contractor shall provide, at the jobsite, one 8-hour day of training for the Owner's personnel in the operation and maintenance of the Process Instrumentation and Control System.

3.04 INSPECTIONS

A. All materials, equipment, and workmanship shall be subject to inspection at any time by the Engineer or Owner. Correct any work, materials, or equipment not in accordance with these Contract Documents or found to be deficient or defective at no additional cost to the Owner.

END OF SECTION 40 60 10

(This page intentionally left blank)

PART 1 GENERAL

1.01 DESCRIPTION OF WORK

A. This section includes the loop descriptions for the Process Instrumentation and Control System.

1.02 SUBMITTALS

A. Provide submittals in accordance with requirements in Section 40 60 10, PROCESS INSTRUMENTATION AND CONTROL SYSTEM – GENERAL.

1.03 RELATED SECTIONS

A. Section 40 60 10, PROCESS INSTRUMENTATION AND CONTROL SYSTEM (PICS): GENERAL.

B. Section 40 60 10.02, PICS: EQUIPMENT.

C. All electrical work executed under this section shall meet the requirements of Division 26 – ELECTRICAL.

D. Section 46 05 50, 46 05 50, INSTALLATION OF OWNER FURNISHED SCREENING SYSTEM.

1.04 AERATION BASIN REMOTE TERMINAL UNIT, RTU-AB1/3

A. Only loop descriptions for control functions provided by plant SCADA, RTU-AB1/3, and RTU-DB are included here. Communication and control functions for Aeration Basin 2 are handled by RTU-AB2 supplied as part of the Aeration Basin 2 project. RTU-AB1/3 size and programming must consider monitoring and control of two aeration basins and up to three clarifiers.

1.05 LOOP DESCRIPTIONS FORMAT

A. The loop descriptions specify the functional performance of the loops and include a description of the functions of interlocks and control schemes.

B. PICS Contractor shall provide RTU-AB1/3 and RTU-DB, relay logic, software and hardware as necessary to implement the required functions.

C. The major components to be provided for each loop are listed in a table for each loop. Expanded information for these components, as well as panel

schedule and calibration information are listed in Section 40 60 10.02, PICS: EQUIPMENT.

D. Tag Numbers:

1. Complete tag numbers used for SCADA programming will be provided by the Owner. Where numbers are provided, they differentiate between different aeration basins. Multiple units are indicated by number of units in parenthesis.
2. In this specification section and on the Process Instrumentation Diagram Drawings, ISA element designations are used to identify elements.

1.06 AERATION BASIN: AERATION CONTROL LOOP (RTU-AB1/3)

A. Equipment and Instrumentation:

1. Black text indicates equipment and instrumentation to be supplied by the PICS contractor as part of the Blower Buildings project.
2. Grey text indicates equipment and instrumentation that is existing, supplied by a manufacturer, supplied by Division 16, or will be supplied under a separate project. Known projects are listed.

TAG NUMBER	DESCRIPTION
LCP-AB1 LCP-AB3	AB 1 Local Control Panel (AB1 Rehab project) AB 2 Local Control Panel
BIP-AB1 (future) BIP-AB3 (future)	AB1 bioreactor instrument panel (AB1 Rehab project) AB1 bioreactor instrument panel
FE/FIT-1 FE/FIT-2 FE/FIT-3 (future)	AB1 thermal mass air flow meter AB2 thermal mass air flow meter AB3 thermal mass air flow meter
PI (3) (future) PI (1) (future)	Blower discharge pressure gauges Blower discharge pressure gauge
FCV-OX1 (3) (future) FCV-OX3 (3) (future)	AB1 air control valves to each aerated zone (AB1 Rehab project) AB3 air control valves to each aerated zone
FE/FIT-OX1 (3) (future) FE/FIT-OX3 (3) (future)	AB1 thermal mass air flow meter to each aerated zone AB3 thermal mass air flow meter to each aerated zone
AIT-AB1 (future) AIT-AB3 (future)	AB1 instrument controller (AB1 Rehab project) AB3 instrument controller
AE-OX1 (4) (future) AE-OX3 (4) (future)	AB1 DO probe in each aerated zone (AB1 Rehab project) AB3 DO probe in each aerated zone

B. Aeration System Summary: Each aeration basin train will be controlled as follows:

1. Dedicated header piping will convey the air to the three aerated zones. The header piping will be equipped with actuated butterfly valves to control air flow to each zone.
2. Instrumentation will consist of one dissolved oxygen (DO) meter in each of the three aerated zones, air flow meters on each dedicated header pipe, and the discharge pressure gauges associated with the blowers. DO measurement and feedback from the air flow meters will be used to control the blower VFDs and the header pipe valves to achieve the desired oxygen concentrations in the aerated zones.

C. Aeration Control Narrative:

1. Air flow control will be based on DO levels in the aerated zones. Each zone will have an operator adjustable DO set point. Depending on influent flow and load, for any given setpoint there is a corresponding air flow that should be delivered to the respective cell to achieve the desired dissolved oxygen concentration. The DO probes will report DO levels from each aerobic cell to plant SCADA, which will compare the measured levels to the desired set points. Based on the discrepancy between the set points and the measured levels, if any, a new desired air flow will be determined by plant SCADA for the individual cells. Desired air flow for the individual zones will be summed to determine the total air flow for all aerated zones in all the treatment trains in operation. Plant SCADA will select the number of blowers and ramp the blower VFDs up or down to deliver the desired air flow to the bioreactors. Feedback from the air flow meter in the blower discharge piping will be used to fine-tune VFD settings to achieve the desired air flow. Communication for blower speed will be communicated by existing RTU-AB2.
2. Plant SCADA receives air flow signals from the drop leg air flow meters, compares the desired air flow for each cell to the actual flow, and adjusts the air flow control valves for each cell accordingly. For example, if the desired flow is lower than the measured flow, air flow control valves will be closed incrementally until the measured air flow matches the desired air flow. Blower air flow will be adjusted to match. A small delay between blower speed adjustment and valve adjustment will minimize over and under compensation at the air flow control valves.
3. Automatic control for each aeration valve shall be as follows:
   The operator will enter the desired DO set point. Based on the deviation of the measured DO level in the aerobic cell from the set point, plant SCADA will change the desired air flow rate for that cell. The change in the desired air flow rate shall be determined during commissioning. However, the system integrator shall allow for a minimum of 6 DO ranges (i.e. dead bands). Plant SCADA shall

maintain that flow rate for a certain period of time as determined by the aerobic cell “response time” before another adjustment to the flow rate is made based on the DO reading. The ”response time”, together with DO dead band and flow increment (positive or negative) value will be determined during commissioning and will be adjustable by the operator. Also, there will be a single PID loop for each aerobic cell and the associated air flow control valve to determine the desired air flow.

4. The following lists DO set points for each aerated zone and corresponding air flows. These air flows are starting points to be used for system startup and if a train is brought back into service after shutdown for major maintenance. After startup, these air flows will be automatically adjusted based on the control strategy described above.

    a. Zone OX2-1: 1.8 mg/L, 1,600 scfm
    b. Zone OX2-2: 1.3 mg/L, 700 scfm
    c. Zone OX2-3: 0.8 mg/L, 400 scfm

D. Plant SCADA Monitoring and Control Functions: Plant SCADA shall have but not be limited to the below-listed functions for control of aeration. Additional monitoring may be provided and desired items selected by plant staff:

1. DO set point for each aerobic zone (operator adjustable)
2. Desired air flow rate calculation (PID loop) with operator adjustable deadbands, response time, and flow adjustment increment.
3. Measured DO value for each DO probe.
4. FAIL for each probe
5. Measured air flow rate for each aerobic zone (for all aeration basins in service)
6. Calculated total air flow for each aeration basin (sum of individual cells)
7. Calculated or measured total system air flow (sum of airflow for all aeration basins in service)
8. Measured air flow rate for each aeration basin as measured by thermal mass air flow meters to be located in the new Blower Building.
9. Air flow control valve position indication (each unit)
10. Air flow control valve position control command (each unit)
11. Air flow control valve actuator general FAIL (each unit)
12. Air flow control valve loss of air FAIL (each unit)
13. Air flow control valve actuator communication FAIL (each unit)

1.07 AERATION BASIN: MIXER CONTROL LOOP (RTU-AB1/3)

A. Equipment and Instrumentation:

1. Grey text indicates equipment and instrumentation that will be supplied by a manufacturer and/or under a separate project. Known projects are listed.

TAG NUMBER	DESCRIPTION
M-SX1 (4) (future) M-SX3 (4) (future)	AB1 mixers (AB1 Rehab project) AB3 mixers

B. Mixer Control Narrative: The mixers will run continuously at constant speed and are only turned off if they require service or if the aeration basin is taken out of service. The mixers will be powered from the manufacturer-provided Aeration Basin 1 or 3 Local Control Panels, LCP-AB2 or LCP-AB3, and have local disconnects installed on the aeration basin.

C. Plant SCADA Monitoring and Control Functions: Plant SCADA will not control the mixers but will display status signals and allow for alarm acknowledgement. At a minimum, the following signals shall be displayed:

1. Mixer elapsed time (each unit)
2. Mixer RUN indication (each unit)
3. Mixer Communication FAIL (each unit)
4. Mixer FAIL indication (each unit)

a. Seal FAIL
b. High temp FAIL
c. High Amp draw indication (each unit)

D. Manufacturer Local Control Panel Functions: The manufacturer panels will contain the motor starters and will keep the mixers running continuously unless manually shut off. The panels shall send the above signals to RTU-AB1/3 via Ethernet communication protocol.

1.08 AERATION BASIN: MLR PUMP CONTROL LOOP (RTU-AB1/3)

A. Equipment and Instrumentation:

TAG NUMBER	DESCRIPTION
LOS-SX1 (3) (future) LOS-SX3 (3) (future)	AB1 MLR pumps local operator stations (AB1 Rehab project) AB3 MLR pumps local operator stations
P-SX1 (3) (future) P-SX3 (3) (future)	AB1 MLR pumps (AB1 Rehab project) AB3 MLR pumps

B. MLR Pump Control Narrative: The mixed liquor recycle (MLR) pump rates will be flow-paced based on influent flow. The pumps will be powered by variable frequency drives located in the manufacturer-provided Aeration Basin 1 or 3 Local Control Panels, LCP-AB1 or LCP-AB3. Control will be provided by the same panels, which will flow-pace the pumps based on a 15-minute average of influent flow and an operator adjustable recycle ratio. Recycle rates will vary between 200 and 400 percent of influent flow, up to a maximum of 400 percent of the full build-out design maximum month flow of 8.5 mgd. The recycle ratio will be operator-entered in the following increments: 2.0, 2.5, 3.0, 3.5, 4.0.

Local operator stations for the MLR pumps will be provided near the pumps.

C. Plant SCADA Control Functions: Plant SCADA will not control the MLR pumps but will display status signals and allow for alarm acknowledgement. At a minimum, the following signals shall be displayed:

1. MLR Pump elapsed time (each unit)
2. LOS HOA switch position indication (each unit)
3. MLR Pump RUN indication (each unit)
4. MLR Pump speed indication (each unit)
5. MLR Pump Communication FAIL (each unit)
6. MLR Pump FAIL indication (each unit)
    a. Seal FAIL
    b. High temp FAIL
    c. High Amp draw indication (each unit)
7. Plant SCADA shall send an influent flow signal to LCP-AB1 and LCP-AB3.

D. Manufacturer Local Control Panel Functions: The manufacturer panel will contain the VFDs and will control the pumps as described above. The panel shall flow pace the pumps as described in the Control Narrative above. The panel shall send the above signals to the plant SCADA system.

E. LOS Function and Controls: The LOSs shall communicate directly with the Aeration Basin LCPs. LOSs shall have the following functions:

1. HOA switch
2. RUN indication light (green)
3. FAIL indication light (red)
4. Alarm RESET button

F. Sequence of Operation:

1. HAND Operation

    a. When the HOA switch at the LOS is in the HAND position, the pump runs continuously at the speed adjusted with the VFD speed potentiometer until the switch is turned to OFF, a fault occurs, or power to the pump is lost. If power to the MLR pumps is lost, LCP-AB1 or 3 may coordinate a staggered restart when power is restored. However, with an HOA switch set to HAND, LCP-AB1 or 3 does not control the pumps and all duty units will start as soon as power is restored.

2. Automatic Operation

    a. During normal operation, the LOS HOA switch will be in the AUTO position and LCP-AB1 or 3 will control the pumps and VFD speed. Therefore, the MLR pump HOA switches should always be left in the AUTO position. The MLR pumps will run continuously until the selector switch is turned to OFF, a fault occurs, or power is lost. When power is restored, the pumps will automatically start with the HOAs in the AUTO position. If an MLR pump is turned to OFF at the LOS, LCP-AB1 or 3 does not control the pump and the pump will not run until turned to AUTO at the LOS.

3. FAIL Signals

    a. Thermal switches are provided for each MLR pump motor. Excessive motor temperature will trip the thermal switches, which will stop the mixer motor. This alarm will clear when the motor cools; however, the pumps will need to be manually reset at the LOS before they can be restarted.
    b. A moisture FAIL (seal leak) alarm will display on CP-AB1 or 3 if the moisture relays in the pump enclosure are tripped. This alarm does not shut down the equipment.

1.09 CLARIFIER CONTROL LOOP (RTU-AB1/3)

A. Equipment and Instrumentation:

1. Grey text indicates equipment that is existing, supplied by Division 16, or future.

TAG NUMBER	DESCRIPTION
MCC-F / MSB-AB	Existing motor control center to be replaced with new main switch board
LCP-CLR2	Clarifier 2 feed and local controls (existing)
LCP-CLR3	Clarifier 3 local control panel (existing)
LCP-CLR4 (future)	Clarifier 4 local control panel

B. Note that this project will replace MCC-F with a new Main Switch Board (MSB-AB) in the new Aeration Basin Blower Building.

C. Clarifier Control Narrative: The clarifiers will operate continuously. If the clarifier drive experiences high torque, it will shut down and send a FAIL signal to SCADA.

D. Plant SCADA Control Functions: Plant SCADA does not control the clarifiers as they operate continuously. At a minimum, the following signals shall be displayed on the SCADA screen:

1. Clarifier RUN (each unit)
2. Clarifier FAIL (general fault, each unit)
3. Alarm Silence (each unit)
4. LCP-CLR2,3,4 communication fault

E. Manufacturer Local Control Panel, LCP-CLR2,3,4 Control Functions: The manufacturer panel will contain the motor starter and will provide some control and monitoring functions including the following:

1. HOA switch
2. RUN indication
3. FAIL indication
4. RESET button
5. Motor overload indication
6. Drive cutout indication
7. HIGH Torque alarm
8. Alarm silence button

1.10 DIGESTERS: AERATION CONTROL LOOP (RTU-DB)

A. Equipment and Instrumentation:

1. Black text indicates equipment and instrumentation to be supplied by the PICS contractor as part of the Blower Buildings project.
2. Grey text indicates equipment and instrumentation that is supplied by a manufacturer or will be supplied under a future project.

TAG NUMBER	DESCRIPTION
B-2 (3) B-2 (2) (future)	Blowers Blowers
LCP-B-2 (3) LCP-B-2 (2) (future)	Blower integral Local Control Panel Blower integral Local Control Panel
FE/FIT (2) FE/FIT (2) (future)	Thermal mass air flow meters for Digesters 1 and 2 Thermal mass air flow meters for Digesters 3 and 4
PI (3) (future) PI (2) (future)	Blower discharge pressure gauges Blower discharge pressure gauge

B. Digester Aeration System Summary:

1. Dedicated blowers and header piping will supply air to each digester.
2. Manual valving will allow for manual blower alternation.
3. Instrumentation will consist of one thermal mass air flow meter and one pressure gauge in each dedicated discharge pipe .

C. Aeration Control Narrative:

1. Blowers will be called to run by the SCADA system. Blowers will run continuously unless air on-off cycles are set in SCADA.
2. Blower speed will be set manually by operators.
3. The local control panel integral to each blower will monitor signals and communicate with SCADA through Ethernet protocol.

D. Plant SCADA Control Functions: Plant SCADA will call the blowers to RUN and will display status signals and allow for alarm acknowledgement. At a minimum, the following signals shall be displayed:

1. Blower elapsed time (each unit)
2. Blower LCP HOA switch position indication (each unit)
3. Blower RUN indication (each unit)
4. Blower speed indication (each unit)
5. Blower LCP Communication FAIL (each unit)
6. Blower FAIL indication (each unit)
7. Plant SCADA shall provide for operator input to schedule blower on-off cycles.

E. Blower Integral Local Control Panel Functions: The integral panel will communicate with SCADA and the MCC that contains the VFDs via Ethernet IP protocol. The local panel has a number of display and logging capabilities. The panel shall send the above signals to the plant SCADA system.

F. Sequence of Operation:

1. HAND Operation

   a. When the HOA switch at the LCP is in the HAND position, the blower runs continuously at the manually adjusted speed until the switch is turned to OFF, a fault occurs, or power to the blower is lost. If power to the blower is lost, RTU-DB may coordinate a staggered restart when power is restored. However, with an HOA switch set to HAND, RTU-DB does not control the pumps and all duty units will start as soon as power is restored.

2. Automatic Operation

   a. During normal operation, the LCP HOA switch will be in the AUTO or REMOTE position and RTU-DB will start and stop the blowers and apply any programmed on-off cycles. Therefore, the blower LCP HOA switches should always be left in the AUTO or REMOTE position. The blowers will run as directed by SCADA until the selector switch is turned to OFF, a fault occurs, or power is lost. When power is restored, the RTU is able to stagger restart of the blowers.

3. FAIL Signals

   a. The integral blower LCP logs a number of errors. Ethernet communication allows for selecting those errors for communication that are most useful to operators. The following signals are available:

      1) Motor oil temperature HIGH
      2) Inlet pressure HIGH
      3) Blower FAIL

1.11 MISCELLANEOUS SIGNALS

A. Equipment and Instrumentation:

1. Grey text indicates equipment and instrumentation that will be supplied by the general Contractor or under a separate project. Known projects are listed.

TAG NUMBER	DESCRIPTION
TE/TIT	Blower room temperature
TE/TIT (2)	Electrical rooms temperature

AE-OX1 (future) AE-OX1 (future)	AB1 pH probe (AB1 Rehab project) AB3 pH probe

B. Plant SCADA Monitoring Functions: The air compressor is generally a self-contained unit that will start and stop based on system pressure. Plant SCADA shall include monitoring for the following:

1. Blower building blower room temperature indication (future)
2. Blower building electrical rooms temperature indication (each room)
3. Measuerd pH value for each pH probe
4. Low pH setpoint
5. Low pH alarm

1.12 PLANT SCADA FUNCTION SUMMARY TABLE

A. Legend:

1. D – Display on a screen
2. S – Display and operator input on a screen
3. Alarm Level Priority 1
4. Alarm Level Priority 2
5. Alarm Level Priority 3
6. L – Logged to database
7. T – Display on trend

B. The following list may not contain all required plant SCADA functions and signals. The contractor is to do a detailed take-off from all drawings and specifications and determine all required tags and signals.

Signal/Tag Description	Display and Register Type	Alarm Level	Trend/Logging	Notes
Influent Flow	D			For MLR pump control
Aeration Basin Air Flow Rate (for each basin)	D		L, T	As measured by future thermal mass air flow meters in the Blower Building
Aeration Basin Out of Service Selection (for each aeration basin including AB2)	S			
DO value (for each zone with DO probe)	D		L, T	
DO Setpoint (for each aerated zone)	S			
DO Control Mode Selection (for each aeration basin)	S			APC (cascade APC and PID), DO with Flow PID and Manual Setpoint

Signal/Tag Description	Display and Register Type	Alarm Level	Trend/Logging	Notes
DO Response Time Setpoint (for each cell with DO)	S			
DO Dead band Setpoint (For each cell DO)	S			
DO Control Flow Increase/Decrease Setpoint (for each Bioreactor cell with DO)	S			
Air Flow (for each thermal mass flowmeter)	D		L, T	
Air Flow Totalized Value (for each aeration basin)	D		L	
Air Flow Daily Totalized Value (for each aeration basin)	D		L	
Air Flow Control Valve Local Switch in Remote (for each air flow control valve)	D			
Air Flow Control Valve Position (for each valve)	D		L,T	
Air Flow Control Valve General Fault (for each valve)	D	2	L	
Air Flow Control Valve Communication Fault (for each valve)	D	2	L	
pH Value (for each zone with pH probe)	D		L,T	
pH Low Alarm (for each pH probe)	D	3	L	
pH Alarm Setpoint (for each pH probe)	S			
pH Low-Low Alarm Setpoint (for each pH probe)	S			
Analytical Instrument General Fault (for each probe)	D	2	L	
Analytical Instrument Communication Fault (for each probe)	D	2	L	
Mixer Running Mode (for each Mixer)	D		L	
Mixer Faulted Mode (for each Mixer)	D	2	L	
Mixer Moisture Fault (for each Mixer)	D	2	L	
Mixer Comm. Fault (for each Mixer)	D	2	L	
Mixer Current (for each Mixer)	D		L,T	
Mixer Runtime Hours (for each Mixer)	D		L	
MLR Pump LOS in Auto (for each MLR Pump	D			
MLR Pump Running Mode (for each MLR Pump)	D		L	
MLR Pump Faulted Mode (for each MLR Pump)	D	2	L	
MLR Pump Moisture Fault (for each MLR Pump)	D	2	L	
MLR Pump Comm. Fault (for each MLR Pump)	D	2	L	
MLR Pump Current (for each MLR Pump)	D		L,T	
MLR Speed Feedback (for each MLR Pump)	D		L,T	
MLR Pump Ratio Setpoint (for each MLR Pump)	S			
MLR Pump Speed Setpoint in Hand Mode (for each MLR Pump)	S			
MLR Pump Runtime Hours (for each MLR Pump)	D		L	
Clarifier Running Mode (for each clarifier)	D			
Clarifier Faulted Mode (for each clarifier)	D	3	L	

Signal/Tag Description	Display and Register Type	Alarm Level	Trend/Logging	Notes
Blower Room Temperature	D		L,T	
Electrical Rooms Temperature	D		L,T	

1.13 INPUT/OUTPUT TABLES

A. All signals from the LCP-AB panels will be communicated via Ethernet protocol.

B. All communication with the aeration basin blowers will be by Ethernet protocol.

INPUT/OUTPUT TABLE AERATON BASIN RTU, RTU-AB					
ITEM	**DISCRETE INPUT DI**	**DISCRETE OUTPUT DO**	**ANALOG INPUT AI**	**ANALOG OUTPUT AO**	**NOTES**
AERATION CONTROL LOOP					
Influent Flow			1 (from SCADA)	2 (to LCP-AB1,3)	MLR pump speed control
LCP-AB1, 2, 3 General Fault	2 (from LCP-AB1,2,3)	2 (to SCADA)			
BIP-AB1, 2, 3 General Fault	2 (from BIP-AB1,2,3)	2 (to SCADA)			
Blower Room Temperature			1 (from TIT)	1 (to SCADA)	
Electrical Rooms Temperature			2 (from TIT)	2 (to SCADA)	
Measured DO Value			6 (from AE-OX)	6 (to SCADA)	
Measured pH Value			2 (from AE-OX)	2 (to SCADA)	
Probe FAIL (DO, pH)			8 (from AE-OX)	8 (to SCADA)	
Measured Air Flow Rate			6 (from FIT)	6 (to SCADA)	Each cell, exterior meters
Measured Air Flow Rate			2 (from FIT)	2 (to SCADA)	Each AB, future interior meters
Air Flow Control Valve HOA Position Indication	6 (from FCV-OX)	6 (to SCADA)			

INPUT/OUTPUT TABLE AERATON BASIN RTU, RTU-AB					
ITEM	**DISCRETE INPUT DI**	**DISCRETE OUTPUT DO**	**ANALOG INPUT AI**	**ANALOG OUTPUT AO**	**NOTES**
Air Flow Control Valve Open/Close Command	6 (from SCADA)	6 (to FCV-OX)			
Air Flow Control Valve Position Command	6 (from SCADA)	6 (to FCV-OX)			
Air Flow Control Valve Position Indication			6 (from FCV-OX)	6 (to SCADA)	
Air Flow Control Valve Loss of Air Fault	6 (from FCV-OX)	6 (to SCADA)			
Air Flow Control Valve Comm Faults	6 (from FCV-OX)	6 (to SCADA)			
Blower Room Temperature			1 (from TIT)	1 (to SCADA)	
Electrical Rooms Temperature			2 (from TIT)	2 (to SCADA)	
CLARIFIER CONTROL LOOP					
Clarifier RUN Indication	3 (from LCP-CLR2,3,4)	3 (to SCADA)			
Clarifier FAIL Indication	3 (from LCP-CLR2,3,4)	3 (to SCADA)			
TOTAL	**40**	**40**	**37**	**38**	
Spares	8	8	13	12	
TOTAL Plus SPARE	**48**	**48**	**48**	**48**	

END OF SECTION 40 60 10.01

PART 1 GENERAL

1.01 DESCRIPTION OF WORK

A. This section covers instrumentation and associated electrical equipment and appurtenances for a complete PICS.

1.02 RELATED SECTIONS

A. The work of the following sections is related to the work of this section. Other sections, not referenced below, may also be related to the proper performance of this work. It is the Contractor's responsibility to perform and coordinate all the work required by the Contract Documents.

1. Section 01 33 00 – SUBMITTALS
2. Section 01 66 00 – PRODUCT SHIPMENT, HANDLING, STORAGE, AND PROTECTION
3. Section 01 66 40 – MANUFACTURER'S SERVICES
4. Section 01 77 00 – CONTRACT CLOSEOUT
5. Division 26 00 00 – ELECTRICAL
6. Section 46 60 10, PROCESS INSTRUMENTATION & CONTROL SYSTEM (PICS) – GENERAL
7. P&ID Drawings

1.03 SUBMITTALS

A. Component Parts List: The Component Parts List shall be a complete parts list for the entire instrumentation and control system, and shall have the following features:

1. All components shall be grouped by facility and then by component type, with the component types identified in a similar manner to the component identification code used in these Specifications.
2. All components shall be listed with their exact and complete manufacturer's part number, including all options or accessories.
3. All components shall be identified with their complete tag number as shown in these Specifications, or as modified or assigned by the PICS Subcontractor and approved by the Engineer.
4. All components without tag numbers shall be grouped within component types by manufacturer's part number. Exact quantities shall be listed for each part number.

B. PLC programming submittal:

1. Control system description / narrative

a. Description of function for each control loop
b. Identification of all I/O with associated alarms and scaling
c. Cause and effect matrix for outputs (motors, control valves, etc.)

C. Submit catalog information, descriptive literature, wiring diagrams, and shop drawings on all panels, controllers, recorders, indicators, transmitters, primary elements, flow measuring equipment and appurtenances, pressure regulating valves, gauges, and all other components of the system as follows:

1. Individual data or specification sheets shall be provided for all components provided under this section citing all specific features for each specific component (e.g.: part number, scale range, materials of construction, special options included, etc.). Each component data sheet shall bear the component name and instrument tag number designation shown in the Drawings and Specifications.
2. Catalog information on electrical devices furnished under this section.
3. Shop drawings and catalog material for all new control panels and enclosures.
4. Panel elementary diagrams of pre-wired panels. Diagrams shall be similar to those diagrams shown on the Drawings, but with the addition of all switched analog signals and all auxiliary devices such as relays, alarms, fuses, lights, fans, heaters, etc.
5. Interconnecting point-to-point wiring diagrams, showing all component and panel terminal board identification numbers and external wire numbers. This diagram shall include all intermediate terminations between field elements and panels (e.g., terminal junction boxes, motor control centers, etc.), and 120 VAC power supply circuits.
6. Input/output instrumentation loop diagrams, which shall consist of wiring diagrams for each discrete and analog loop, showing all terminal numbers, the location of the DC power supply, the location of any booster or logic transfer relays or common dropping resistors, etc. The diagrams shall be divided into three areas for identification of element locations: I/O panel terminals, control panel, and field, respectively. I/O panel and control panel window areas shall show the transmitters, digital panel meter, power supplies, and all other components required to operate a single field instrument’s loop(s). Field window areas shall depict the field sensor, a diagrammatic representation of where the sensor is located in relation to other equipment, and the wiring connections to the sensor. It shall be the Contractor’s responsibility to ensure that the loop diagrams and

actual equipment being furnished, and associated wiring, agree with the wiring and schematic diagrams.

7. Power requirement summary for all control panels. Power requirements shall state required voltages, currents, and phases(s).

D. Spares and Expendables:

1. Provide recommended spares and expendable items in sufficient quantities to support the PICS for a period of 3 years after the date of Substantial Completion.

1.04 ENVIRONMENTAL REQUIREMENTS

A. Environmental Design Requirements: Following defines the types of environments referred to in the above.

1. Inside, Air Conditioned:

a. Temperature:

1) Normal: 60 to 90 degrees F.
2) With Up to 4-Hour HVAC System Interruptions: 40 to 120 degrees F.

b. Relative Humidity:

1) Normal: 10 percent (winter) to 70 percent (summer).
2) With Up to 4-Hour HVAC System Interruption: 10 to 100 percent.

c. NEC Classification: Nonhazardous.

2. Inside, Non-Conditioned:

a. Temperature: 45 to 120 degrees F.
b. Relative Humidity: 10 to 95 percent noncondensing.
c. NEC Classification: Nonhazardous.

3. Outside:

a. Temperature: 32 to 125 degrees F.
b. Relative Humidity: 10 to 100 percent, sun, rain, snow, freezing rain.
c. NEC Classification: Nonhazardous.

PART 2 PRODUCTS

2.01 GENERAL

A. For equipment listed under COMPONENT SPECIFICATIONS, the design is based on the first named manufacturer. Listed manufacturers and/or model numbers shall be deemed to be used for the purpose of establishing a standard of quality and facilitating the description of the material or process desired. This procedure is not to be construed as eliminating from competition other products of equal or better quality by other manufacturers where fully suitable in design and shall be deemed to be followed by the words "or equal". The decision relative to equality shall be solely by the Engineer.

B. Should the Contractor select other equipment that requires different installation requirements, wiring and conduit, enclosures, intrinsically safe barriers, accessories, etc., the Contractor shall obtain approval from the Engineer for such changes to the design and shall make all approved changes at no additional cost to the Owner or Engineer.

C. Field Installed Equipment: Equipment not installed in control panels, such as primary elements and transmitters shall be provided as specified herein.

2.02 SIGNAL CHARACTERISTICS

A. Analog Signals, Current Type:

1. 4 to 20mA dc signals conforming to ISA S50.1.
2. Unless otherwise indicated for specific PICS Subsystem components, use the following ISA 50.1 options:

    a. Transmitter Type: Number 2, two-wire.
    b. Transmitter Load Resistance Capacity: Class L.
    c. Fully isolated transmitters and receivers.

3. Analog Signals, Voltage Type: 1 to 5 volts dc within panels where a common high precision dropping resistor is used.
4. Analog Input (AI) signals shall be field powered and not require power from the PLC.
5. Furnish signal isolation for analog signals that are sent from one enclosure to another. Do not wire in series instruments on different panels, cabinets, or enclosures.

B. Discrete signals are two-state logic signals of two types. Discrete Input (DI) signals to the PLC must be dry contact relays capable of accepting 120VAC, 0.25A. The relay coil is to be energized from field power, the PLC will

provide power for the Common/N.O./N.C. contacts, indicating input status. Discrete Output (DO) signals from the PLC will be dry contact relays capable of accepting 120VAC, 0.25A. The relay coil is to be energized from the PLC power. The field source will provide power for the Common/N.O./N.C. contacts, starting the field device. Any alarm signals external to control panel shall be normally open, close to alarm. Provide isolated contacts rated for 5 amperes at 120 VAC and 2 amperes at 30 VDC as a minimum contact rating.

C. Pulse Frequency Signals:

1. Direct current pulses whose repetition rate is linearly proportional to process variable.
2. Pulses generated by contact closures or solid-state switches as indicated.
3. Power source less than 30V dc.

D. Special Signals: Other types of signals used to transmit analog and digital information between field elements, transmitters, receivers, controllers, and digital devices.

2.03 ELECTRIC POWER AND SIGNAL WIRING

A. Provide electric power and signal wiring as shown on the Drawings.

B. Control and signal wiring external to the control panels and all power wiring shall conform to Division 26, ELECTRICAL.

C. Control and signal wiring in control panels shall be restrained by plastic ties or ducts. Hinge wiring shall be secured at each end so that any bending or twisting will be around the longitudinal axis of the wire and the bend area shall be protected with a sleeve.

D. Arrange wiring neatly, cut to proper length, and remove surplus wire. Provide abrasion protection for any wire bundles which pass through holes or across edges of sheet metal.

E. Use Manufacturer's recommended tool with the proper sized anvil, for all crimp terminations. No more than two wires may be terminated in a single crimp lug and no more than two lugs may be installed on a single screw terminal.

F. An insulating barrier shall be constructed between 480, 240 or 120VAC power wiring and other voltages within a panel. Terminations of the power wiring shall be protected to prevent incidental contact by an operator.

G. Wires within Enclosures:

1. AC Circuits:

   a. Type: 300-volt, Type MTW stranded copper, unless equipment manufacturer requires higher voltage rating.
   b. Size: For current to be carried, but not less than No. 18 AWG.

2. Analog Signal Circuits:

   a. Type: 300-volt stranded copper, twisted shielded pairs, rated for instrumentation signal usage, unless equipment manufacturer requires higher voltage rating.
   b. Size: No. 18 AWG, minimum.

3. Other DC Circuits.

   a. Type: 300-volt, Type MTW stranded copper, unless equipment manufacturer requires higher voltage rating.
   b. Size: For current carried, but not less than No. 18 AWG.

4. Special Signal Circuits: Use manufacturer's standard cables.
5. Wire Identification: Numbered and tagged at each termination.

   a. Wire Tags: Slip on, heat shrink wire labels with machine printed markings and numbers. Adhesive, snap on, or taped-on tags are not acceptable.
   b. Manufacturers: Brady Perma-Sleeve, or equal.

H. Wires entering or leaving enclosures, terminate and identify as follows:

1. Analog and discrete signal, terminate at numbered terminal blocks.
2. Twisted shielded pair conductors must have shield floating on the field end and terminated to ground in the Control Panel.
3. Special signals; terminated using manufacturer's standard connectors.

I. Wire shall be enclosed in either a sheet metal raceway, or plastic wiring duct. Wiring for signal circuits shall be separated at least 8 inches from any power wiring.

J. All interconnecting wires between panel mounted equipment and external equipment shall be terminated at numbered terminal blocks. All wires shall be identified per the requirements of Section 26 05 19, LOW VOLTAGE ELECTRICAL POWER CONDUCTORS AND CABLES.

2.04 TERMINAL BLOCKS

A. Terminal Blocks for Enclosures:

1. Quantity:

a. Accommodate present and spare indicated needs.
b. Wire spare I/O points to FLEX I/O terminal blocks.
c. One wire per terminal for field wires entering enclosures.
d. Maximum of 2 wires per terminal for 18 AWG wire for internal enclosure wiring.
e. Spare Terminals: 25 percent of all connected terminals, but not less than 10 per terminal block.

2. General:

a. Connection Type: Screw compression clamp.
b. Compression Clamp:

1) Complies with DIN-VDE 0611.
2) Hardened steel clamp with transversal groves that penetrate wire strands providing a vibration-proof connection.
3) Guides strands of wire into terminal.

c. Screws: Hardened steel, captive and self-locking.
d. Current Bar: Copper or treated brass.
e. Insulation:

1) Thermoplastic rated for 32 to plus 200 degree F.
2) Two funneled shaped inputs to facilitate wire entry.

f. Mounting:

1) Standard DIN rail.
2) Terminal block can be extracted from an assembly without displacing adjacent blocks.
3) End Stops: Minimum of one at each end of rail.

g. Wire preparation: Stripping only permitted.
h. Jumpers: Allow jumper installation without loss of space on terminal or rail.
i. Marking System:

1) Terminal number shown on both sides of terminal block.

2) Allow use of preprinted and field marked tags.
3) Terminal strip numbers shown on end stops.
4) Mark terminal block and terminal strip numbers as shown on Panel Control Diagrams and Loop Diagrams.
5) Fuse Marking for Fused Terminal Blocks: Fuse voltage and amperage rating shown on top of terminal block.

j. Test Plugs: Soldered connections for No. 18 AWG wire.

1) Pin Diameter: 0.079 inch.
2) Manufacturer and Product: Allen Bradley; 1492-J4 series terminal blocks.

3. Terminal Block, General-Purpose:

a. Rated Voltage: 600 VAC.
b. Rated Current: 30 amp.
c. Wire Size: No. 22 to 10 AWG.
d. Rated Wire Size: No. 10 AWG.
e. Color: Grey body.
f. Spacing: 0.25 inch, maximum.
g. Test Sockets: One screw test socket 0.079-inch diameter.
h. Manufacturer and Product: Allen Bradley; 1492-J4 series terminal blocks.

4. Terminal Block, Ground:

a. Wire Size: No. 22 to 12 AWG.
b. Rated Wire Size: No. 12 AWG.
c. Color: Green and yellow body.
d. Spacing: 0.25 inch, maximum.
e. Grounding: Ground terminal blocks electrically grounded to the mounting rail.
f. Manufacturer and Product: Allen Bradley; 1492-JG6 series terminal blocks.

5. Terminal Block, Blade Disconnect Switch:

a. Rated Voltage: 600 VAC.
b. Rated Current: 10-amp.
c. Wire Size: No. 22 to 12 AWG.
d. Rated Wire Size: No. 12 AWG.
e. Color: Grey body, orange switch.
f. Spacing: 0.25 inch, maximum.
g. Manufacturer and Product: Allen Bradley; 1492-JKD4 series terminal blocks.

6. Terminal Block, Fused, 24 VDC:

    a. Rated Voltage: 600 VDC.
    b. Rated Current: 16-amp.
    c. Wire Size: No. 22 to 10 AWG.
    d. Rated Wire Size: No. 10 AWG.
    e. Color: Grey body.
    f. Fuse: 0.25 inch by 1.25 inch.
    g. Indication: LED diode 24 VDC.
    h. Spacing: 0.512 inch, maximum.
    i. Manufacturer and Product: Allen Bradley; 1492-H5 series terminal blocks.

7. Terminal Block, Fused, 120 VAC:

    a. Rated Voltage: 600 VAC.
    b. Rated Current: 16-amp.
    c. Wire Size: No. 22 to 10 AWG.
    d. Rated Wire Size: No. 10 AWG.
    e. Color: Grey body.
    f. Fuse: 0.25 inch by 1.25 inch.
    g. Indication: Neon Lamp 110 VAC.
    h. Leakage Current: 1.8 mA, maximum.
    i. Spacing: 0.512 inch, maximum
    j. Manufacturer and Product: Allen Bradley; 1492-H5 series terminal blocks.

8. Terminal Block, Fused, 120 VAC, High Current:

    a. Rated Voltage: 600 VAC.
    b. Rated Current: 35 amps.
    c. Wire Size: No. 18 to 8 AWG.
    d. Rated Wire Size: No. 8 AWG.
    e. Color: Grey.
    f. Fuse: 13/32 inch by 1.5 inch.
    g. Spacing: 0.95 inch, maximum.
    h. Manufacturer and Product: Allen Bradley; 1492-H5 series terminal blocks.

2.05 RELAYS

A. Control circuit switching, not accomplished by the Flex I/O shall be accomplished with relays.

B. Relays for interfacing and control applications shall be the compact, general purpose plug-in type. Contact arrangements shall be as noted or shown and

shall be rated for not less than 10 amperes at 120 VAC or 28 VDC. Coil voltage shall be as noted or shown.

C. Relays shall have plain plastic dust covers and mounting sockets with screw terminals and hold-down springs. Relays shall be UL recognized.

D. Relays shall be Potter and Brumfield KUP or KUL series; IDEC RH Series; or equal.

E. All relays shall have a screw terminal interface with the wiring. Terminals shall have a permanent, legible identification. Relays shall be mounted such that the terminal identifications are clearly visible and the terminals are readily accessible.

F. Time delay relays shall be multi-timing function type, using digital electronic circuitry and shall provide a wide range of adjustable time delays. As much as possible, all time delay relays used on this project shall be the same brand and serial number. Relays shall be UL listed. Contacts shall be DPDT, rated for 120 VAC, 7 amps, minimum.

G. Time delay relays shall be ATC Series 328, IDEC Series RTE; or equal.

2.06 AERATION BASIN RTU-AB1/3, DIGESTER BASIN RTU-DB

A. The RTU-AB1/3 will include an Allen-Bradley Flex I/O platform which will connect to the process equipment and communicate via Ethernet IP protocol to the Main Plant CTU, PLC-1. It will receive communication via Ethernet IP from the manufacturer-supplied Aeration Basin 2 Local Control Panel, LCP-AB1/3.

1. This panel will be installed outside and must be suitable for the outside conditions listed above.

B. The RTU-DB will include an Allen-Bradley Flex I/O platform which will connect to the process equipment and communicate via Ethernet IP protocol to the Main Plant CTU, PLC-1. It will receive communication via Ethernet IP from the integral blower LCPs.

1. This panel will be installed in an airconditioned electrical room at the conditions listed above.

C. Panels shall be completely fabricated, electrical components installed and wired in the factory. Wiring shall be completed and tested prior to shipment. All external connections shall be by way of numbered terminal blocks.

D. Flex I/O Components:

1. Provide number of cards to match I/O needs listed in the table at the end of this specification.
2. Terminal Base, Screw Type, P/N 1794-TBN.
3. Flex Power Supply, P/N 1794-PS13.
4. Communications Module, Ethernet IP, P/N 1794-AENT.
5. DI Module, 120VAC Isolated Inputs, P/N 1794-IA8I.
6. DI Module, 24VDC Sink Inputs, P/N 1794-IB8.
7. AI Module, Single-ended, Isolated Inputs, P/N 1794-IF4I.
8. DO Module, 120VAC Isolated Outputs, P/N 1794-OA8I.

E. The panel shall be factory wired to accept all functions associated with operation of Aeration Basin 2 and communication from and to LCP-AB1/3.

F. Sufficient terminal blocks shall be provided to terminate all spare annunciator points and spare conductors. In addition, 15 percent unused spare terminals shall be provided.

G. Connections for future functions shall be wired to FLEX I/O numbered terminal blocks, grouped separate from the terminal blocks in use. Terminal blocks shall also be grouped to keep 120VAC and 24VDC separated.

H. An Uninterruptible Power Supply (UPS) shall be installed to provide power for the panel equipment during the time Main power is lost and the Emergency power comes on-line.

1. Allen-Bradley P/N 1609-U500NHC.

I. A Surge Suppressor shall be installed on the incoming 120VAC panel power.

1. Allen-Bradley P/N 4983-DS120-402.

J. An internal panel light with door switch shall be provided, Stego P/Ns 2540.0 & 244357.

K. A managed Ethernet switch shall be installed into the enclosure, Fortinet, Forti Switch Rugged-112D-POE.

L. Grounding of Enclosures:

1. Ground bus grounded at a common ground point in accordance with National Electrical Code requirements.
2. Bond panel mounting plate to common ground point.
3. Ground terminal block rails to ground bus.
4. Use Grounding terminal blocks for twisted shielded pair shields.

M. Panel Construction:

1. Panel shall be hinged and shall include lockable lever handle for opening and closing.
2. Type:

    a. Interior only, NEMA Type 12, wall mount.
    b. Exterior only, NEMA Type 4X, stainless steel, wall mount.

3. All panels shall be designed to permit continuous operation of all components mounted therein with panel ambient temperatures of up to 120ºF. Panel shall be provided with louvers and/or forced ventilation as required to prevent temperature buildup due to electrical devices mounted in or on the panel. Louvers shall be on the sides. Forced ventilation fans, where used, shall be provided with washable or replaceable filters. Fan motors shall operate on 120-volt, 60 Hz power.
4. Provide all UL rated other equipment, including, but not limited to: Power supplies, terminal blocks, fuses, wire tray, and all other ancillary components necessary to complete the Control Panel.
5. Wire all provided I/O points to appropriate Flex I/O modules.
6. Panels shall be standard products as manufactured by Hoffman, Wiegand, or equal.

2.07 POWER SUPPLIES

A. Provide DC power supplies as required to power instruments requiring external DC power. Redundant DC power supplies shall be installed in each Remote I/O enclosure.

B. Power supplies shall convert 120 VAC, 60 Hz power to 24 volt DC power or other DC voltages required.

C. Requirements

1. Safety: UL 508 listed.
2. MTBF: Greater than 500,000 hours in accordance with IEC 61709.
3. Mounting: 35mm DIN-rail conforming to DIN EN 50022.
4. Operating Temperature: -25°C to +70°C.
5. Minimum Efficiency: 88% at full load.
6. Voltage Adjustments: By means on front of unit.
7. Finger Safe: In accordance with IEC 529.
8. Short Circuit Current: Automatically limited with automatic reset when fault is corrected.
9. Failure Indication: Contact for remote indication of failure if input supply power is lost.

D. Provide NEMA enclosure for all power supplies outside the control panel.

E. Power supplies shall be mounted so that dissipated heat does not adversely affect other components.

F. Manufacturer: Allen-Bradley, P/N 1606XL120DR.

2.08 CORROSION PROTECTION

A. Provide a Corrosion-Inhibiting Vapor Capsule in each Control Panel. Corrosion-Inhibiting Vapor Capsule Manufacturers:

1. Northern Instruments; Model Zerust VC.
2. Hoffmann Engineering Co; Model A-HCI.

2.09 NAMEPLATES, NAME TAGS, AND SERVICE LEGENDS

A. All components provided under this section, both field and panel mounted, shall be provided with permanently mounted name tags bearing the entire instrument tag number of the component. Panel mounted tags shall be plastic; field mounted tags shall be stamped stainless steel.

B. Service legends and nameplates shall be engraved, rigid, laminated plastic type with adhesive back. Unless otherwise noted, color shall be black with white letters, and letter height shall be 3/16 inch. Service legends shall also, where possible, be engraved on illuminated lenses.

2.10 COMPONENT SPECIFICATIONS

A. GENERAL

1. The following are detailed but generalized component/assembly specifications. Where components are proposed that are other than those specified, the Engineer reserves the right to decide on their equality.

B. P1 - PRESSURE GAUGE

1. Tags: PI
2. The pressure gauge shall have the following characteristics:

a. Type: Bourdon tube, liquid filled
b. Case: Black aluminum
c. Dial: 2 ½” with white face and black letters, glass lens
d. Connection size: ¼”
e. Wetted parts: Type 316 SST

f. Accuracy: 1% full scale
g. Working pressure: Maximum 75% of full scale

C. T1 - TEMPERATURE SENSOR

1. Tags: TE/TIT
2. The temperature sensor shall have the following characteristics:

a. Input: Platinum RTD, 100Ω @ 0°C.
b. Output Signal: 4-20 mA DC.
c. Power Requirements: 12-35 volts DC.
d. Accuracy: Standard accuracy.
e. Thermal Drift: 0.00385 Ohms/Ohm/°C.
f. Probe Construction: 3" long, 0.25" O.D. Type 304 Stainless Steel.
g. Temperature Range**:** -40F – 140F
h. Lead Configuration: 3 wire.
i. Transmitter: Mounted inside connection head.
j. Sheath: Stainless steel
k. Connection Head: Rated for location installed.

3. Manufacturer: National Basic Sensor 10C- series or equal.

D. F1 - THERMAL MASS AIR FLOW METER

1. Tags: FE/FIT
2. Flow Element:

a. Insertion type, thermal dispersion element
b. Materials of construction: 316 SST body, packing gland, and compression fitting, Teflon ferrule, Hastelloy-C or stainless steel thermowell sensors.
c. ¾” MNPT and ¾” standard-duty ball valve (FCI 025172-10, or equal)
d. Insertion length per Drawings.

3. Flow Transmitter/Indicator:

a. Power Supply: 120VAC
b. Output: 4-20mA Analog
c. Display: LCD, user scalable
d. Temperature Compensation: 0 to 250 °F
e. Flow Rate: 0 – 1,000 scfm
f. Accuracy: ± 2% reading, ± 0.5% full scale
g. Enclosure: powdered coated
h. Operating Temperature: 40 – 250 °F

i. Installation: Integral or remote, coordinate with Drawings.

4. Flow Conditioning Device

   a. Inline type
   b. Mounting: flange mounted, ANSI B16.5
   c. Materials of construction: 316L SST.
   d. Size: coordinate with Drawings

5. Manufacturer: Fluid Components International, LLC or approved equal.

PART 3 EXECUTION

3.01 GENERAL

A. Install materials and equipment in a workmanlike manner utilizing persons skilled in the trade. Provide work which has a neat and finished appearance.

3.02 DELIVERY, STORAGE, AND HANDLING

A. Provide site and warehouse storage facilities for instrumentation.

B. Prior to shipment, include corrosive-inhibitive vapor capsules in shipping containers, and related equipment as recommended by the capsule manufacturer.

C. Prior to installation, store items in dry indoor locations. Provide heating in storage areas for items subject to corrosion under damp conditions.

D. Cover panels and other elements that are exposed to dusty construction environments.

3.03 PROTECTION DURING CONSTRUCTION

A. Throughout this Contract, the Contractor shall provide protection for materials and equipment against loss or damage and the effects of weather. Prior to installation, store items in indoor, dry locations. Provide heating in storage areas for items subject to corrosion under damp conditions. Specific storage requirements shall be in accordance with the manufacturer's recommendations.

3.04 CORROSION PROTECTION

A. All control panels, enclosures, and other equipment containing electrical or instrumentation and control devices, including spare parts, shall be

protected from corrosion through the use of corrosion inhibiting vapor capsules. Prior to shipment, the capsules shall be provided within the shipping containers and equipment as recommended by the capsule manufacturer.

B. Corrosion-Inhibiting Vapor Capsule Manufacturers:

1. Northern Instruments; Model Zerust VC.
2. Hoffmann Engineering Co; Model A HCI.

3.05 EQUIPMENT FINISH

A. Provide materials and equipment with manufacturer's standard finish. Provide manufacturer's standard finish color, except where specific color is indicated. If manufacturer has no standard color, finish equipment with light gray color.

3.06 CLEANING AND TOUCHUP PAINTING

A. Keep the premises free from accumulation of waste material or rubbish. Upon completion of work, remove materials, scraps, and debris from premises and from interior and exterior of all devices and equipment. Touchup scratches, scrapes, or chips in interior and exterior surfaces of devices and equipment with finishes matching as nearly as possible the type, color, consistency, and type of surface of the original finish.

3.07 MATERIAL AND EQUIPMENT INSTALLATION

A. Follow manufacturers' installation instructions explicitly, unless otherwise indicated. Wherever any conflict arises between manufacturers' instructions, and these Contract Documents, follow Engineer's decision, at no additional cost to Owner. Keep copy of manufacturers' installation instructions on the jobsite available for review at all times.

3.08 GENERAL INSTALLATION

A. Panels and panel mounted equipment shall be assembled as far as possible at the factory. No work other than correction of minor defects or minor transit damage shall be done on the panels at the jobsite. Upon completion of work, remove materials, scraps, and debris from premises and from interior and exterior of all devices and equipment. Touchup scratches, scrapes, or chips in interior and exterior surface finishes with material matching original color and finish.

B. Wiring shall not be spliced or tapped except at device or terminal blocks. No more than two wires may be terminated in a single crimp lug, and no more than two lugs may be installed on a single screw terminal.

C. General Contractor shall coordinate with instrument suppliers, the electrical contractor, and other project contractors to ensure that:

1. All components provided under this section are properly installed.
2. The proper type, size, and number of control wires and conduits are provided and installed.
3. The proper type, size, and number of pneumatic tubes and conduits are provided and installed.
4. Proper electric power circuits are provided to supply all components and systems.

3.09 FUNCTIONAL TESTING

A. Instruments associated with equipment systems shall be functionally tested along with the equipment system they are integrated into. Startup procedures shall include simulation of all alarm settings to trigger alarms.

B. Contractor shall certify instrumentation along with equipment systems for proper installation and operation.

END OF SECTION 40 60 10.03

(This page intentionally left blank)

PART 1 GENERAL

1.01 WORK INCLUDED

A. This section covers the work necessary to protect, relocate, install, test, and commission the turbo blower equipment and accessories. The Contractor shall provide all labor, materials, equipment, and incidentals as shown, specified and required to relocate, install and test the turbo blowers complete with equipment, piping, internals and appurtenances.

B. Two blowers are currently in use in the existing blower building. Equipment information for the existing blowers is included in an appendix to this specification.

C. A third identical blower shall be furnished by the Contractor as part of this project per Section 43 11 20, AIR FOIL BEARING TURBO BLOWER.

D. The existing blower system generally consists of the following:

1. Two (2) turbo blowers
2. Two (2) harmonic filters
3. Two (2) 10-inch butterfly valves
4. Two (2) 10-inch check valves
5. Two (2) 10-inch expansion joints
6. Two (2) 6-inch expansion joints
7. Two (2) remote inlet filters
8. As noted on the Drawings, Contractor may reuse valves and expansion joints.

1.02 GENERAL

A. See GENERAL CONDITIONS and Division 01, GENERAL REQUIREMENTS, which contain information and requirements that apply to the work specified herein and are mandatory for this project.

1.03 DEFINITIONS

A. When the following words are used herein, the intent and meaning shall be interpreted as follows:

1. Manufacturer – Turbo Blower Equipment System Manufacturer:

AERZEN USA CORPORATION
Clayton Houck
Project Manager
(484) 798-7669

chouck@aerzen.us

2. Turbo Blower Equipment – Enclosure, blowers and filters
3. System – Turbo blower equipment plus valves, harmonic filters, and ancillary equipment provided by the Manufacturer.
4. Contractor – Installing General Contractor responsible for installing System equipment, components and accessories in accordance with the Drawings, Specifications and Manufacturers recommendations.

1.04 SUBMITTALS

A. Submit a construction sequencing plan for installation of the new blower and relocation of the existing blowers that demonstrates that blower downtime is minimized and aeration of the aeration basin in service is maximized.

1.05 MANUFACTURER'S SERVICES

A. The Contractor shall engage the Manufacturer's representative for installation inspection and certification, testing, and startup assistance of the relocated blowers for the minimum person-days listed, travel time excluded:

1. Two person-days. These days shall be in addition to the days specified in Section 43 11 20, AIR FOIL BEARING TURBO BLOWERS.

PART 2 PRODUCTS

2.01 CONTRACTOR FURNISHED ACCESSORIES

A. The Contractor shall furnish System accessories are as shown on the Drawings. This generally includes, but is not limited to:

1. Anchor bolts, fasteners, and mounting hardware as shown on the Drawings and recommended by the Manufacturer.

PART 3 EXECUTION

3.01 PREPARATION FOR TRANSPORT AND PROTECTION

A. Equipment shall be protected in accordance with the requirements of Volume 1, Section 01 66 00, PRODUCT HANDLING, STORAGE, AND PROTECTION of Division 01, GENERAL REQUIREMENTS. In addition, the following shall be done:

1. Care during transport and procedures for installation, lubrication and startup of the pumps and motors shall be in strict conformance with the Manufacturer's instructions.

3.02 EQUIPMENT INSTALLATION

A. Install the equipment in accordance with the Manufacturer's directions and these Specifications. Where Manufacturer's instructions conflict with this specification, Manufacturer's instructions shall govern.

B. Installation shall utilize standard torque values and be installed secure in position and neat in appearance. Installation shall include any site preparation tasks, pre-installation tasks as determined by the Manufacturer; such as local assembly, touch-up painting, etc. and any other installation tasks and materials such as wiring, conduit, controls stands, as specified by the Manufacturer.

1. A representative of the Manufacturer shall be present to certify installation of the equipment, attend during testing and startup, and train the Owner's staff. Contractor shall coordinate times for the presence of the Manufacturer's representative with Manufacturer, Owner, and Engineer.

C. Handle carefully and protect the equipment and appurtenances to avoid damaging the equipment.

3.03 FIELD ACCEPTANCE TESTS

A. Turbo blowers furnished as part of this project shall be tested in accordance with Section 43 11 20, AIR FOIL BEARING TURBO BLOWERS.

B. The two relocated blowers shall be tested in accordance with this section.

C. Pre-operational checkout: Contractor shall assist Manufacturer's representative during the following:

1. Verification of equipment alignment
2. Pre-operation lubrication
3. Verification that all internal protective functions are operational
4. Manufacturer's recommendations for pre-start preparation and pre-operational checkout procedures.

D. Functional and Performance Test:

1. The Contractor, with the assistance of the blower Manufacturer's representative if applicable, shall perform functional and

performance tests on the blower equipment to demonstrate its operation to the satisfaction of the Owner and Engineer.

2. A test log shall be presented to the Engineer upon the completion of each test that records the following:

    a. Motor full load amperage for all motors.
    b. Any notes of irregularities noted during testing and how they were remedied.

END OF SECTION 43 05 50

AERZEN USA CORPORATION
108 Independence Way * Coatesville, PA 19320
Main Phone: 610-380-0244 * Fax: 610-380-0278

Letter of Transmittal

Company: City of Bullhead City Bullhead City, AZ 86439	**Transmittal #:** 01
	Date: 01/12/2022
Attn: Jason Mercer	**PO #:** 2022-00001861
Subject: Section 10 Wastewater Treatment Plant Aeration Basin Blowers	**Job #:** SO-21-00406

WE ARE SENDNG YOU

☐ Letter ☐ Purchase Order ☒ Submittal ☒ O&M Manual ☐ Other

DOCUMENT TYPE:
 # OF COPIES:

TRANSMITTED as checked below:

☐ For Approval
☒ **For RECORD**
☐ As Requested
☐ As Built
☐ Action Specified Below

Remarks:

Copy To: **Lisa Snyders / Coombs Hopkins**
Tom McCurdy / Aerzen

PROJECT MANAGER:

Clayton Houck
Tel: 484-784-9089
Mobile: 484-798-7669
Email: clayton.houck@aerzen.com

Signed: Clayton Houck

Submittal

Bullhead City, AZ
WWTP Section 10

Aeration Basin Blowers

Purchaser
City of Bullhead City
Bullhead City, AZ 86439

Local Representative
Coombs-Hopkins
Lisa Snyders
lisa@chcwater.com
602-275-4303

Manufacturer/Service/ Parts
Aerzen USA Corp.
108 Independence Way
Coatesville, PA 19320
800-444-1692 (tel)
610-380-0278 (fax)
www.aerzen.com/en-us

		SECTION 1 **Customer / Project Info** **Nameplate Data** **Cooling Data** **Critical Information / Notes** **Scope of supply** **GA Drawing** **P&ID** **Performance Data**
		SECTION 2 **Turbo Blower Brochure**
Customer: City of Bullhead City		**SECTION 3** **PM Motor** **Inverter** **Air Foil Bearing** **Impellar** **BOV** **Main Circuit Breaker**
Purchase Order: 2022-00001861		**SECTION 4** **Local Control Panel**
Project: Section 10 Wastewater Treatment Plant		**SECTION 5** **Harmonic Filter**
Aerzen Sales Order: SO-21-00406		**SECTION 6** **Accessory Cut Sheets**
		SECTION 7 **O&M Manual**
		SECTION 8 **Factory Testing**
		SECTION 9 **Pre-commissioning Checklist** **Startup Report**

SECTION 1

Aerzen USA Corporation
108 Independence Way – Coatesville, PA 19320
Tel: □6□0□380-0□44 Fa□: □6□0□380-0□□8
Ser□□□e □otl□□e □800□444-□6□□
e-□a□:Aer□e□□ Aer□e□□SA.□o□ we□s□te www.aer□e□□sa.□o□

Job Specific Data Package
for Aerzen Job # SO-21-00406

Date	Revision	Page
□/6/□0□□	-	□o□4

do□□o. T-6-0403

□□STOM□R □□FORMAT□O□

□□STOM□R	□t□o□B□ll□ead □t□
□□STOM□R □O □	□0□□-0000□86□
□RO□□□T □AM□	B□ll□ead □t□□A□ WWT□

□A□□A□□ D□S□R□□T□O□

T□RBO BLOW□R MOD□L □	AT□00-□.0S □ □□l□s
ORD□R □□A□T□T□	□
□□L□T T□□□	T□□□□B
D□S□R□□T□O□	R□MOT□ A□R □□TA□□ □ F□LT□R□ □□□□D TO T□□ BLOW□R
TOTAL □A□□A□□ W□□□□T	□□□4 l□s. □8□0 □□. □
ASS□MBL□ S□R□AL □o.	
MOTOR S□R□AL □o.	
□□□RT□R S□R□AL □o.	

DO□□M□□TAT□O□

□□□□RAL ARRA□□□M□□T DRAW□□□	□□□l□sT□r□o□T□□eB□□B-00□□□□-□00-□0□re□-
W□R□□□ D□A□RAM □o.	□B-00□8□□-□00
O□□RAT□O□S □ MA□□T□□A□□□ MA□□AL	OMTB-□□□-□0□0-□□
WARRA□T□ T□RMS □ □O□D□T□O□S	A□-00□-□SA

□AM□□LAT□ DATA

M□D□□M	A□	
FLOW RAT□	3□3□ □□□	□00 □ ^{3}/□ □□
D□S□□AR□□ □R□SS□R□	□□ □s□	□000 □ □ar
ROTAT□□□ S□□□D	36000 r□□	
RAT□D □OLTA□□ / FR□□ □□□□□	460 V / 3Φ / 60 Hz""	
MOTOR RAT□□□	□00 □□	□4□ □W
MA□□M□M LOAD □MOTOR□	□□4 A	
RAT□D □□RR□□T OF D□S□□	□30 A	□ 460 □""
□R□□T BR□A□□R RAT□□□	3□0 A	
□R□□T BR□A□□R AM□S □□T□RR□□T□□□ □A□A□□T□	6□ □A	
AMB□□□T T□M□□RAT□R□ RA□□□	-4 to +104	-20 to +40 ˚C
D□S□□AR□□ □O□□□□T□O□ S□□□	□0" □□0□A□S□FLA□□□	
□□L□T □O□□□□T□O□ S□□□	□6" □□0□A□S□FLA□□□	

Aerzen USA Corporation
108 Independence Way – Coatesville, PA 19320
Tel: 610-380-0444 Fax: 610-380-0438
Service Hotline 800-4AERZEN
e-mail: Aerzen@Aerzen-USA.com website: www.aerzen-usa.com

Job Specific Data Package
for Aerzen Job # SO-21-00406

Date	Revision	Page
06/10/14	-	1 of 4

Doc No. T-6-0403

GT 600 PACKAGE INSTALLATION

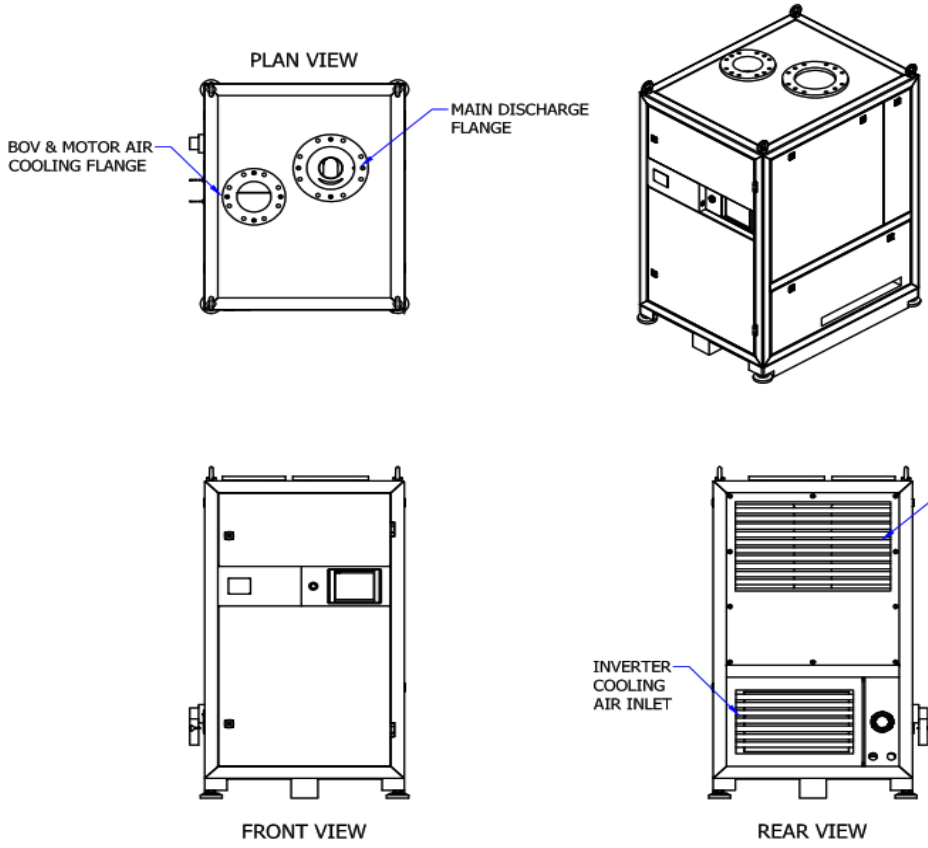

FLOW COOLING AIR

MOTOR	1810 CFM
INVERTER	**633** CFM

CABINET

AT600-10S 1015s

RATED POWER

600 HP

HEAT REJECTION AT DESIGN POINT

MOTOR	440	BTU/HR
INVERTER	**266**	BTU/HR

TERMINAL INFORMATION / NOTES

! Read complete operator's manual and all safety instructions before using this equipment. **!**

1 Transportation

- Blowers are shipped as a complete assembly while some components or attachments/disassembled could be delivered separately.
- A lower should be lifted with a crane or forklift.
- While lower is lifted with a crane straps should not be damaged or the painted surfaces should be protected.
- Unless otherwise specified all 4 EYE-BOLTS with holes or eyes for safety hooks must be used.

2 Storage within 120 days

- Products are stored where temperature and humidity is controllable, sealed areas for storage is not necessary.
- Penetration caps necessary for the watertight operation electrical connections must be removed.

3 Important safety regulations

- Do **not** modify components or structures for original operation and purpose.
- Do **not** evacuate intake filters during operation
- Do **not** exceed max. pressure or data plate..
- Do **not** close the main valve of operation during heated state.
- Do **not** perform any maintenance during operation.
- Electric current inside inverter is still alive for 10 minutes after machine stops.
- Electric current at lamps and displays of panel is still alive regardless of the status of the main breaker.
- Do **not** insert unauthorized current into control panel.
- All products should be performed according international electrical standard. Use the special type 3 procedure method

(Ground impedance : below 10Ω for 460V class).

4 Recommended working spaces

- Allow approximately 600 mm (24 inches) working space all four sides around the lower for operations and maintenance activities.

Aerzen USA Corporation
108 Independence Way – Coatesville, PA 19320
Tel: 6 0 380-0 44 Fa : 6 0 380-0 8
Ser e otl e 800 444- 6
e- a1 Aer e Aer e SA. o we s te www.aer e sa. o

Job Specific Data Package
for Aerzen Job # SO-21-00406

Date	Revision	Page
/6/ 0	-	4 o 4

do o. T-6-0403

S O OF S L

QTY	DESCRIPTION	REMARKS
	T r o Model AT 00- .0S s - o lete Asse l o s st o :	
	S eed M Motor	
	• bump air foil bearings	
	• impellers	
	• integrated motor cooling system	
	erter	
	los re	
	• integrated air filtration system	
	• Blow Off Valve	
	• BOV silencer	
	o trol S ste	
	• CPU	
	• LCP (MICOM control, Touch Screen)	
	• temperature and pressure sensors	
	ACCESSORIES/SPARES SHIPPED LOOSE (unless noted otherwise)	
	D s ar e a s o o t w/ 0" 0 A S FLA	-0044 6- 0
	B tter l solat o al e - 0	-00 4 - 0-0
	e al e - 0	-00 3- 0-0
	let a s o o t- 6	-0044 6- 6
	Motor ool / BO o e t o : 6 a s o o t	-0044 6-06
	Re ote F lter t w/ 6 Fla e	-004 4 - 6
	Set s o Re la e e t A F lter le e ts	-00 4
	ass e ar o F lter	-004634- 00
	o at o atewa **(installed)**	-0043 -
	Se s Foot la	-00 0
	ON SITE SERVICES	
	tr 3 da s: stallat o s e t o a d start	

NOTES:

1. TOLERANCE ON DIMENSIONS: ± 12 mm (0.5")
2. PACKAGE WEIGHT: 870 KG (1,914 LBS.)
3. CONNECTED PIPING TO BE INDEPENDENTLY SUPPORTED
4. LIFTING OF PACKAGE: WITH FORKLIFT FROM FRONT OR REAR OR VIA (4) EYEBOLTS, ONE IN EACH CORNER OF THE PACKAGE
5. REMOVABLE PANELS DO NOT EXCEED 20 KG. (45 LBS.)
6. ALLOW 1067mm (42") FREE SPACE FOR MAINTENANCE ON ALL FOUR SIDES.
7. CUSTOMER TO ENSURE INSTALLATION MEETS ALL NATIONAL AND LOCAL CODES.
8. AERZEN RECOMMENDS INSTALLATION OF A CHECK VALVE ADJACENT TO, AND DOWNSTREAM FROM THE EXPANSION JOINT AT THE DISCHARGE OF THE BLOWER WITH A DOWNSTREAM STRAIGHT RUN OF PIPE AT LEAST 3 TIMES THE PIPE DIAMETER.
9. INSTALLATION OF ALL ANCILLARY EQUIPMENT TO BE IN ACCORDANCE WITH THE PRODUCT IOM.

PLAN VIEW

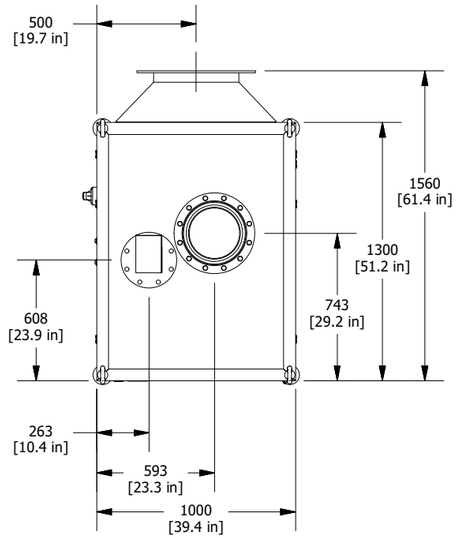

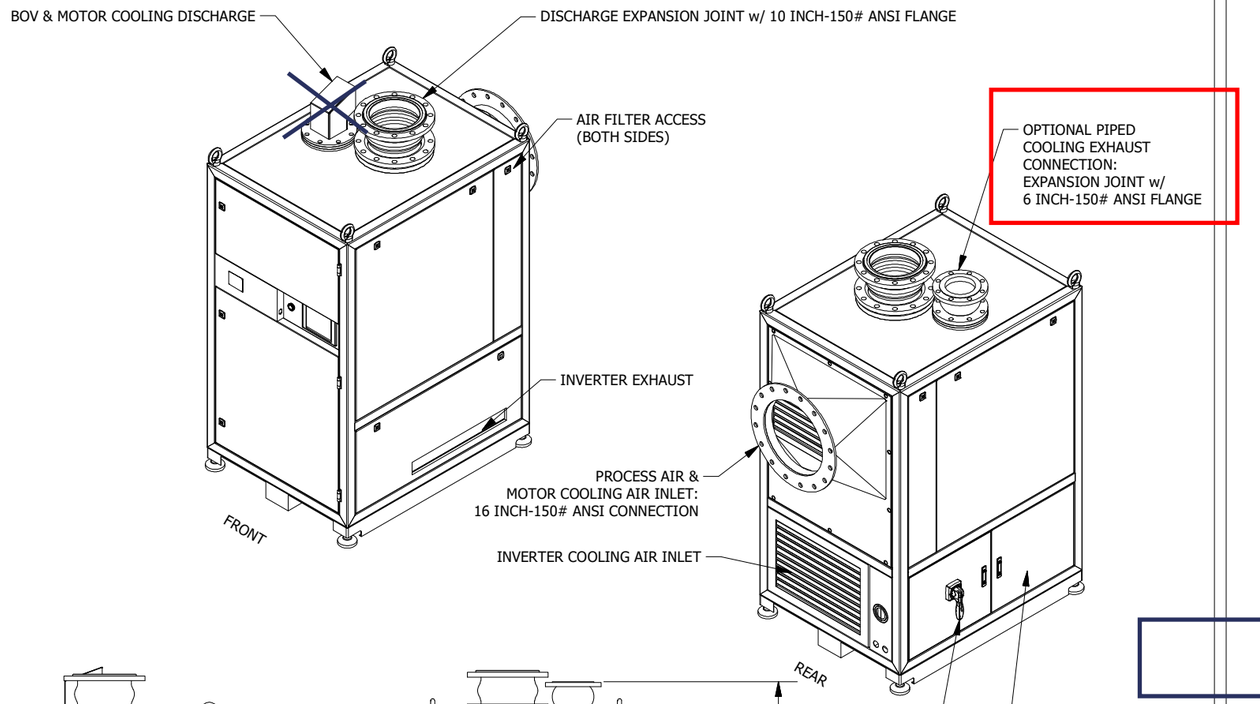

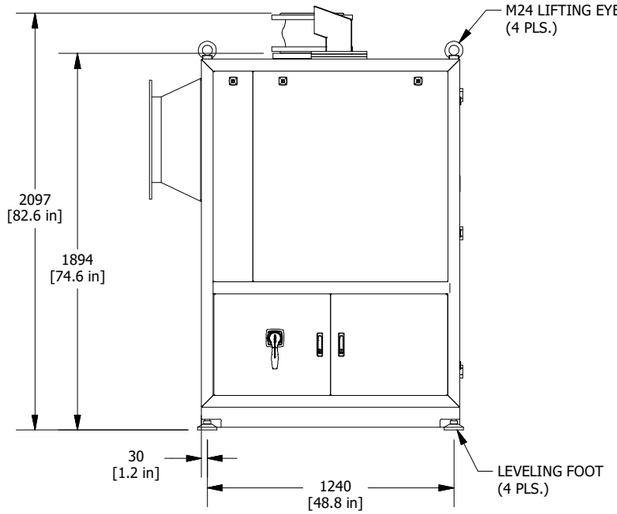

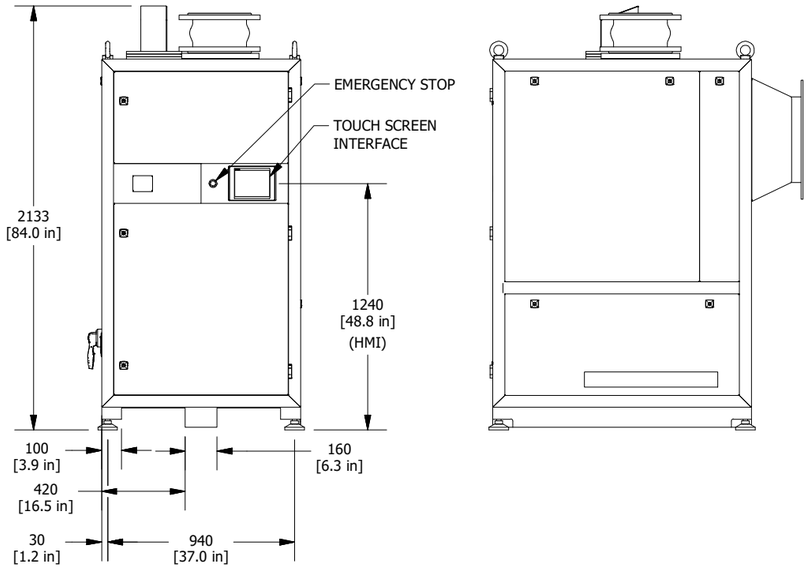

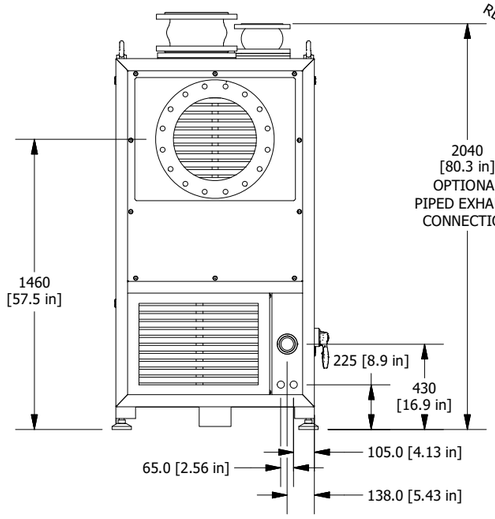

FRONT VIEW

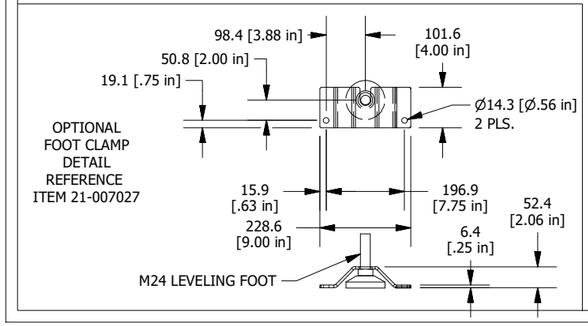

AERZEN

AERZEN USA CORPORATION
108 INDEPENDENCE WAY, COATESVILLE, PA.
PH: (610) 380-0244 FX: (610) 380-0278
WWW.AERZENUSA.COM

CLASS: I

	NAME	DATE
DRAWN	JPS	9/5/2019
CHECKED	DFT	9/6/2019
APPROVED		

SCALE: NTS | SHEET: 1 / 1

REV	NAME	DATE

TITLE
GENERATION G5plus TURBO BLOWER

AT200-1.0S
10"-150# ANSI DISCHARGE
16"-150# ANSI INLET

DRAWING NO.
GB-007722-200-10

NAVISION PN.
041-003219

NOTICE: THIS DRAWING AND ALL INFORMATION HEREIN IS THE PROPERTY OF AERZEN USA INC. AND ITS SUBSIDIARIES AND SHALL NOT BE REPRODUCED BY ANY MEANS IN WHOLE OF IN PART USED AS THE BASIS FOR MANUFACTURE WITHOUT WRITTEN PERMISSION

FROM CUSTOMER PIPING

Z1.2 Option

N1

×OPTIONAL×
INTAKE CONNECTION

Z2.1 Z3.1 Z4.1

TO CUSTOMER PIPING

N2

Z1.1

Options

×OPTIONAL×
DISCHARGE CONNECTION

Measurement	Signification
P0	Atmospheric pressure
P1	Inlet pressure
P2	Discharge pressure
P3	Pressure inside acoustic hood
TE1	Inlet temperature
TE2	Outlet temperature
TE3	Motor core temperature
TS	Temperature switch
HSI	Push button
HZ	Emergency stop push button

Air flow

Measurement line

Control line

Communication line

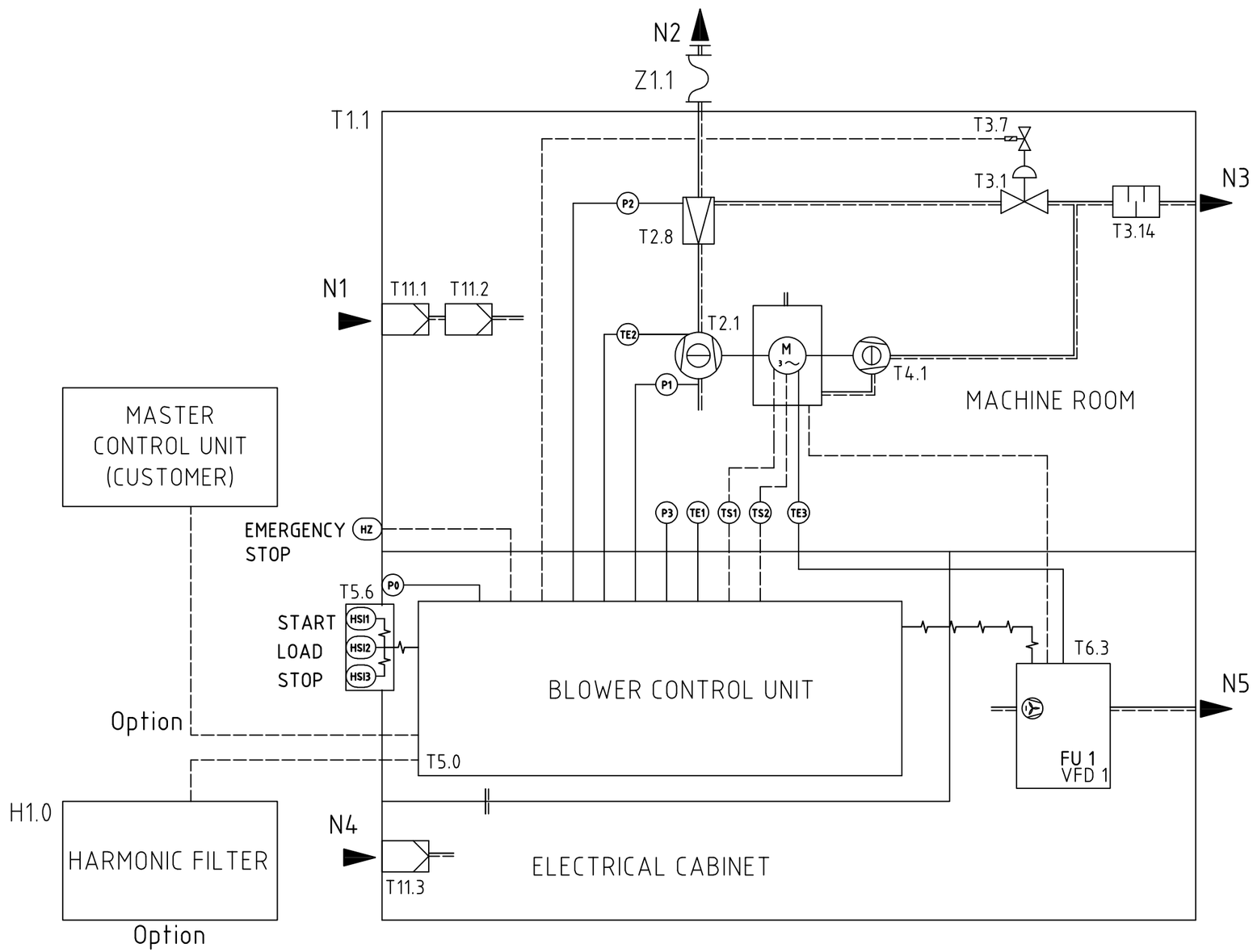

Pos.	Description
H1.0	Harmonic filter
Z4.2	Isolation valve
Z4.1	Isolation valve
Z2.1	Check valve
Z1.2	Intake expansion joint
Z1.1	Discharge expansion joint
T11.3	VFD cooling intake filter
T11.2	Main filter
T11.1	Pre-filter
T6.3	Turbo VFD
T5.6	Touch panel (HMI)
T5.0	Blower control unit
T4.12	Exhaust silencer
T4.1	Cooling impeller
T3.14	Exhaust silencer
T3.7	Solenoid valve
T3.1	Blow off valve (BOV)
T2.8	Cone diffuser
T2.1	Main turbo blower
T1.1	Sound enclosure

Symbol	Definition
N1	Conveying air inlet
N2	Conveying air outlet
N3	Blow off valve/cooling outlet
N4	VFD cooling air inlet
N5	VFD cooling air outlet

NOTICE:
THIS DRAWING AND ALL INFORMATION HEREIN IS THE PROPERTY OF AERZEN USA INC. AND ITS SUBSIDIARIES AND SHALL NOT BE REPRODUCED BY ANY MEANS IN WHOLE OR IN PART OR USED AS THE BASIS FOR MANUFACTURE WITHOUT WRITTEN PERMISSION.

AERZEN USA CORP.
108 Independence Way, COATESVILLE PA 19320
(610) 380-0244 PH, (610) 380-0278 FX

TITLE
PIPING AND INSTRUMENTATION DIAGRAM
AT25 / AT50 / AT75 / AT100 / AT150 / AT200
AERZEN TURBO GENERATION 5plus

DATE	DRAWN BY:	CHECKED BY:	P.M. APPROVAL:	SCALE:
09/25/2020	HP	JPS	–	MODEL SPACE 1 :1

DRAWING NO:	REVISION NO:	REVISION DATE:	SHEET:
WB-008062	–	MM/DD/YY	1/1

AERZEN USA CORPORATION
108 Independence Way
Coatesville, PA 19320
Tel. (610) 380-0244 ¨ Fax. (610) 380-0278

AERZEN

Reference Number: E16-58205.R2
Re: Bullhead City, AZ WWTP Section 10

6-Jan-22

Aeration Basin Blowers - In-Stock Turbo Option		**AT 200-1.0S G5plus**			
Performance Data (Per Blower):		**100%**	**80%**	**60%**	**34.7%**
Volume, handled at intake condition	icfm	3894	3115	2336	1350
Volume handled at normal condition	scfm	3552	2841	2131	1231
Relative humidity	%	20	20	20	20
Intake pressure (abs.)	psia	14.42	14.42	14.4200	14.420
Pressure difference	psig	9.6	9.6	9.6	10
Intake temperature	°F	104	104	104	104
Discharge temperature	°F	225	216	212	225
Rotor speed	rpm	35419	32426	30166	29024
Power consumption at shaft	BHP	187	139	101	65
Unit Power	kW	158.6	118.1	85.9	54.8
Tolerance on flow	± 5%				
Tolerance on power	± 5%				
motor rating	Hp	**200**			
Sound pressure level w/ enclosure	dB(A)	80			
measured in free field at 3ft. distance from					

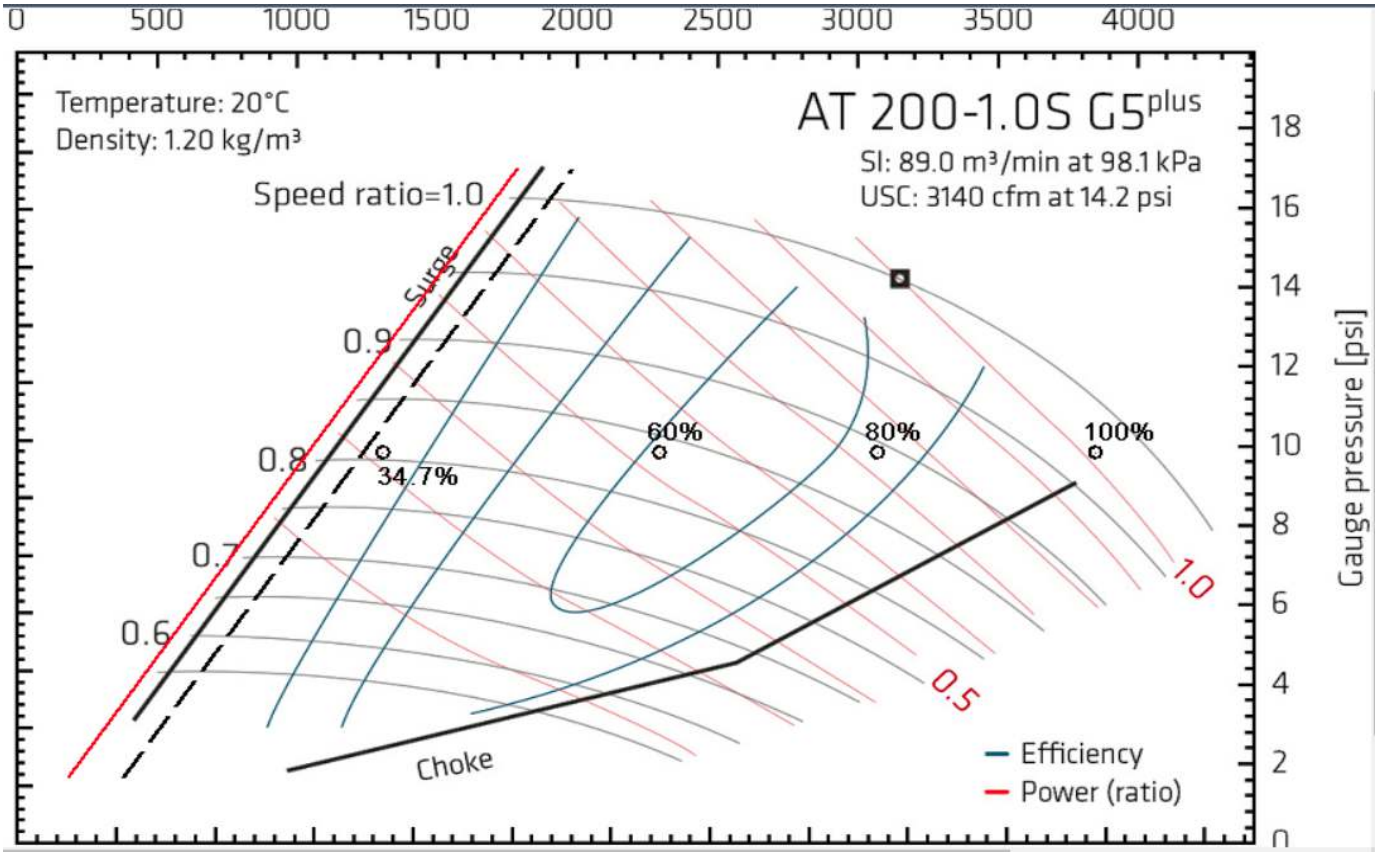

Confidential Proprietary - *This document shall not be distributed to anyone other than the intended recipients.*

SECTION 2

TURBO BLOWER

AERZEN TURBO G5 AND G5plus

Intake volume flows of 300 m³/h to 16,200 m³/h

AERZEN

TECHNOLOGY FROM AERZEN.
ALWAYS ONE INNOVATION AHEAD.

150 years of company history have become a rarity in a time of fiercely contested markets and increasingly strong competition. Today, AERZEN is one of the few family-owned companies that is well known for consistent quality and powerful innovations. The latest technology from AERZEN, turbo blowers of the Generation 5 and 5^{plus}, proves this once again with an impressive performance that sets new standards for reliability and energy efficiency.

AERZEN – visionary by tradition
Founded in 1864, Aerzener Maschinenfabrik is now a world leader in compressor technology. AERZEN positive displacement blowers, turbo blowers, and screw compressors have established themselves worldwide in the production industry for decades and are used in countless applications. A dedicated R&D department ensures that AERZEN technology constantly undergoes further development. Pioneering innovations developed by the department, such as Delta Hybrid, the world's first rotary lobe compressor, and the Aerzen Turbo with its air bearings, have exerted a major influence on technological progress. Exactly in line with the company's motto: 'Expect performance'.

Energy consumption: a key issue for the future
The problem of rising energy costs and dwindling resources is a more pressing concern for companies, researchers, and users today than ever before, because the requirements are incredibly high for future-proof technology that offers minimal energy consumption and high performance. The increasing scarcity of resources is another cause for concern. The highest energy costs are associated with basic industrial processes. All processes involving pumps and compressors, regardless of type, account for 30% of total energy costs – the highest percentage. This is reflected in wastewater treatment applications as well. The treatment of wastewater in aeration tanks consumes a whopping 60% to 80% of the total energy required by a wastewater treatment plant. It's high time to build a future based on technologies that stand for low energy costs and sustainability.

The perfect solution for every application
Back in 2010, AERZEN successfully introduced the innovative, air bearing turbo blower to the market. More than 1000 installations worldwide, do represent its high reliability, low energy and maintenance costs. The turbo blowers from AERZEN are used in a wide range of different applications, starting from oxygen supply in the biological process of wastewater treatment plants and the fermentation in yeast production, moving over to oxidation air for lime and cement production and many more...

THE AIR BEARING TURBO BLOWERS FROM AERZEN ARE PIONEERING WHEN IT COMES TO TURBO TECHNOLOGY.

MAXIMUM EFFICIENCY. PERFECTLY ATTUNED COMPONENTS.

AERZEN manufactures and develops all of its products via in-house production. The advantages are obvious. Only this direction can verify components that perfectly match to each other and can be ideally adapted to the operating process. The result is maximum durability, operational reliability, and cost-effectiveness. Absolutely flawless operation around the clock. And maximum productivity at reduced operating costs.

Designed for perfection: the impeller design.
What distinguishes a turbo impeller from an AERZEN turbo impeller? Basically everything. Take the design, for example. The Aerzen Turbo is the result of complex CFD-supported flow analyses. The shape of every impeller is optimally designed for the corresponding performance classes. As a result, AERZEN turbo impellers are significantly more effective than those that are just adjusted in a few parameters like the diameter. Another unique feature of AERZEN impellers is the material: stainless steel instead of aluminium. From a pure design standpoint, this material allows much better aerodynamics to be realised. Stainless steel is a win for efficiency, but also for durability and sustainably low life-cycle costs. That's because stainless steel is corrosion-resistant and practically abrasion-free.

Efficient, intelligent, and future oriented: The AERZEN frequency converter.
The innovation: AERZEN frequency converters based on multi-level topology. Because the converter power stage has a three-level structure, the DC-Link voltage per switching cycle can be halved. As a result, the heat loss in the drive motor is reduced to a minimum and the overall efficiency of the system is decisively improved. Another advantage is that the multi level design eliminates the need for an additional motor choke or a sine wave filter, that is required for standard frequency converters. Furthermore, the AERZEN frequency converter offers considerably faster performance, thanks to special high-rise-to-surge technology (active surge protection).

Compared to turbo blowers with standard converters, turbo assemblies from AERZEN are less sensitive to pressure fluctuations and more responsive. As a result, Aerzen Turbo assemblies can be operated far more stably throughout the entire turbo range, which also happens to be the basis for reliable combinations of positive displacement and turbo machines. All parameters are measured constantly to prevent compressor surge that can happen when unexpected pressure fluctuations occur. This makes the AERZEN frequency converter a decisive factor for operational reliability and energy efficiency.

The Aerzen Turbo impeller

Induction and PMS motor comparison

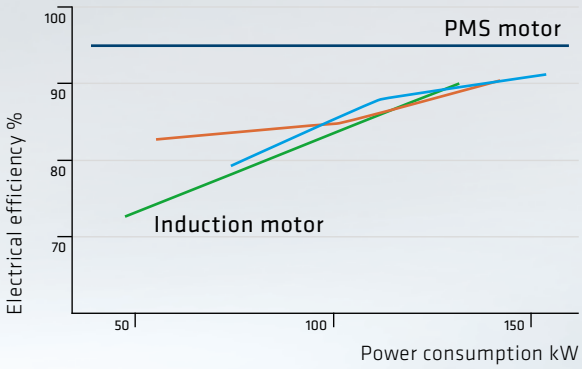

Innovation driver: the PMS motor.
A special motor drives the Aerzen Turbo. It's called a permanent magnet synchronous motor, or PMS motor for short. Its characteristics: Extremely efficient, energy-saving, highly innovative, and far superior to conventional motors. Because AERZEN developed this motor specifically for its turbos. Because the rotor doesn't require any additional energy for its magnetisation. Because, like the AERZEN frequency converter, it was designed to meet the special high frequency and response-time requirements of a turbo technology. And because this motor demonstrates exceptional performance and a high power density with an outstanding efficiency of 96%, even in partial load operation.

Radial bearing

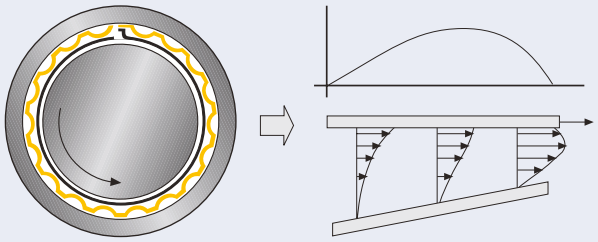

Thrust bearing

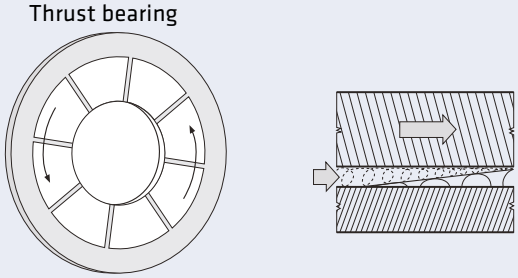

Capable of absorbing any pressure fluctuation: Air foil bearings for the PMS motor.
The AERZEN PMS motor comes equipped with air foil bearing. That has got a special reason. This technology, borrowed from the aerospace industry, is extremely simple in construction and convincing in function. A cushion of air is created as soon as the shaft begins to rotate. AERZEN has now taken this technology one decisive step further. The new, double-coated air foil bearings made of graphite and Teflon offer increased temperature resistance and a longer service life. Rather than the problems associated with magnetic bearing systems and standard air foil technology, this type of bearing offers numerous advantages:

- Uncomplicated, closed system
- Contact- and vibration-free operation
- Theoretical bearing lifetime of >80,000 operating hours, regardless of stop and start cycles (>80 starts/stops per hour)
- Non sensitive components to wear
- 100% maintenance- and oil-free
- Able to withstand even large-scale pressure variations (for example, in SBR processes and pulsations from positive displacement machines).

RELIABILITY, CONVENIENCE, AND TRANSPARENCY: THE TURBO CONTROL SYSTEM.

The reason why we chose to develop the hardware especially for our high-efficiency turbo rather than rely on a standard control system. The result is a fully integrated digital system. Highly functional. Convenient to use via touchscreen. And equipped with all the relevant interfaces, for example, to your SCADA system.

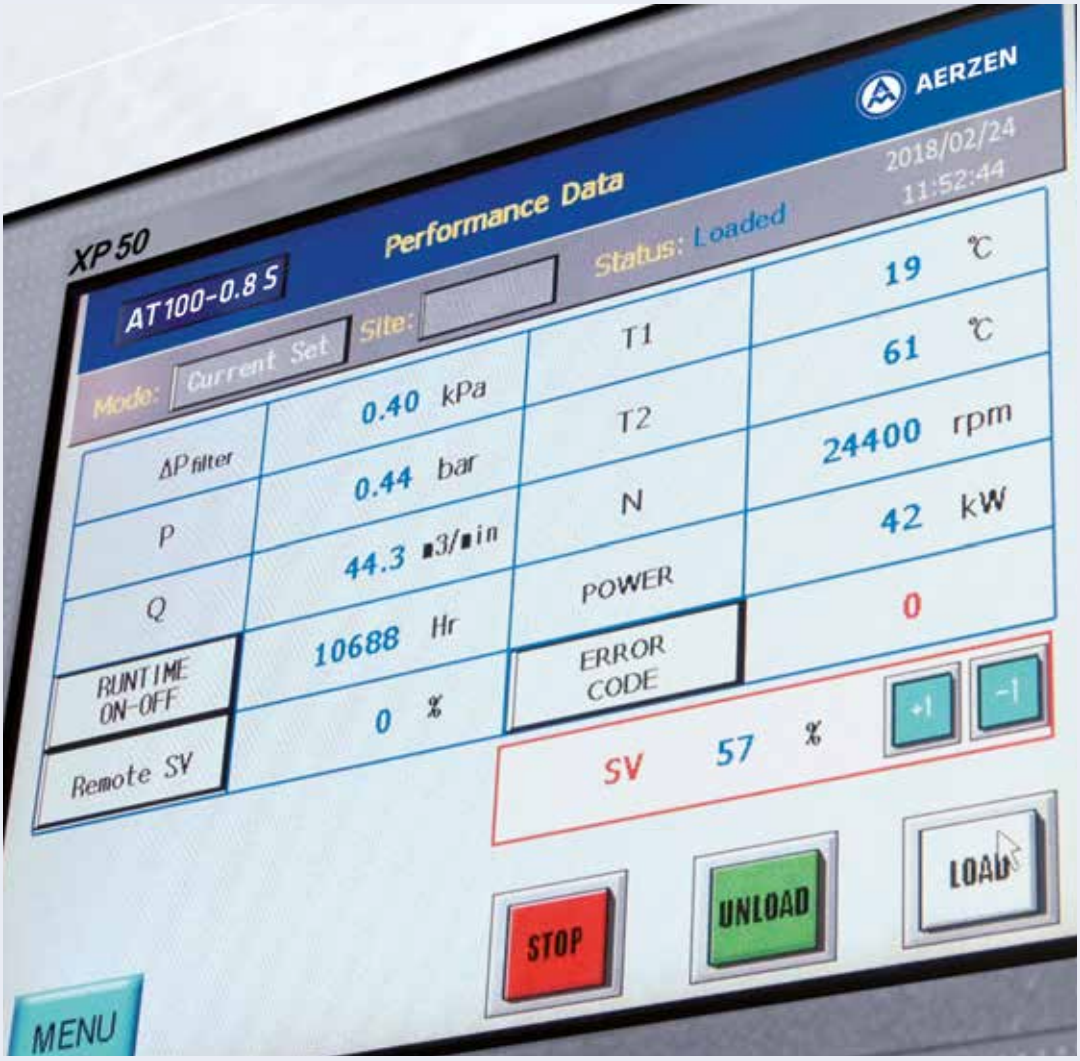

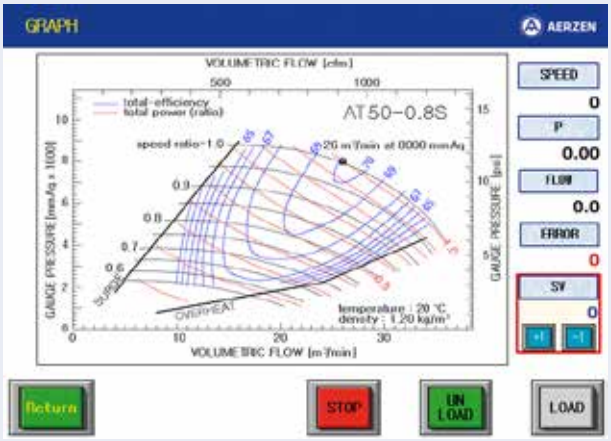

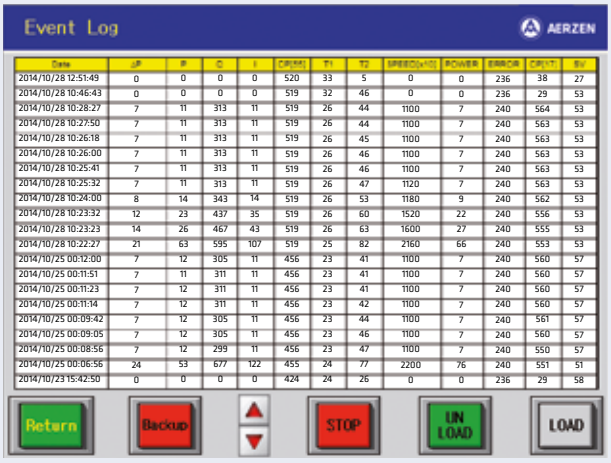

Real-time transparency:
The Aerzen Turbo control system integrates all the parameters of the turbo blower with the corresponding permissible minimal and maximal values (surge limit, maximal speed, overload, etc.):

- Differential pressure of the intake filter
- Differential pressure
- Volume flow
- Intake and discharge temperature
- Speed
- Electrical rating
- Operating hours
- Warnings, error codes, and error history
- Live visualisation inside the turbo perfamance map

Real volume flow measurement.
When it comes to high-performance, completely reliable plant operation, we're no fans of compromise. That's why with the Aerzen Turbo we don't take the conventional, indirect approach to measuring volume flow by deriving it from the blowers power consumption. We measure it for real based on the Venturi effect. To be precise, the actual volume flow is measured at the inlet cone based on measuring the generated differential pressure, through the intake air`s velocity. This approach is unrivalled and has decisive advantages. On the one hand, it means the assembly uses real values for its safety system, for example, the AERZEN feature High-Rise-to-Surge (active surge protection). On the other, you know at any time exactly what air quantities you're actually putting to your aeration tanks (this parameter is displayed for you directly via the software).

Convenient Turbo control system.
From comprehensive analysis tools and a multitude of security features to modern interfaces, the Aerzen Turbo control system leaves nothing to be desired.

Communication interfaces:
Profibus, Modbus, Ethernet IP, Profinet, direct connection to an oxygen probe and analogue signals (4-20 mA).

Safety features.

- Unique AERZEN ASP software (Automatic Surge Protection). Automatic control of blower speed when surge limits and critical operating ranges are reached
- Constant monitoring of all relevant operating parameters (for example, pressure, temperature, speed, etc.)

Analysis Tools.
Fault memory with operating values, trend curves, and data loggers for motor and frequency converters.

AERZEN TURBO G5.
THE PLUG & PLAY CONCEPT

Simply connect and start. It's that simple. After all, your Turbo package has already been fully configured at the factory and assembled, so that it is ready for connect and operate at installation site. Tailored to your exact process requirements, of course. Turbo convenience from day one. Typical of AERZEN. And one reason why the Turbo will be well received at your plant.

Ready to connect: the scope of supply in the standard version

1 **BOV (Blow OFF Valve)**
- For discharging the air during start-up and shut-down processes

2 **Process filter**
- Good accessibilty
- Filters are easy to change

3 **Cooling fan**
- Well suited and energy-efficient cooling of the main motor
- Optional use of the motor heat

4 **BOV silencer**
- Significant reduction of exhaust noise

5 **Frequency converter**
- Fully integrated, including line reactor for reducing circuit feedback
- With retractable cabinet and RFI filter (optional)

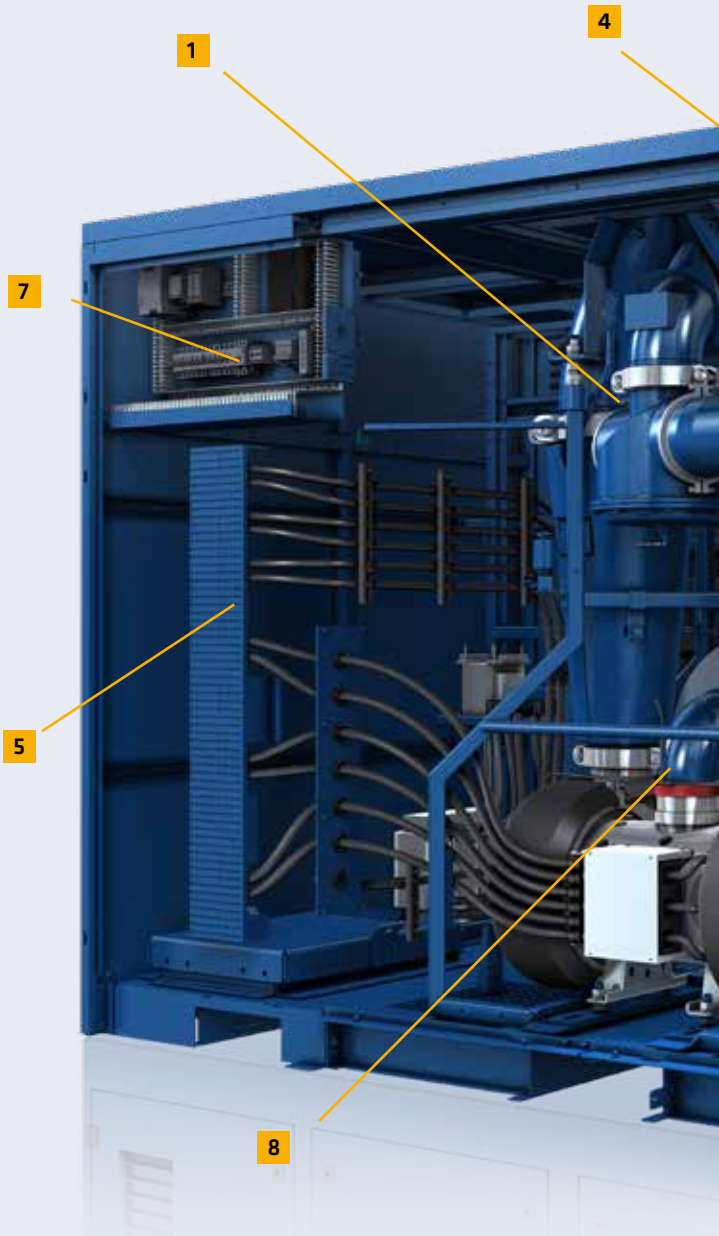

Perfect additions:
accessories, modifications, and extensions.

- Easy and cost-neutral conversion of machine room and ducted inlet
- Check valve optimised for reduced pressure loss
- Bellow type expansion joint with internal conduit tube
- Discharge silencer for reducing piping noise
- Transformer for 500 V - 700 V applications
- Special solutions for high ambient temperature > 45°C

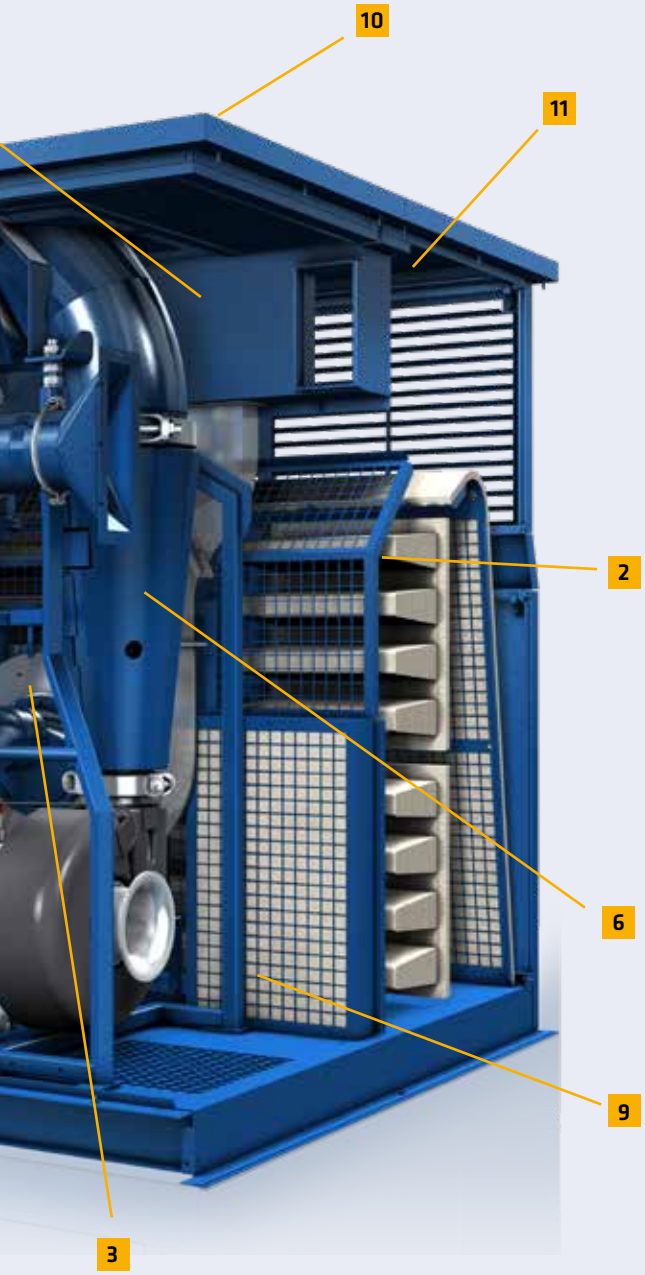

6 Cone diffuser
- Flow-optimised pressure generation

7 Aerzen Turbo control system
- Reliable, convenient, and transparent

8 Turbo motor
- Twin configuration, two blower stages on each shaft end
- Air foil bearing, impeller, and PMS motor
- With integrated airflow measurement

9 Intake silencer
- Flow-optimised and noise-reducing process airflow

10 Compensator (optional accessory)
- For stress-free connection of the piping on the discharge side

11 Optional
- Suction via inlet air duct

AERZEN TURBO G5^{plus}.

MORE COMPACT, MORE EFFICIENT, BETTER.

Again and again, AERZEN sets new records with its forward-looking solutions. A case in point is the new Turbo generation, Aerzen Turbo G5^{plus}. The Plus stands for more compactness, highest efficiency and durability. Aerzen Turbo G5^{plus}, the most compact and efficient Turbo in its class. Experience innovations that make all the difference. That's Turbo technology from AERZEN.

Ready to connect: the scope of supply in the standard version

1 **BOV (Blow OFF Valve)**
- For discharging the air during start-up and shut-down processes

2 **Process filter**
- Good accessibilty
- Filters are easy to change

3 **Motor cooling**
- Via an integrated fan impeller on the motor
- Optional use of waste heat

4 **BOV silencer**
- Significant reduction of exhaust noise

5 **Frequency converter**
- Fully integrated, including line reactor for reducing circuit feedback
- With RFI filter (optional)

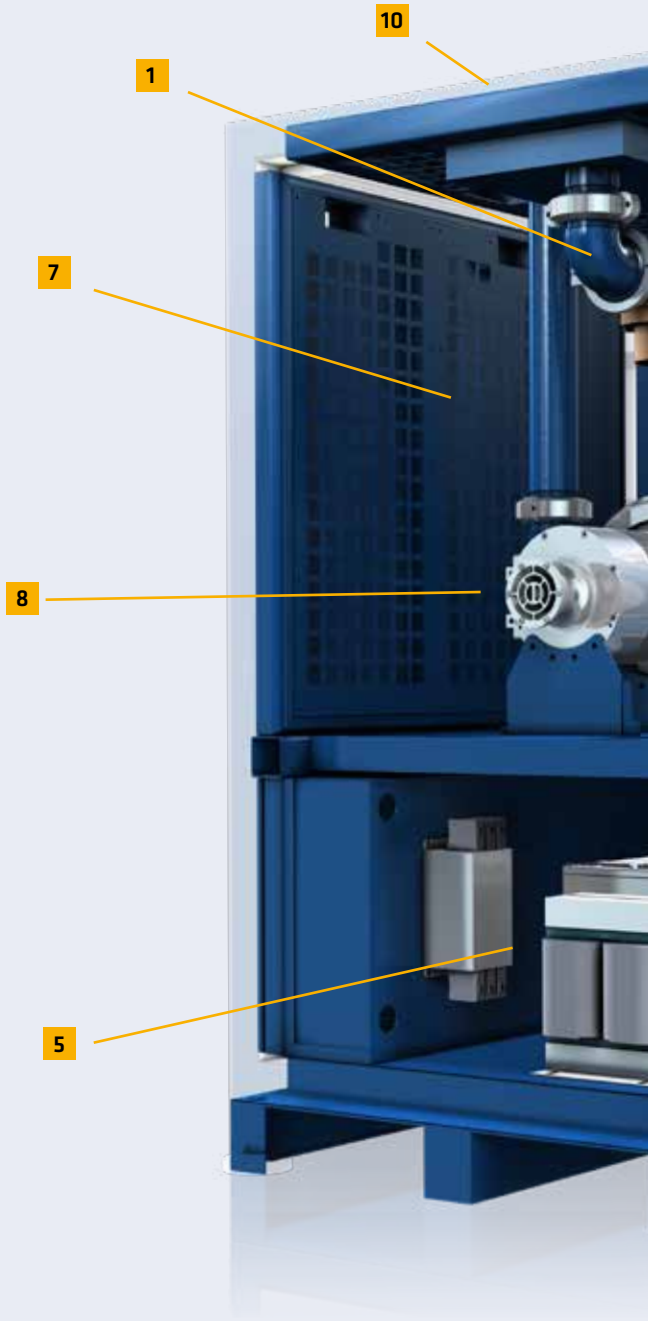

Perfect additions:
accessories, modifications, and extensions.

- Easy and cost-neutral conversion of channel inlet and piped inlet
- Check valve optimised for reduced pressure loss
- Bellow type expansion joint with internal conduit tube
- Discharge silencer for reducing piping noise
- Transformer for 500 V - 700 V applications
- Special solutions for high ambient temperature > 45°C

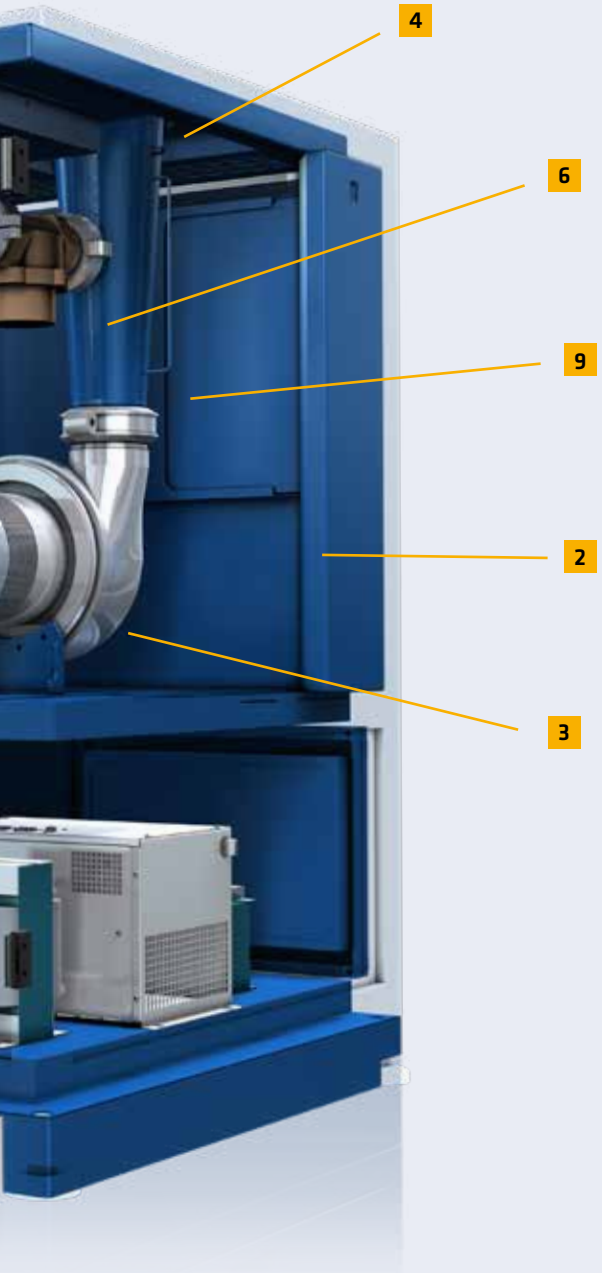

6 Cone diffuser

- Flow-optimised pressure generation

7 Aerzen Turbo control system

- Reliable, convenient, and transparent

8 Turbo motor

- Air foil bearing, impeller, and PMS motor
- With integrated airflow measurement

9 Intake silencer

- Flow-optimised and noise-reducing process air guiding

10 Compensator (optional accessory)

- For stress-free connection of the piping on the discharge side

THERE'S A LOT TO SAY ABOUT THE ECONOMICAL AERZEN TURBO.
WE'LL MAKE IT BRIEF HERE.

AERZEN has built turbo blowers since 1911. Over the years, we've continued to perfect these assemblies from a technological standpoint. Along the way, we've developed expertise that sets standards worldwide today. It's reflected in the performance characteristics, in every component, and in all the details of the newest Turbos. Discover the new Turbo Generation 5 and Generation 5^{plus}.

100% Turbo
- For small and large volume flows
- From 300 m³/h to 16,200 m³/h
- Speed-controled
- 100% oil-free

Efficient peak values
- Increase in energy efficiency by up to 10% compared to conventional turbo technology
- Control range of 40% - 100%
- Highly efficient individual components

Innovation driver: the permanent magnet motor
- Extremely high-efficiency and energy-saving permanent magnet motor
- Requires no additional energy to magnetise the rotor
- Outstanding efficiency of an almost constant 96%, even in partial load operation

Innovative AERZEN air foil bearings
- Forward-looking double coating made of Teflon and graphite
- Theoretical bearing lifetime of >80,000 operating hours, regardless of stop and start cycles (>80 starts/stops per hour)
- Resistant to pressure peaks (for example, SBR processes, pulsations caused by positive displacement machines) and compressor surge
- Highly functional without necessary accessories (for example, electric control system, back up bearings, auxiliary electronics such as battery systems), highly reliable operation even during voltage fluctuations and power supply failures.
- 100% maintenance free

Convenient Scope of supply
- Assembled and ready to connect
- Slight modifications for channel or piped inlets
- Diverse range of accessories

Direct volume flow measurement
- Real measurement based on the Venturi effect

New multi-level frequency converter (>55kW)
- High efficiency rating, up to 90% less power loss in the motor compared to conventional converter technology
- No need for a motor choke or sine wave filter
- Low temperature generation on the motor side, hence high reliability
- Consistent air cooling, expanded field of application for up to 50° ambient temperature
- Active surge protection (high-rise-to-surge) Speed control based on motor current
- Can be used reliably in combination with positive displacement machines

Convenient Turbo control system
- Integrated real-time transparency, display of all parameters, including live visualisation at the Turbo performance map.
- Real airflow measurement for increased transparency and operational reliability
- Advanced AERZEN 'Automatic Surge Protection' software, active surge protection via automatic speed control
- Universal interface

The impeller design
- High efficiency thanks to optimal design
- Improved aerodynamics, corrosion resistant and practically abrasion-free thanks to the use of stainless steel

Low space requirements
- Reduced dimensions: Existing blowers can be exchanged quickly and easily (series G5^{plus})
- Small machine room dimensions

Intelligently designed:
- Easy transport, installation, and commissioning
- Reduced sound pressure level, on average < 75 db(A)

EFFICIENCY HANDLED MATTER-OF-FACTLY.
THE TURBO IN NUMBERS.

Aerzen Turbo Generation 5^{plus} - performance data, dimensions, and weights

Blower size	Performance data					Dimensions and weights				
	Pressure max. mbar	Volume flow in m³/h min/max		Motor performance max. kW	Sound pressure level dB(A)	Length (L) mm	Width (W) mm	Height (H) mm	DN	Weight with hood kg
AT 25-0.8 G5^{plus}	800	360	900	20	72-75	800	1,040	1,500	100	550
AT 50-0.6 G5^{plus}	600	600	2,700	40	72-75	800	1,040	1,500	150	550
AT 50-0.8 G5^{plus}	800	600	1,900	40	72-75	800	1,040	1,500	150	550
AT 75-0.6 G5^{plus*}	600	900	3,900	60	73-76	1,000	1,300	1,900	200	680
AT 75-0.8 G5^{plus*}	800	900	2,900	60	73-76	1,000	1,300	1,900	200	680
AT 100-0.6 G5^{plus*}	600	1,200	5,100	80	73-76	1,000	1,300	1,900	250	680
AT 100-0.8 G5^{plus*}	800	1,200	3,900	80	73-76	1,000	1,300	1,900	200	680
AT 100-1.0 G5^{plus*}	1,000	1,400	3,000	80	73-76	1,000	1,300	1,900	200	680
AT 150-0.6 G5^{plus}	600	2,700	7,800	120	73-77	1,000	1,300	1,900	250	870
AT 150-0.8 G5^{plus}	800	1,800	5,400	120	73-77	1,000	1,300	1,900	250	870
AT 150-1.0 G5^{plus}	1,000	1,500	4,800	120	73-77	1,000	1,300	1,900	250	870
AT 200-0.8 G5^{plus}	800	2,700	8,400	150	73-77	1,000	1,300	1,900	250	870
AT 200-1.0 G5^{plus}	1,000	1,800	6,000	150	73-77	1,000	1,300	1,900	250	870

*(Data and dimensions non-binding. Subject to technical modifications) * In preparation*

Aerzen Turbo Generation 5 - performance data, dimensions, and weights

Blower size	Performance data					Dimensions and weights				
	Pressure max. mbar	Volume flow in m³/h min/max		Motor performance max. kW	Sound pressure level dB (A)	Length (L) mm	Width (W) mm	Height (H) mm	DN	Weight with hood kg
AT 300-0.6 G5	600	5,400	15,000	245	75-78	2450	2170	2105	500	2750
AT 300-0.8 G5	800	3,600	11,400	245	75-78	2450	2170	2105	400	2650
AT 300-1.0 G5	1,000	3,000	9,600	245	75-78	2450	2170	2105	400	2650
AT 400-0.8 G5	800	5,400	16,200	325	75-78	2450	2170	2105	500	2815
AT 400-1.0 G5	1,000	3,600	11,200	325	75-78	2450	2170	2105	500	2815

(Data and dimensions non-binding. Subject to technical modifications)

Right-sized is the magic word for efficient plant operation. The AERZEN Turbo assembly is available in different sizes. And for good reason. But that's just the starting point for perfectly designed Turbo technology. Ask the experienced experts from AERZEN.

SHOWING THEIR STRENGTHS.
BREAKDOWN OF TYPES FOR OPTIMAL PLANT CONFIGURATION.

Which Turbo assembly carries which load? You can find the answer in the breakdown of types, which we present here for the Aerzen Turbo. You can choose between 18 different assembly variants, depending on the pressure requirements and the volume flow.

The pressure and volume flow ranges for Generation 5

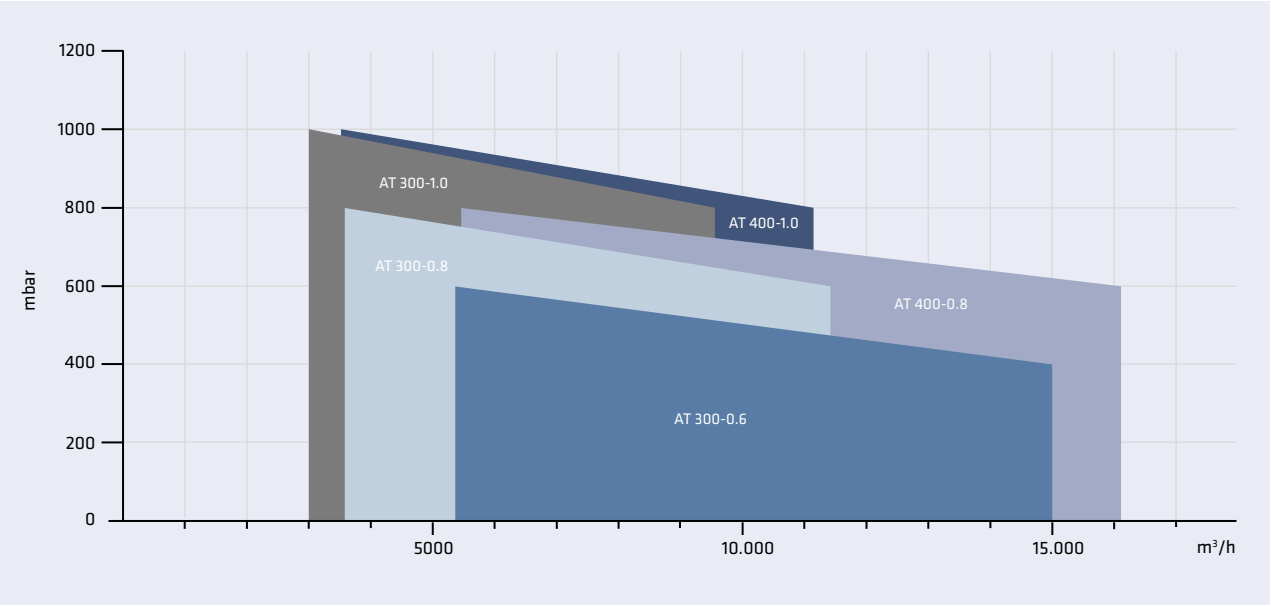

The pressure and volume flow ranges for Generation 5^{plus}

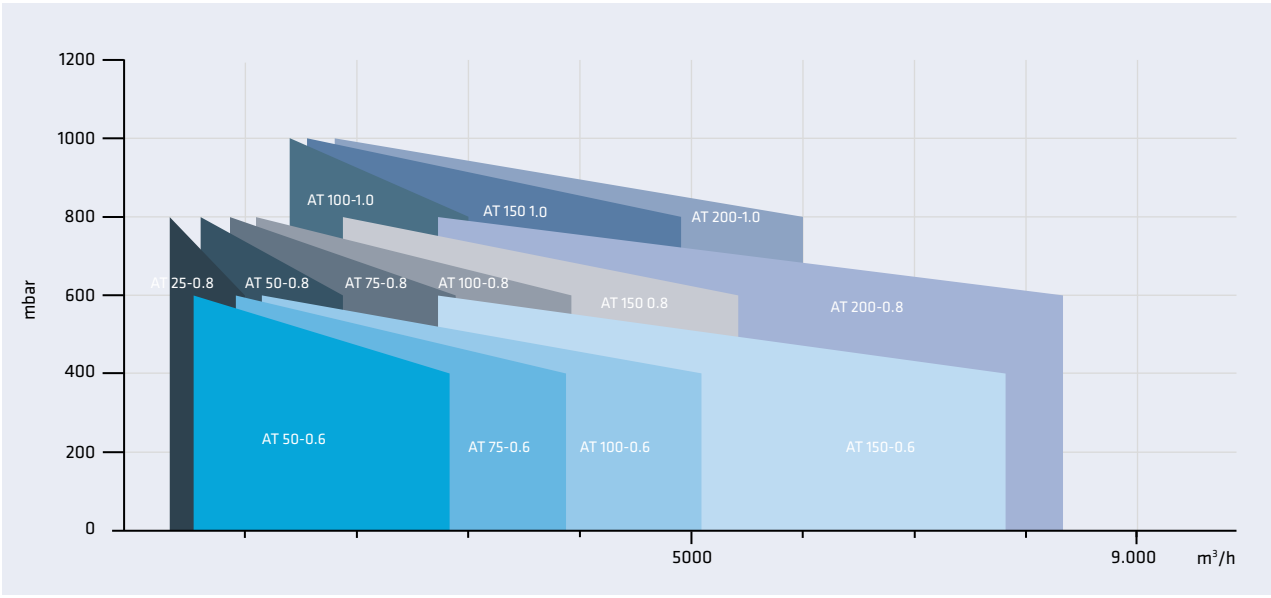

AERZEN TURBO. INNOVATIVE TECHNOLOGY FOR DIVERSE APPLICATIONS.

WELL ADVISED.
TECHNOLOGY FROM AERZEN.

We can support you as a plant operator in a lot more ways than just supplying top technological solutions. We can offer you all round spelling availability of our application know how, experience and expertise. Around the world, 24 hours a day, 7 days a week.

There for you when you need us – the world over. AERZEN.

952.783 hrs.

2.489.23

4.762.239

1.236.854 hrs.

3.256.489 hr

Service. When you need it, no matter where you are.
You need service – even when you don't need it. Our service teams will take care of your plant over its entire life cycle, helping to protect the value of your investment. We have created a close network that spans the globe: over 45 subsidiaries and representatives in more than 100 countries, so that we are never far from where you are. You can depend on it: one of our 100 service mechanics can be there for you quickly – if you should ever need one.

Security = AERZEN.
- commissioning by qualified experts
- individualized training for your in-house staff
- client-specific service and maintenance contracts
- remote maintenance system for your unit
- on-site service also available

Well prepared. Our application expertise.
There are 150 years of history behind our familiarity with a very wide range of compressor technology applications. And more than 25,000 configured waste water plants on every continent. A veritable treasure trove of experience. It is the basis for our unique expertise and innovation. And makes us valuable advisors for all your application questions. Take advantage of our knowhow when you want to equip your treatment plant both technically and economically for the coming decades.

37 hrs.
hrs.
s.

AERZEN. Compression - the key to our success.
AERZEN was founded in 1864 as Aerzener Maschinenfabrik. In 1868, we built Europe's first positive displacement blower. The first Turbo blowers followed in 1911, the first screw compressors in 1943, and in 2010 the world's first rotary lobe compressor package. Innovations "made by AERZEN" keep driving forward the development of compressor technology. Today, AERZEN is among the world's longest established and most significant manufacturers of positive displacement blowers, rotary lobe compressors, rotary piston gas meters, screw compressors, and Turbo blowers. AERZEN is among the undisputed market leaders in many areas of application.

At our 45 subsidiaries around the world, over 2,000 experienced employees are working hard to shape the future of compression technology. Their technological expertise, our international network of experts, and the constant feedback we get from our customers provide the basis for our success. AERZEN products and services set the standard in terms of reliability, stability of value and efficiency. Go ahead - challenge us!

Aerzener Maschinenfabrik GmbH
Reherweg 28 – 31855 Aerzen / Germany
Telephone: +49 5154 81 0 – Fax: +49 5154 81 9191
info@aerzener.de – www.aerzen.com

AERZEN
EXPECT PERFORMANCE

T1-015 – 01 – EN – 2000 – 04.2018

SECTION 3

DATASHEET
Aerzen Turbo MG5

Contents

1. HIGHLIGHTS 3

2. INTRODUCTION 3

3. INTENDED USE 3

4. STANDARDS AND REGULATIONS 3

5. MODELS 4

6. TECHNICAL DATA 4

7. MOTOR DIMENSION 5

8. MOTOR MATERIAL PROPERTIES 18

9. ELECTRICAL SPECIFICATION (at design point) 19

Revision history

Version	Contents	Rev Date
00	First issued	18 Apr 2019
01	Changed the document format of datasheet	30 Jun 2019
02	Revised the warning and shutdown temp. to Max. Allowable temp.	10 Jul 2019
03	Removed two standards (ISO 5389:2005, ASME PTC-10:2009)	12 Jul 2019

1. HIGHLIGHTS

- High-speed PMSM up to max. 67000rpm
- Oil-free and maintenance-free
- CFD-based stainless steel impeller
- Air cooling up to 400HP
- Double-layer-coated airfoil bearing
- Double-coated motor wire
- Optimized aero design
- Optimized cooling design
- Integrated thermal protection and monitoring sensor
- Space-saving design

2. INTRODUCTION

Aerzen Turbo MG5 motor assembly consists of high-speed PMSM (permanent magnet synchronous motor), stainless turbo impeller and airfoil bearing. Aerzen Turbo PMSM exclusively designed for Aerzen Turbo blowers can start with less than 10% of rated current and can reach up to speed of 67,000rpm quick with outstanding efficiency, almost constant even in partial load operation. Aerzen Turbo impeller directly driven by high-speed PMSM is made from SUS630 (17-4PH) stainless steel by precision die-casting using the lost-wax method under strict Aerzen quality control system and draws improved aerodynamics, nearly free of wear and corrosion resistant. The impeller blades which determine incredible high efficiency of Aerzen Turbo blowers are designed through 3D computational fluid dynamics numeric analysis by Aerzen technology. The hydrodynamic force produces the pressure gradient around the motor shaft so that the air foil bearing requires no mechanical contact between the shaft and journal bearing. Therefore, Aerzen Turbo air foil bearings establish 100% oil-free lubrication system and 100% free of maintenance. Theoretical service life of the air foil bearings are longer than 80,000 operating hours independent of start/stop cycles (> 80 starts/stops per hour).

3. INTENDED USE

Aerzen Turbo MG5 is designed exclusively for Aerzen Turbo blowers and must be used in Aerzen Turbo blower. Safety, performance, reliability, approval and warranty of Aerzen Turbo MG5 are guaranteed only for Aerzen Turbo blower application.

4. STANDARDS AND REGULATIONS

Aerzen Turbo MG5 complies with Machinery Directive 2006/42/EC and is evaluated according to

- EN ISO 12100:2010
- EN 60204-1/AC:2010
- EN 60034-1:2010
- NEMA MG1:2016

5. MODELS

Rating	Model	Item No.	Remark
25HP	AT25-0.8S MG5	041-011497	
	AT25-0.8S MG5-200V	041-011498	
50HP	AT50-0.6S MG5	041-011499	
	AT50-0.6S MG5-200V	041-011500	
	AT50-0.8S MG5	041-011501	
	AT50-0.8S MG5-200V	041-011502	
75HP	AT75-0.6S MG5	041-011436	AT100-0.8S MG5
	AT75-0.6S MG5-200V	041-011624	
	AT75-0.8S MG5	041-011504	
	AT75-0.8S MG5-200V	041-011505	
100HP	AT100-0.6S MG5	041-011493	
	AT100-0.6S MG5-200V	041-011492	
	AT100-0.8S MG5	041-011436	
	AT100-0.8S MG5-200V	041-011516	
	AT100-1.0S MG5	041-011494	
150HP	AT150-0.6S MG5	041-011436	AT200-0.8S MG5
	AT150-0.8S MG5	041-011496	
	AT150-1.0S MG5	041-011495	
200HP	AT200-0.8S MG5	041-011436	
	AT200-1.0S MG5	041-011496	
300HP	AT300-0.6T MG5	041-011620	
400HP	AT400-0.8T MG5	041-011437	
	AT400-1.0T MG5	041-011639	

6. TECHNICAL DATA

Manufacturer	AERZEN TURBO CO., LTD.
Motor Type	Permanent Magnet Synchronous Motor
Bearing Type	Air Foil Bearing
Main input voltage range	400Vac ~ 480Vac (3 Phase)
Input voltage rating to motor	350Vac ± 10% (Line to Line)
Drive	Integrated Variable Frequency Drive (Inverter)
Operating Range	20,000-50,000 RPM
Idle Speed	8,000-11,000 RPM
Cooling	Air cooled (By integral cooling impeller or separate fan motor)
Insulation	Epoxy coated, Class H
Stator Temperature Detector	Thermal protection in the stator windings (2 places) by PT1000 sensor
Max. Ambient Temperature	50°C
Poles	2

7. MOTOR DIMENSION

- **AT25-0.8S (Table 1)**

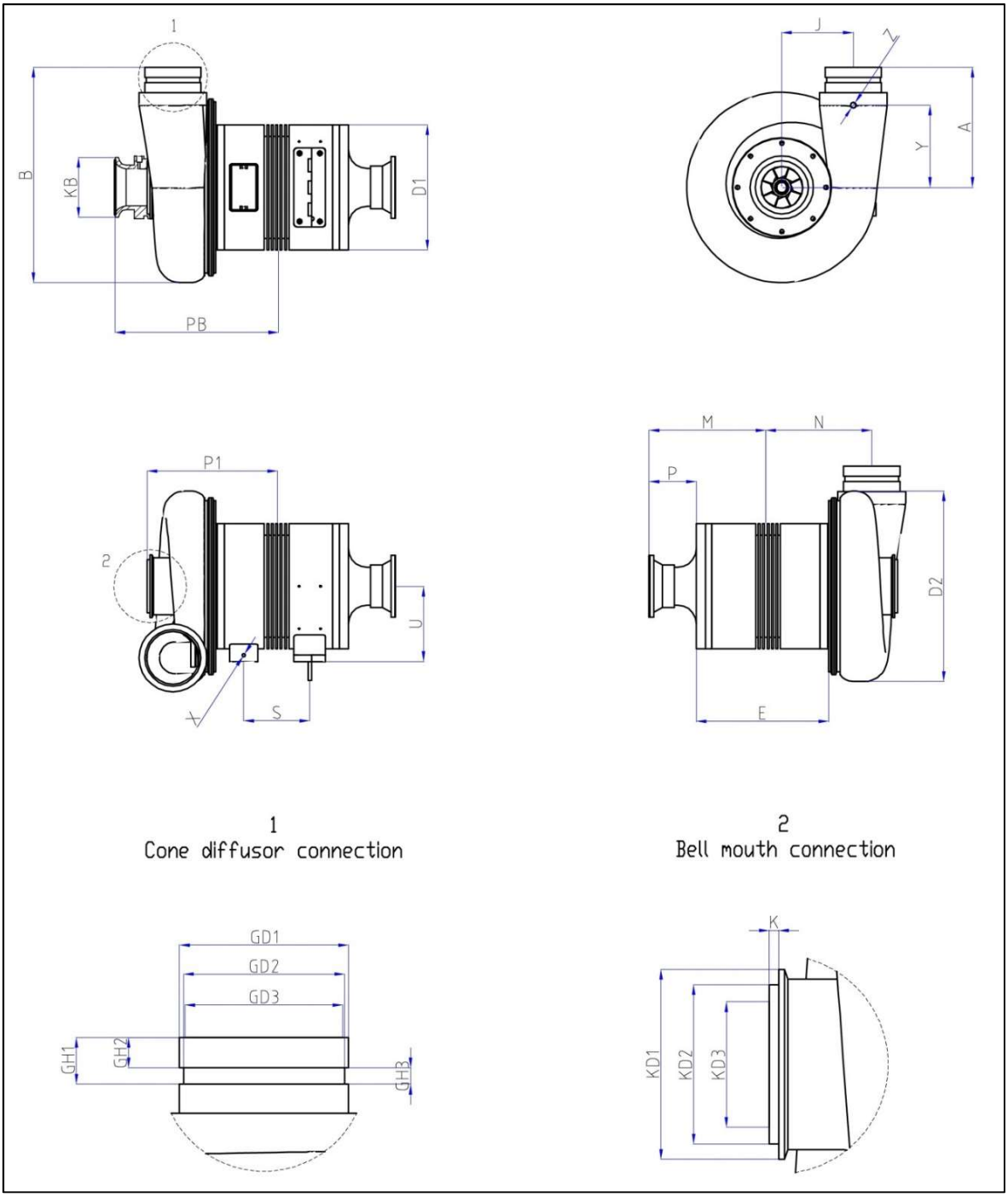

- **AT50-0.6S ~ AT100-1.0S (Table 1)**

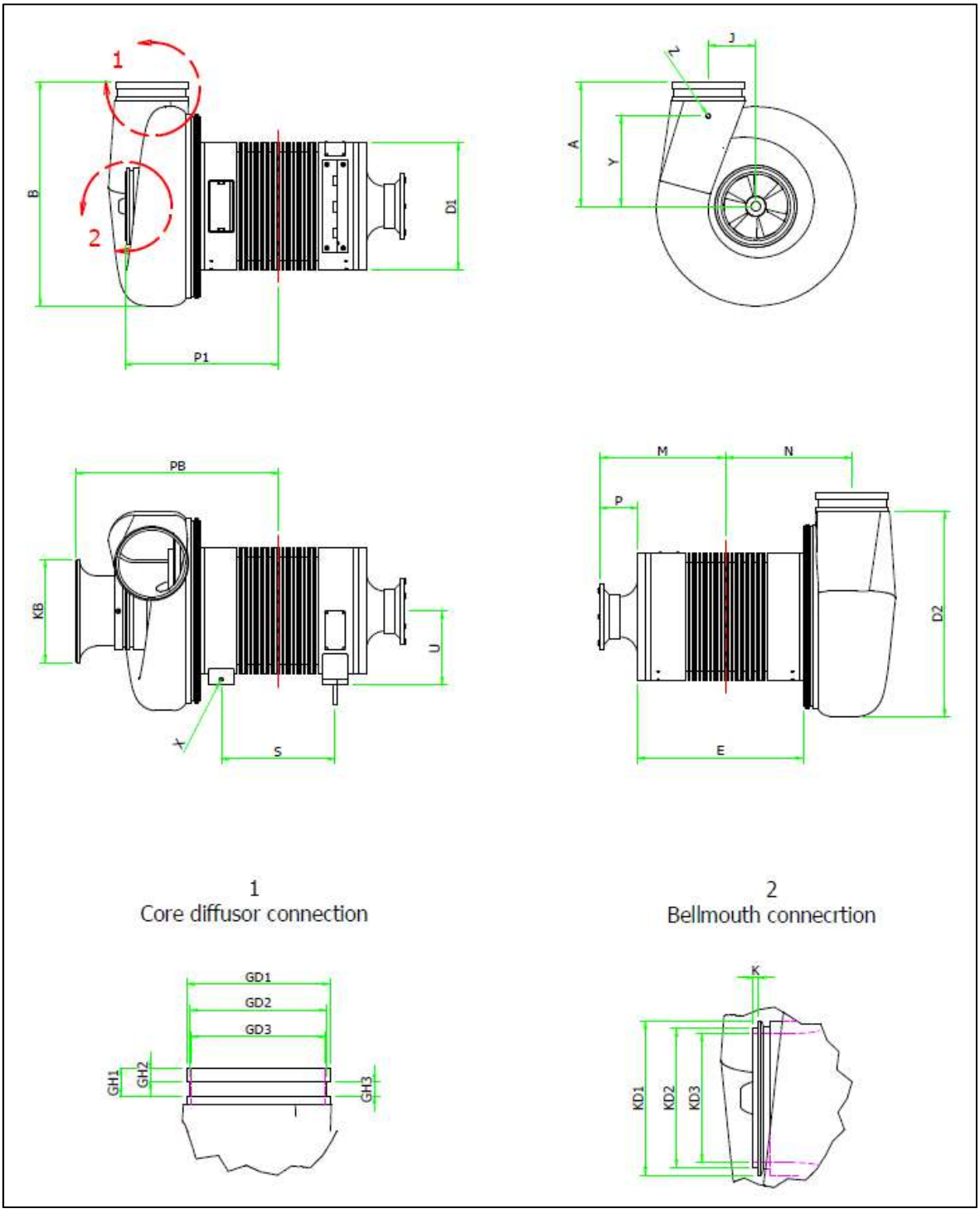

- **Table 1 MG5 Motor dimension data**

Model (MG5)	**AT25-0.8S**		**AT50-0.6S**		**AT50-0.8S**		**AT75-0.6S**	
Navision No.	**041-011497**		**041-011499**		**041-011501**		**041-011490**	
Unit	mm	inch	mm	inch	mm	inch	mm	inch
A	190	7.5	200.0	7.9	200.0	7.9	200.0	7.9
B	340.5	13.4	358.5	14.1	358.5	14.1	358.5	14.1
D1	198	7.8	198.0	7.8	198.0	7.8	198.0	7.8
D2	300.5	11.8	318.6	12.5	318.6	12.5	318.6	12.5
E	209.6	8.3	229.6	9.0	239.6	9.4	269.6	10.6
GH1	24.6	1.0	27.0	1.1	27.0	1.1	27.0	1.1
GH2	15.9	0.6	13.0	0.5	13.0	0.5	13.0	0.5
GH3	8.7	0.3	14.0	0.6	14.0	0.6	14.0	0.6
GD1	89.1	3.5	115.0	4.5	115.0	4.5	115.0	4.5
GD2	85	3.3	110.0	4.3	110.0	4.3	110.0	4.3
GD3	83.1	3.3	104.0	4.1	104.0	4.1	104.0	4.1
J	113.2	4.5	118.0	4.6	118.0	4.6	118.0	4.6
K	5	0.2	5.0	0.2	5.0	0.2	5.0	0.2
KD1	100	3.9	140.0	5.5	140.0	5.5	140.0	5.5
KD2	84	3.3	111.0	4.4	111.0	4.4	111.0	4.4
KD3	66	2.6	89.1	3.5	89.1	3.5	89.1	3.5
KB	105.6	4.2	131.2	5.2	119.2	4.7	161.5	6.4
M	185	7.3	193.7	7.6	200.0	7.9	205.3	8.1
N	167.4	6.6	208.3	8.2	214.5	8.4	239.2	9.4
P	74.6	2.9	74.6	2.9	74.6	2.9	74.6	2.9
P1	208.3	8.2	218.4	8.6	227.2	8.9	251.9	9.9
PB	264	10.4	284.6	11.2	288.4	11.4	330.4	13.0
S	102.5	4.0	120.0	4.7	162.5	6.4	162.5	6.4
U	119	4.7	119.0	4.7	119.0	4.7	119.0	4.7
X	M6	-	M6	-	M6	-	M6	-
Y	130	5.1	135.0	5.3	135.0	5.3	135.0	5.3
Z	-	PT 1/8	-	PT 1/8	-	PT 1/8	-	PT 1/8
Weight [Kg]	60		60		60		60	

- **Table 1 MG5 Motor dimension data (continue)**

Model (MG5)	**AT75-0.8S**		**AT100-0.6S**		**AT100-0.8S**		**AT100-1.0S**	
Navision No.	**041-011504**		**041-011493**		**041-011490**		**041-011494**	
Unit	mm	inch	mm	inch	mm	inch	inch	mm
A	200.0	7.9	241.0	9.5	200.0	7.9	7.9	241.0
B	358.5	14.1	435.0	17.1	358.5	14.1	14.1	435.0
D1	198.0	7.8	246.0	9.7	198.0	7.8	7.8	246.0
D2	318.6	12.5	387.8	15.3	318.6	12.5	12.5	387.8
E	269.6	10.6	293.0	11.5	269.6	10.6	10.6	293.0
GH1	27.0	1.1	27.0	1.1	27.0	1.1	1.1	27.0
GH2	13.0	0.5	13.0	0.5	13.0	0.5	0.5	13.0
GH3	14.0	0.6	14.0	0.6	14.0	0.6	0.6	14.0
GD1	115.0	4.5	139.8	5.5	115.0	4.5	4.5	139.8
GD2	110.0	4.3	133.3	5.2	110.0	4.3	4.3	133.3
GD3	104.0	4.1	130.0	5.1	104.0	4.1	4.1	130.0
J	118.0	4.6	101.0	4.0	118.0	4.6	4.6	101.0
K	5.0	0.2	5.0	0.2	5.0	0.2	0.2	5.0
KD1	140.0	5.5	125.3	4.9	140.0	5.5	5.5	125.3
KD2	111.0	4.4	135.0	5.3	111.0	4.4	4.4	135.0
KD3	89.1	3.5	150.0	5.9	89.1	3.5	3.5	150.0
KB	161.5	6.4	200.5	7.9	161.5	6.4	6.4	200.5
M	205.3	8.1	224.8	8.9	205.3	8.1	8.1	224.8
N	239.2	9.4	239.7	9.4	239.2	9.4	9.4	239.7
P	74.6	2.9	73.8	2.9	74.6	2.9	2.9	73.8
P1	251.9	9.9	290.2	11.4	251.9	9.9	9.9	290.2
PB	330.4	13.0	384.7	15.1	330.4	13.0	13.0	384.7
S	162.5	6.4	171.4	6.7	162.5	6.4	6.4	171.4
U	119.0	4.7	143.0	5.6	119.0	4.7	4.7	143.0
X	M6	-	M6	-	M6	-	-	M6
Y	135.0	5.3	176.0	6.9	135.0	5.3	5.3	176.0
Z	-	PT 1/8	-	PT 1/8	-	PT 1/8	PT 1/8	-
Weight [Kg]	60		100		60		115	

- **AT150-0.6S / AT200-0.8S (Table 2)**

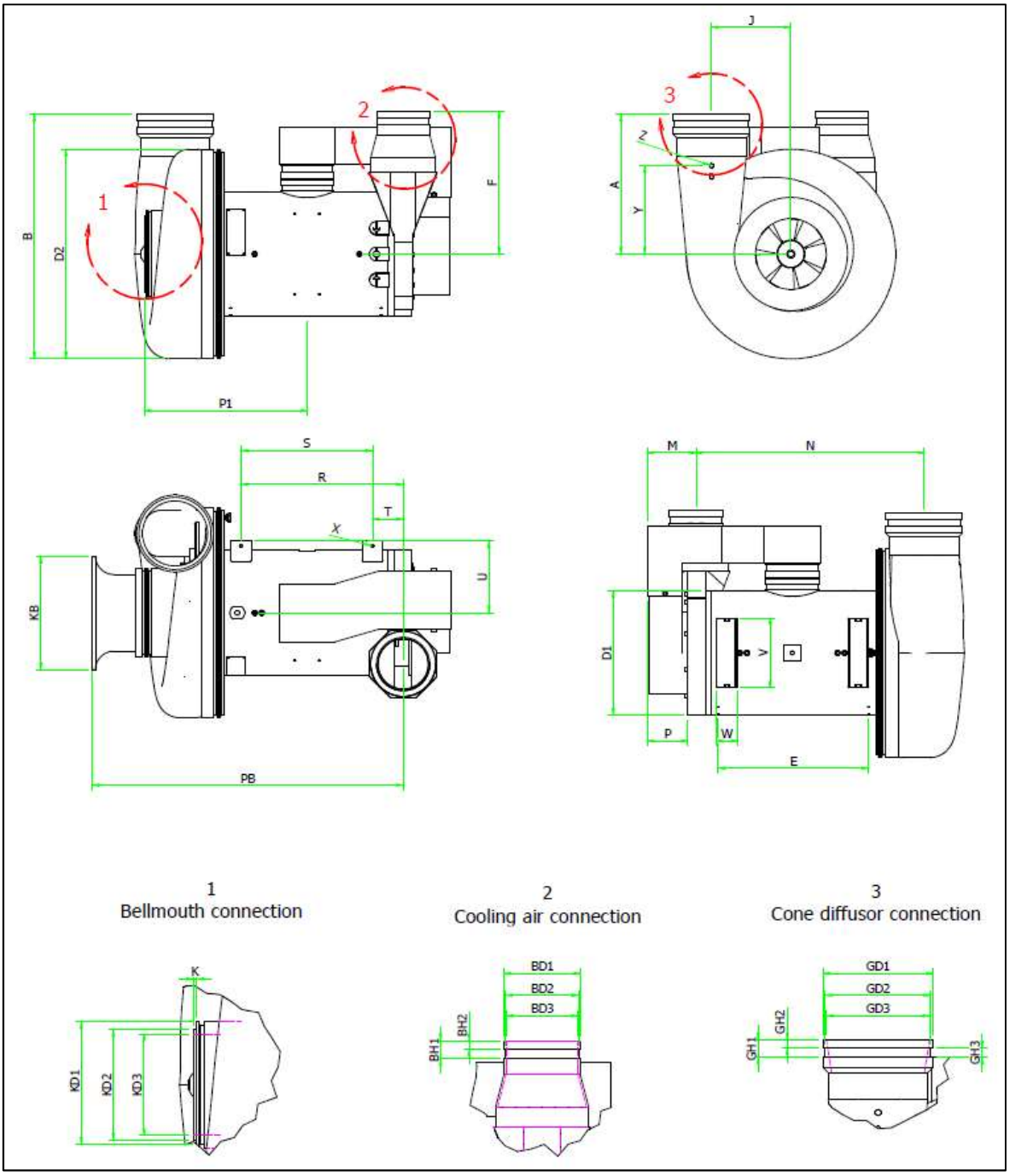

- **AT150-0.8S / AT150-1.0S / AT200-1.0S (Table 2)**

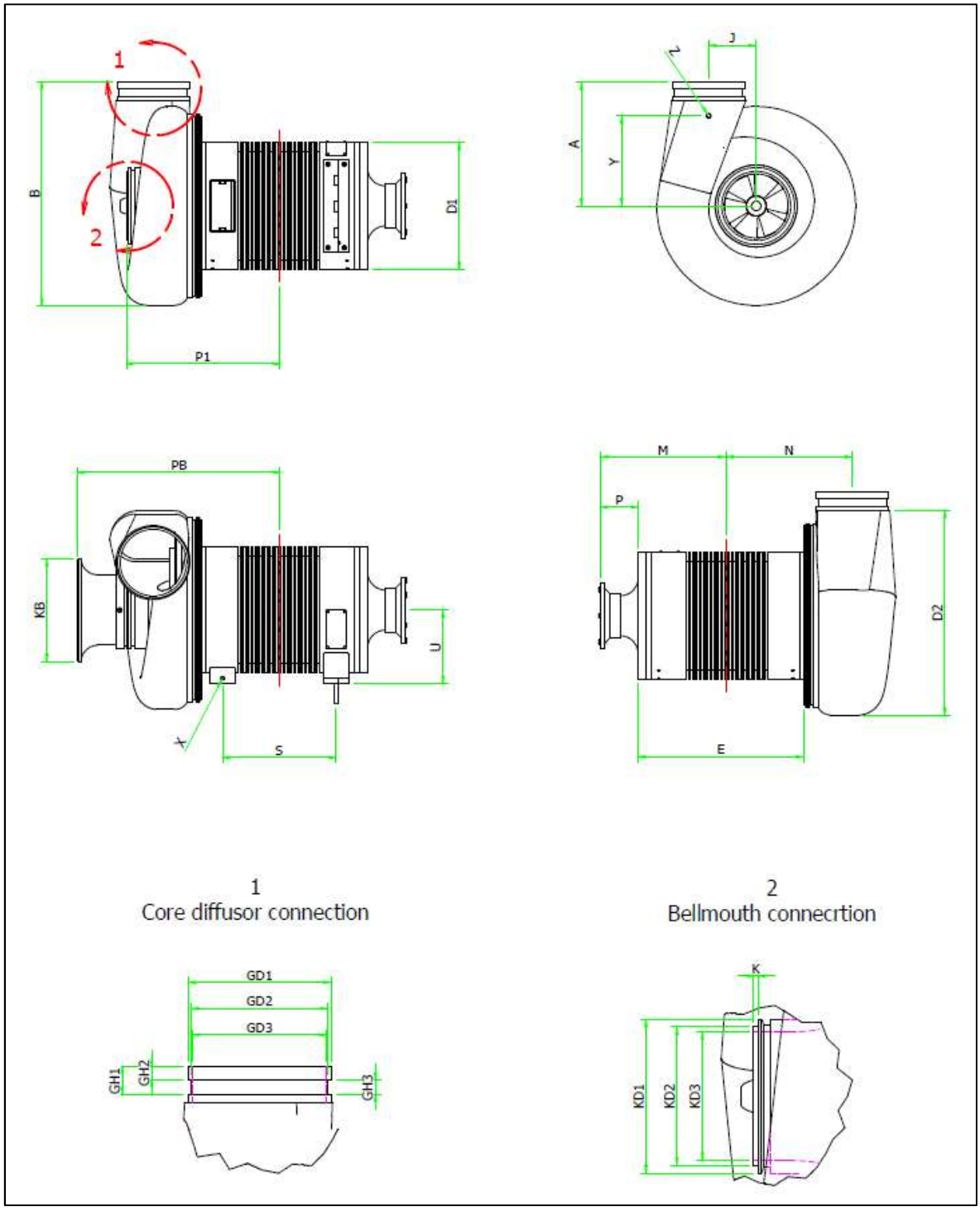

- **Table 2 MG5 Motor dimension data**

Model (MG5)	**AT150-0.6S**		**AT150-0.8S**		**AT150-1.0S**		**AT200-0.8S**		**AT200-1.0S**	
Navision No.	**041-011436**		**041-011496**		**041-011495**		**041-011481**		**041-011496**	
Unit	mm	inch	mm	inch	mm	inch	mm	inch	mm	inch
A	300	11.8	241	9.5	241	9.5	300	11.8	241	9.5
B	525.3	20.7	434.9	17.1	434.9	17.1	525.3	20.7	434.9	17.1
D1	268	10.6	246	9.7	246	9.7	268	10.6	246	9.7
D2	450.6	17.7	399.9	15.7	399.9	15.7	450.6	17.7	399.9	15.7
E	324	12.8	323	12.7	323	12.7	324	12.8	323	12.7
F	306.1	12.1	-	-	-	-	306.1	12.1	-	-
BH1	27	1.1	-	-	-	-	27	1.1	-	-
BH2	13	0.5	-	-	-	-	13	0.5	-	-
BH3	14	0.6	-	-	-	-	14	0.6	-	-
BD1	114.3	4.5	-	-	-	-	114.3	4.5	-	-
BD2	110.8	4.4	-	-	-	-	110.8	4.4	-	-
BD3	108.3	4.3	-	-	-	-	108.3	4.3	-	-
GH1	27	1.1	27	1.1	27	1.1	27	1.1	27	1.1
GH2	13	0.5	13	0.5	13	0.5	13	0.5	13	0.5
GH3	14	0.6	14	0.6	14	0.6	14	0.6	14	0.6
GD1	165.2	6.5	139.8	5.5	139.8	5.5	165.2	6.5	139.8	5.5
GD2	158.6	6.2	133.3	5.2	133.3	5.2	158.6	6.2	133.26	5.2
GD3	155.5	6.1	130	5.1	130	5.1	155.5	6.1	130	5.1
J	170.7	6.7	92.6	3.6	92.6	3.6	170.7	6.7	92.6	3.6
K	5	0.2	5	0.2	5	0.2	5	0.2	5	0.2
KD1	184.4	7.3	150	5.9	150	5.9	184.4	7.3	150	5.9
KD2	166	6.5	135	5.3	135	5.3	166	6.5	135	5.3
KD3	152.2	6.0	125.3	4.9	110.4	4.3	152.2	6.0	125.3	4.9
KB	243.5	9.6	200.5	7.9	176.6	7.0	243.5	9.6	200.5	7.9
M	104.1	4.1	244.8	9.6	244.8	9.6	104.1	4.1	244.8	9.6
N	490.7	19.3	247.2	9.7	247.2	9.7	490.7	19.3	247.2	9.7
P	85.9	3.4	73.8	2.9	73.8	2.9	85.9	3.4	73.8	2.9
P1	349.7	13.8	300.2	11.8	300.2	11.8	349.7	13.8	300.2	11.8
PB	668.6	26.3	394.7	15.5	384.9	15.2	668.6	26.3	394.7	15.5
R	348.8	13.7	-	-	-	-	348.8	13.7	-	-
S	283	11.1	221.6	8.7	221.6	8.7	283	11.1	221.6	8.7
T	65.8	2.6	-	-	-	-	65.8	2.6	-	-
U	154	6.1	143	5.6	143	5.6	154	6.1	143	5.6
V	150	5.9	-	-	-	-	150	5.9	-	-
W	45	1.8	-	-	-	-	45	1.8	-	-
X	M6	-	M6	-	M6	-	M6	-	M6	-
Y	190	7.5	176	6.9	176	6.9	190	7.5	176	6.9
Z	-	PT 1/8	-	PT 1/8	-	PT 1/8	-	PT 1/8	-	PT 1/8
Weight [Kg]	140		100		100		140		100	

- **AT300-0.6T / AT400-0.8T / AT400-1.0T (Table 3)**

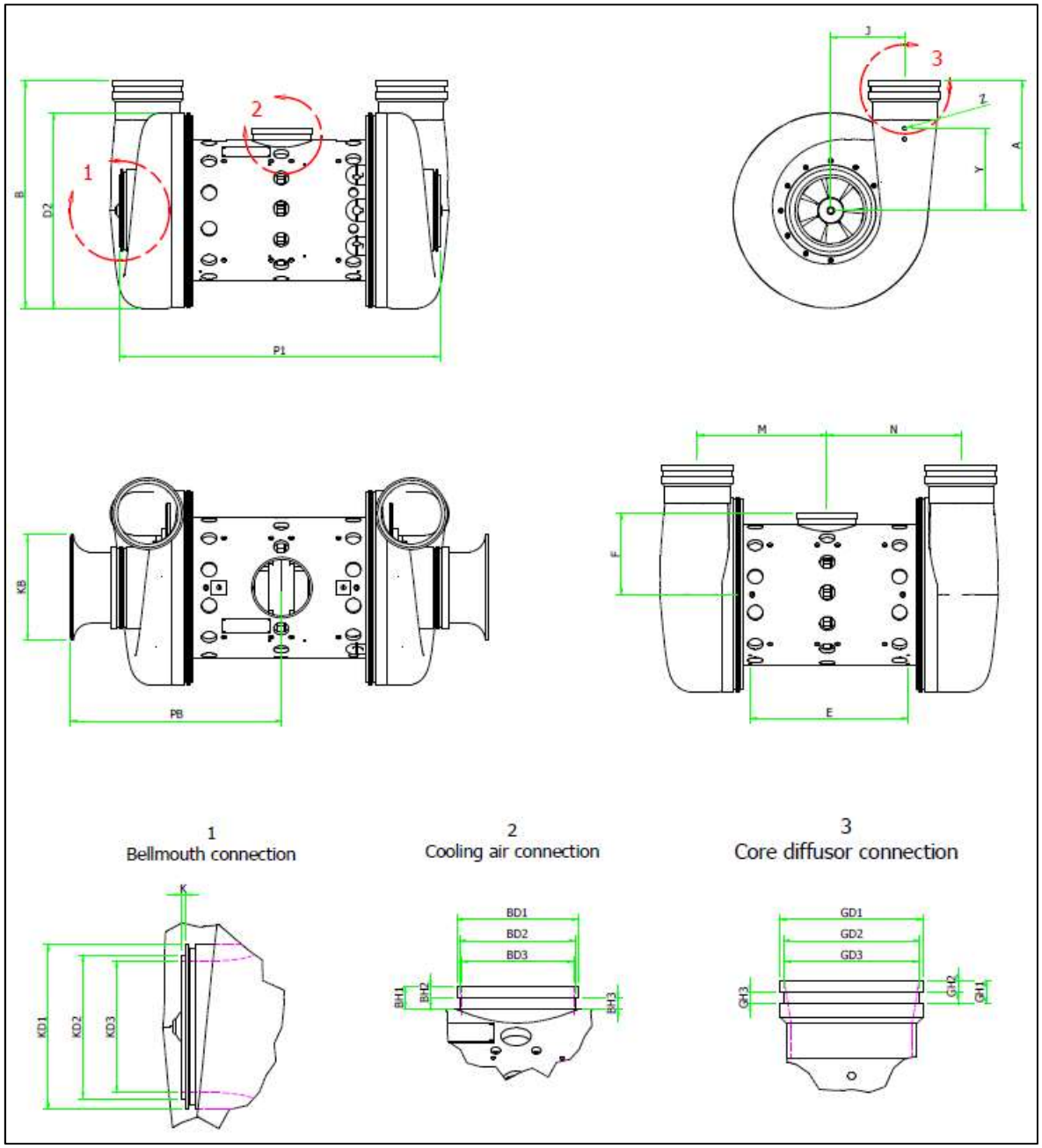

- **Table 3 MG5 Motor dimension data**

Model (MG5)	**AT300-0.6T**		**AT400-0.8T**		**AT400-1.0T**	
Navision No.	**041-011620**		**041-011437**		**041-011639**	
Unit	mm	inch	mm	inch	mm	inch
A	300	11.8	300	11.8	300	11.8
B	525.3	20.7	525.28	20.7	525.3	20.7
D1	324	12.8	324	12.8	324	12.8
D2	450.6	17.7	450.58	17.7	450.6	17.7
E	365	14.4	365	14.4	301	11.9
F	188	7.4	188	7.4	188	7.4
BH1	25	1.0	25	1.0	25	1.0
BH2	13	0.5	13	0.5	13	0.5
BH3	12	0.5	12	0.5	12	0.5
BD1	139.8	5.5	139.8	5.5	139.8	5.5
BD2	133.3	5.2	133.26	5.2	133.3	5.2
BD3	130.1	5.1	130.1	5.1	130.1	5.1
GH1	27	1.1	27	1.1	27	1.1
GH2	13	0.5	13	0.5	13	0.5
GH3	14	0.6	14	0.6	14	0.6
GD1	165.2	6.5	165.2	6.5	165.2	6.5
GD2	158.7	6.2	158.7	6.2	158.7	6.2
GD3	139.8	5.5	139.8	5.5	139.8	5.5
J	170.7	6.7	170.7	6.7	170.7	6.7
K	5	0.2	5	0.2	5	0.2
KD1	190	7.5	190	7.5	150	5.9
KD2	166	6.5	166	6.5	135	5.3
KD3	152.2	6.0	152.2	6.0	125.3	4.9
KB	243.5	9.6	243.5	9.6	200.5	7.9
M	300.6	11.8	300.6	11.8	261.7	10.3
N	308.6	12.1	308.6	12.1	270.8	10.7
P1	740.9	29.2	740.9	29.2	637.4	25.1
PB	482.5	19	482.5	19	413.2	16.3
Y	165	6.5	165	6.5	165	6.5
Z	-	PT 1/8	-	PT 1/8	-	PT 1/8
Weight [Kg]	260		260		190	

- **AT25-0.8S-200V (Table 4)**

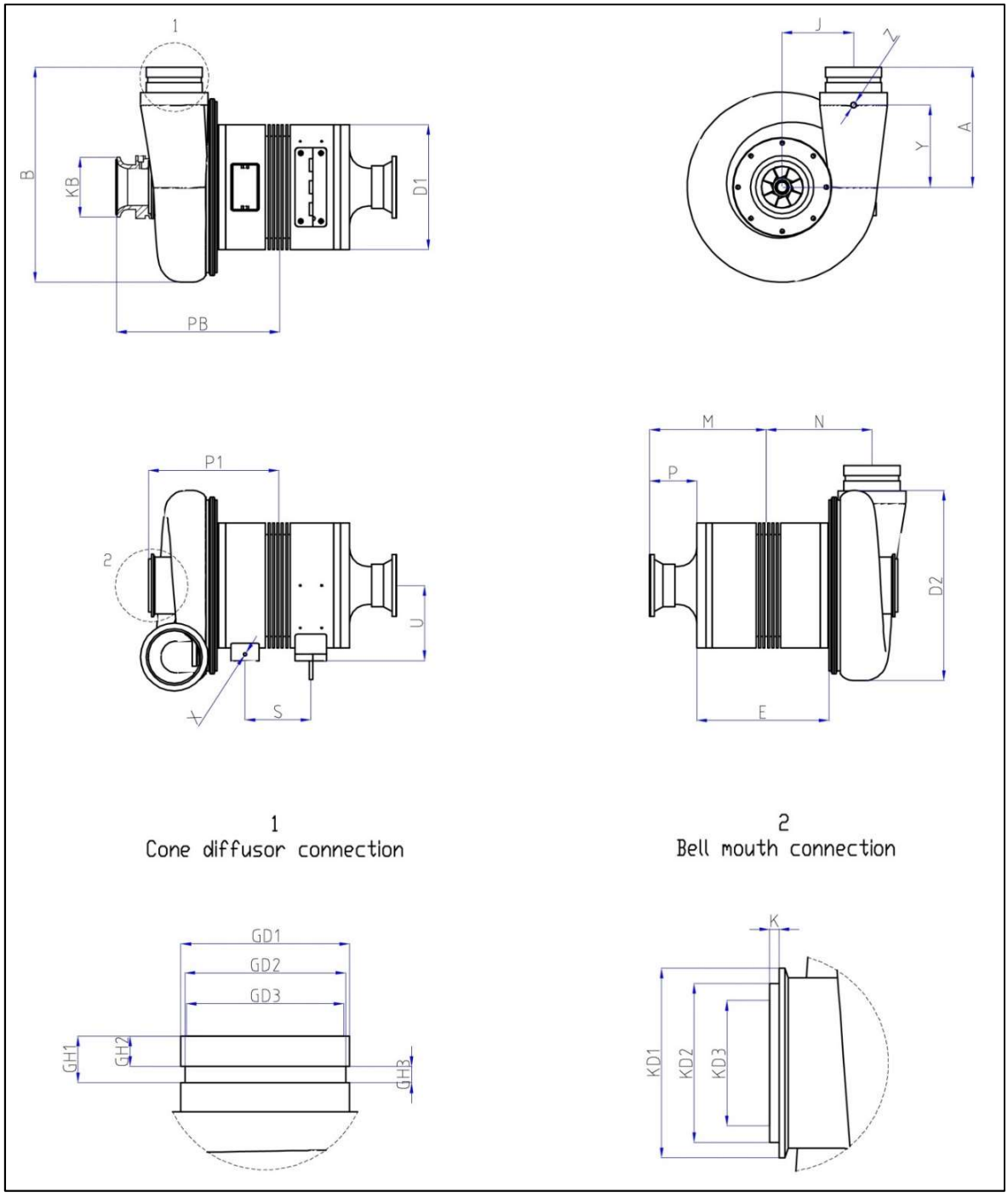

- **AT50-0.6S-200V ~ AT100-0.8SH-200V (Table 4)**

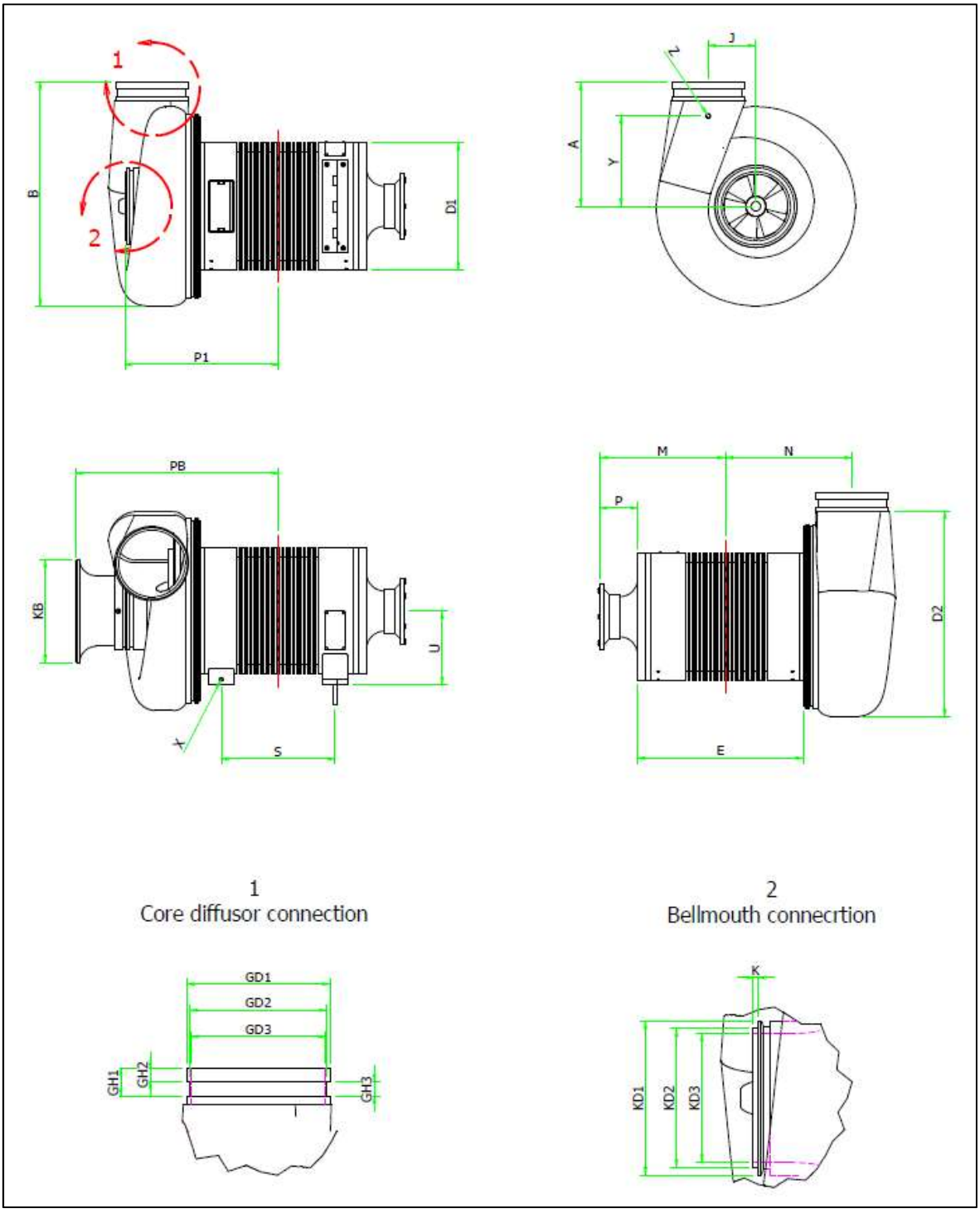

- **Table 4 MG5-200V Motor dimension data**

Model (MG5-200V)	**AT25-0.8S**		**AT50-0.6S**		**AT50-0.8S**	
Navision No.	**041-011498**		**041-011500**		**041-011502**	
Unit	mm	inch	mm	inch	mm	inch
A	190	7.5	200	7.9	200	7.9
B	340.5	13.4	358.5	14.1	358.5	14.1
D1	198	7.8	198	7.8	198	7.8
D2	300.5	11.8	318.6	12.5	318.6	12.5
E	229.6	9	249.6	9.8	249.6	9.8
GH1	24.6	1	27	1.1	27	1.1
GH2	15.9	0.6	13	0.5	13	0.5
GH3	8.7	0.3	14	0.6	14	0.6
GD1	89.1	3.5	115	4.5	115	4.5
GD2	85	3.3	110	4.3	110	4.3
GD3	83.1	3.3	104	4.1	104	4.1
J	113.21	4.5	118	4.6	118	4.6
K	5	0.2	5	0.2	5	0.2
KD1	100	3.9	140	5.5	140	5.5
KD2	84	3.3	111	4.4	111	4.4
KD3	66	2.6	89.1	3.5	89.1	3.5
KB	105.6	4.2	131.2	5.2	119.2	4.7
M	195	7.7	200	7.9	205	8.1
N	177.4	7	219.5	8.6	219.5	8.6
P	74.6	2.9	74.6	2.9	74.6	2.9
P1	218.3	8.6	229.7	9	232.2	9.1
PB	274	10.8	300.4	11.8	288.4	11.4
S	122.5	4.8	142.5	5.6	142.5	5.6
U	119	4.7	119	4.7	119	4.7
X	M6	-	M6	-	M6	-
Y	130	5.1	135	5.3	135	5.3
Z	-	PT 1/8	-	PT 1/8	-	PT 1/8
Weight [Kg]	60		60		60	

- **Table 4 MG5-200V Motor dimension data (continue)**

Model (MG5-200V)	AT75-0.6S		AT75-0.8S		AT100-0.6S		AT100-0.8S	
Navision No.	041-011624		041-011505		041-011492		041-011516	
Unit	mm	inch	mm	inch	mm	inch	mm	inch
A	200	7.9	200	7.9	241	9.5	200	7.9
B	358.5	14.1	358.5	14.1	435	17.1	358.5	14.1
D1	198	7.8	198	7.8	246	9.7	198	7.8
D2	318.6	12.5	318.6	12.5	387.8	15.3	318.6	12.5
E	249.6	9.8	249.6	9.8	263	10.4	249.6	9.8
GH1	27	1.1	27	1.1	27	1.1	27	1.1
GH2	13	0.5	13	0.5	13	0.5	13	0.5
GH3	14	0.6	14	0.6	14	0.6	14	0.6
GD1	115	4.5	115	4.5	139.8	5.5	115	4.5
GD2	110	4.3	110	4.3	133.3	5.2	110	4.3
GD3	104	4.1	104	4.1	130	5.1	104	4.1
J	118	4.6	118	4.6	101	4	118	4.6
K	5	0.2	5	0.2	5	0.2	5	0.2
KD1	140	5.5	140	5.5	125.3	4.9	140	5.5
KD2	111	4.4	111	4.4	135	5.3	111	4.4
KD3	89.1	3.5	89.1	3.5	150	5.9	89.1	3.5
KB	161.5	6.4	161.5	6.4	200.5	7.9	161.5	6.4
M	205	8.1	205	8.1	141	5.6	205	8.1
N	219.5	8.6	219.5	8.6	217.2	8.6	219.5	8.6
P	74.6	2.9	74.6	2.9	73.8	2.9	74.6	2.9
P1	232.2	9.1	231.7	9.1	270.2	10.6	232.2	9.1
PB	310.7	12.2	302.2	11.9	364.7	14.4	310.7	12.2
S	142.5	5.6	142.5	5.6	161.5	6.4	142.5	5.6
U	119	4.7	119	4.7	143	5.6	119	4.7
X	M6	-	M6	-	M6	-	M6	-
Y	135	5.3	135	5.3	176	6.9	135	5.3
Z	-	PT 1/8	-	PT 1/8	-	PT 1/8	-	PT 1/8
Weight [Kg]	60		60		100		60	

8. MOTOR MATERIAL PROPERTIES

No.	Description	Material
1	Scroll Casing	AC4CH Aluminum Alloy
2	Impeller	High Strength stainless 17-4PH Steel
3	Shaft/Rotor	Titanium Alloy/ Samarium Cobalt Permanent Magnets
4	Stator	Copper Windings
5	Air Foil Bearing	Stainless steel with coating
6	Cooling Impeller (Single Models Only)	High Strength stainless 17-4PH Steel

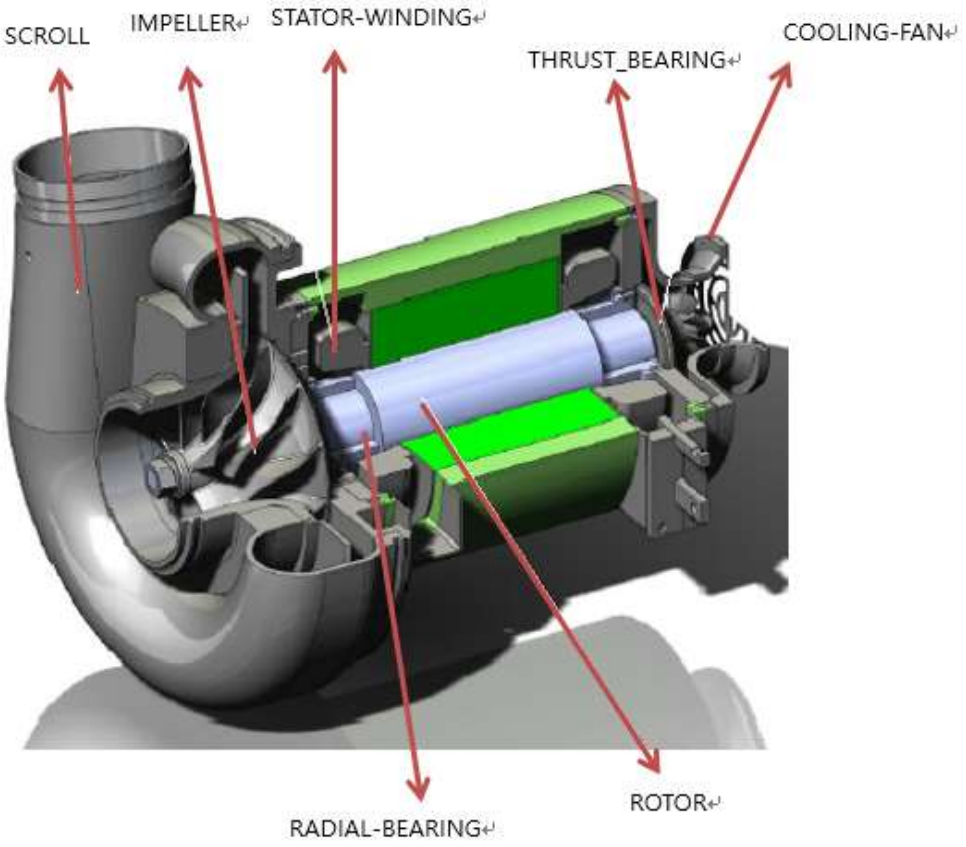

9. ELECTRICAL SPECIFICATION (at design point)

Model (MG5)	Voltage	Nominal Power	Min. Speed	Max. Speed	Nominal Current At (400V)
	[V]	[kW]	[rpm]	[rpm]	[A]
AT25-0.8S	400	20	9000	47500	37
AT50-0.6S	400	40	9000	38000	68
AT50-0.8S	400	40	9000	42000	68
AT75-0.6S	400	60	9000	42000	100
AT75-0.8S	400	60	9000	42000	100
AT100-0.6S	400	80	9000	29000	127
AT100-0.8S	400	80	9000	42000	135
AT100-1.0S	400	80	9000	35000	132
AT150-0.6S	400	120	9000	24000	201
AT150-0.8S	400	120	9000	32000	201
AT150-1.0S	400	120	9000	35000	201
AT200-0.8S	400	160	9000	27000	274
AT200-1.0S	400	160	9000	36000	274
AT300-0.6T	400	245	9000	24000	413
AT400-0.8T	400	325	9000	27000	545
AT400-1.0T	400	325	9000	36000	525

Model (MG5)	Starting to nominal current	Nominal Torque	Efficiency	Power Factor	Max. Allowable Temperature by PT1000
	[Ratio]	[Nm]	[%]	[%]	[˚C]
AT25-0.8S	0.06	4.2	96.5	90	180
AT50-0.6S	0.06	9.3	96	88	180
AT50-0.8S	0.06	8.4	96	90	180
AT75-0.6S	0.06	12.73	96.2	89	180
AT75-0.8S	0.06	12.73	96.2	90	180
AT100-0.6S	0.06	25.31	97.1	89	180
AT100-0.8S	0.06	17.05	97.1	88	180
AT100-1.0S	0.06	20.46	97.2	86	180
AT150-0.6S	0.06	44.1	97.7	88	180
AT150-0.8S	0.06	39.79	98.2	88	180
AT150-1.0S	0.06	30.56	97.7	89	180
AT200-0.8S	0.06	54.6	97.9	86	180
AT200-1.0S	0.06	39.79	98.2	86	180
AT300-0.6T	0.06	106.1	98.4	90	180
AT400-0.8T	0.06	106.1	98.4	88	180
AT400-1.0T	0.06	84	98.5	91	180

Model MG5-200V	Voltage	Nominal Power	Min. Speed	Max. Speed	Nominal Current At (200V)
	[V]	[kW]	[rpm]	[rpm]	[A]
AT25-0.8S	200	20	9000	47500	76.4
AT50-0.6S	200	40	9000	38000	159.5
AT50-0.8S	200	40	9000	42000	143.4
AT75-0.6S	200	60	9000	42000	234.3
AT75-0.8S	200	60	9000	42000	210
AT100-0.6S	200	80	9000	29000	261
AT100-0.8S	200	80	9000	42000	261

Model MG5-200V	Starting to nominal current	Nominal Torque	Efficiency	Power Factor	Max. Allowable Temperature by PT1000
	[Ratio]	[Nm]	[%]	[%]	[˚C]
AT25-0.8S	0.06	4.4	97	85	180
AT50-0.6S	0.06	10.1	96.9	87	180
AT50-0.8S	0.06	9.1	96.9	89	180
AT75-0.6S	0.06	15	96.9	85	180
AT75-0.8S	0.06	13.4	96.9	86	180
AT100-0.6S	0.06	25.1	97.2	85	180
AT100-0.8S	0.06	22.8	97.2	86	180

DATASHEET
Aerzen Turbo IG5

Contents

1. HIGHLIGHTS 3
2. INTRODUCTION 3
3. INTENDED USE 3
4. STANDARDS AND REGULATIONS 3
5. MODELS 4
6. TRANSPORT AND STORAGE CONDITION 4
7. TECHNICAL DATA 5
8. EMC GUIDE 6
9. HARMONIC GUIDE 6
10. DIMENSIONS (in mm [inch]) 7
11. CONNECTORS 13
12. MAINTENANCE PARTS 14
13. DISPOSAL 14

Revision history

Version	Contents	Rev Date
02	Added THDi value data	4 January 2019
03	Revised THDi value data to the percentage expression	7 October 2019
04	Revised according to IG5.1 (Generation 2) released Changed old document No. to new document No.	24 July 2020
05	Revised the parts of the technical data	02 September 2020

1. HIGHLIGHTS

- High-speed turbo motor drive
- Motor temperature monitoring (PTC-1000 sensor)
- Robust environmental performance (45℃ ambient temperature)
- Air cooling up to 400HP drive
- Multi-level design from 75HP to 400HP (no bulk sinus filter)
- Blower-optimized control
- High efficiency
- Convenient monitoring and managing via blower HMI
- Software for easy configuration and trouble-shooting
- Spaces-saving design
- Easy maintenance
- Safety integrated
- CE marked
- RoHS compliant

2. INTRODUCTION

Aerzen Turbo IG5 inverter drives high-speed PMSM (permanent magnet synchronous motor) to adjust impeller rotational speed, which in turn controls flow rate and/or discharge pressure. In comparison with conventional blowers having fixed frequency drive system, inverter-driven Aerzen Turbo blowers show better energy saving, reliability and starting features, which are directly attributed to Aerzen Turbo IG5 inverter technology.

3. INTENDED USE

Aerzen Turbo IG5 is designed exclusively for Aerzen Turbo blowers and must be used in Aerzen Turbo blower. Safety, performance, reliability, approval and warranty of Aerzen Turbo IG5 are guaranteed only for Aerzen Turbo blower application.

4. STANDARDS AND REGULATIONS

Aerzen Turbo IG5 complies with following standards and directives:

- Low Voltage Directive 2014/35/EU
- Machinery Directive 2006/42/EC
- EMC Directive 2014/30/EU
- DIN EN 61800

5. MODELS

Rating	Model	Item No.	Part No.	Applicatios
25HP	AT25 IG5	041-020778	0369876LF0000	AT25-0.8S blowers
50HP	AT50 IG5	041-020820	0369878MF0001	AT50-0.6S and -0.8S blowers
75HP	AT100 IG5	041-020997	0369871BF0001	AT75-0.6S and -0.8S blowers
100HP				AT100-0.6S, -0.8S and -1.0S blowers
150HP	AT150 IG5	041-020953	0369872CF0000	AT150-0.6S, -0.8S and -1.0S blowers
200HP	AT200 IG5	041-020998	0369873DF0001	AT200-0.6T, -0.8S and -1.0S blowers
300HP	AT300 IG5	041-020954	0369874EF0000	AT300-0.6T. -0.8T and -1.0T blowers
400HP	AT400 IG5	041-020999	0639875FF0001	AT400-0.8T and -1.0T blowers

6. TRANSPORT AND STORAGE CONDITION

Following points must be especially be taken into consideration:

- ✓ Protect IG5 against mechanical damage (maximum acceleration = 40 m/s^2)
- ✓ Protect IG5 against dirty and humidity
- ✓ Never touch electronic components

Following climatic conditions apply to storage. If required, appropriate measures must be taken to ensure these climatic conditions (installation of heating/air conditioning systems etc.):

- ✓ The storage area must be clean (dust-free, if possible), dry and well-ventilated
- ✓ Storage in outdoor area is not permitted
- ✓ The storage temperature must be in the rage of -25℃ to +55℃ (-13℉ to +131℉)
- ✓ The relative humidity on the storage premises must be in range of 5% to 75% (no bedewing)
- ✓ Sudden changes of temperature or humidity should be prevented
- ✓ Avoid stacking of the inverters during transport and storage

Electrolytic capacitors produce leakage currents when voltage is applied after long storage period without applied voltage. Reforming the electrolytic capacitors may be required.

7. TECHNICAL DATA

Items	AT25 IG5	AT50 IG5	AT100 IG5	AT150 IG5	AT200 IG5	AT300 IG5	AT400 IG5
Rated Output Current	44 Arms	90 Arms	154 Arms	230 Arms	295 Arms	435 Arms	590 Arms
Maximum Output Current	70,7 Arms	95 Arms	165 Arms	255 Arms	310 Arms	480 Arms	630 Arms
Short Circuit Current Rating	5kA	5kA	10kA	10kA	10kA	18kA	18kA
Maximum Output Frequency	2000Hz	2000Hz	1000Hz	1000Hz	1000Hz	1000Hz	1000Hz
Output Frequency Stability	≤ 0,2%						
Switching Frequency	8kHz (AT75 to AT400)/16kHz (AT25 and AT50)						
Input Voltage	380 ~ 480 Vac ± 10%						
Input Frequency	50Hz/60Hz ± 3%						
Logic Supply	18 ~ 28Vdc						
Power Loss of Logic Unit	36W	60W	50W	50W	50W	50W	50W
Power Loss of Power Unit	Max. 3% at rated power	Max. 4% at rated power	Max. 4% at rated power	Max. 4% at rated power	Max. 4% at rated power	Max. 4% at rated power	Max. 4% at rated power
Protection Function	Grid phase-loss, Motor phase-loss, Grid over/under-voltage, DC-link over/under-voltage, Inverter over-load, Motor over-load, Inverter over-temperature, Motor over-temperature, Ambient over-temperature						
Cooling	Forced air cooling						
IP Rating[4)]	IP20	IP20	IP20	IP20	IP20	IP20	IP20
Weight (Approx.)	12 kg (26,5 lb)	17,2 kg (37,9 lb)	33,8 kg (74,5 lb)	70 kg (154,4 lb)	85 kg (187 lb)	200 kg (440,9 lb)	200 kg (440,9 lb)
Altitude[1)]	1000 m above MSL (3281 ft)						
Relative Humidity	Max. 85% (No condensation)						
Ambient Temperature[2)]	-20ºC ~ +45ºC (-4ºF ~ +113ºF)						
THDi[3)]	44,7%	42,5%	34,0%	32,3%	29,8%	26,5%	25,6%
Vibration	Frequency: 2 ≤ f ≤ 9 — Amplitude [mm]: 0,3 — Acceleration [m2/s]: N/A Frequency: 9 ≤ f ≤ 200 — Amplitude [mm]: N/A — Acceleration [m2/s]: 1,0						

1) For operation in areas higher than 1000 m (3281 ft) above MSL, the output power shall be reduced after engineering investigation by Aerzen Group. Maximum site altitude with derating is 3000 m (9843 ft) above MSL for TN and TT power grid systems with symmetrical grounding and 2000 m (3281 ft) above MSL for IT power grid system.

2) For operation at ambient temperature higher than 45ºC, the output power shall be reduced after engineering investigation by Aerzen Group. Maximum operating temperature with derating is 50ºC.

3) The stated THDi values were determined by means of a simulation for the following mains parameters: mains transformer with 630kVA/400V with a connecting cable length of 200 m. (Reference: Document No. P-TD-0000532.5, Drive System SD2M, 2020)

4) For the housing excluded the power connector.

8. EMC GUIDE

According to EMC product standard DIN EN 61800-3, chapter 6 (emission of line interference), Aerzen Turbo IG5 meets the interference limit values of the category C3 (rated current I > 100A and < 400A). In order to avoid interfering signals due to crosstalk on signal lines, power supply cables should run separately from signal cables. According to the EMC product standard DIN EN 61800-3, chapter 6 (emission of line interferences), this devices meets the interference limit values of the category C4 (rated current I > 400 A) if at least one of the below listed requirements is met.

Requirements

- Current higher than 400A
- Voltage over 1000V
- Main supply either isolated from ground or connected to ground via a high impedance ("IT Networks" according to IEC 60364-1:2005, 312.2.3)
- The dynamic operating behavior is limited due to filter effects.

NOTE: High-frequency interferences may occur, if the device is used in a public mains, which supplies residential areas. These interferences may disturb the functioning of other devices.

9. HARMONIC GUIDE

Item		AT25	AT50	AT100	AT150	AT200	AT300	AT400
THDi [%]		44,7	42,5	34,0	32,3	29,8	26,5	25,6
Power [kW]		21	41	100	149	190	285	389
Line Reactor	Rated Current [A]	40	90	180	300	300	630	630
	Short Circuit Voltage, µk [%]	3	3	3	3	3	3	3

Above-stated THDi values are determined by means of a simulation for following mains parameters: mains transformer with 630kVA/400V with a connecting cable length of 200m. The table indicates the power and the line reactor used during measurement of respective device.
Aerzen Turbo IG5 without use of a harmonic filter shall NOT meet IEEE 519-2014 guideline. Appropriate size of harmonic filter must be considered to limits the harmonic distortion.

10. DIMENSIONS (in mm [inch])

A. AT25 IG5

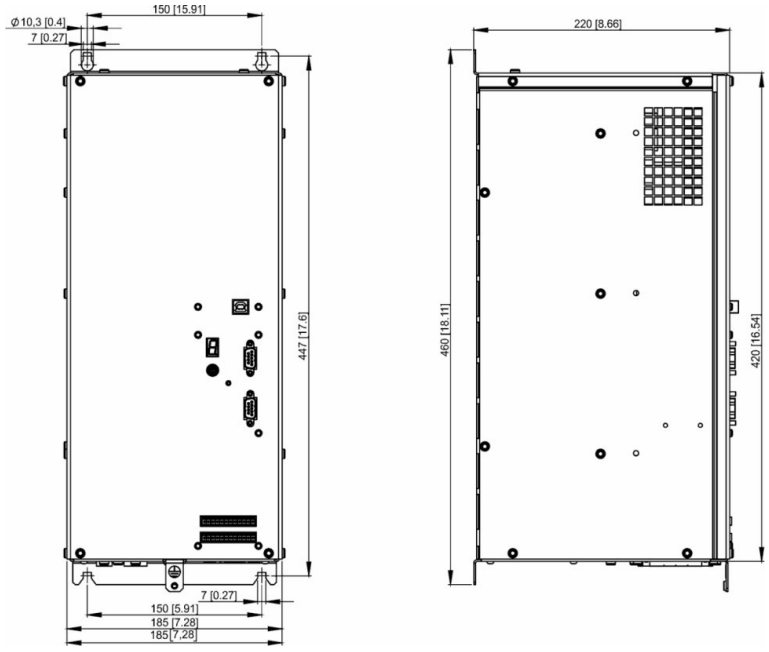

B. AT50 IG5

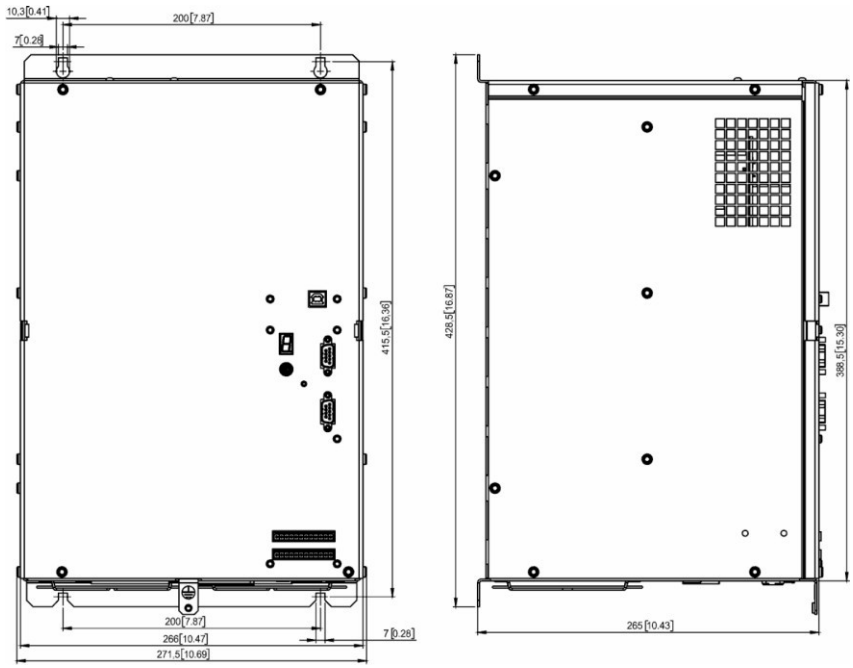

C. AT100 IG5

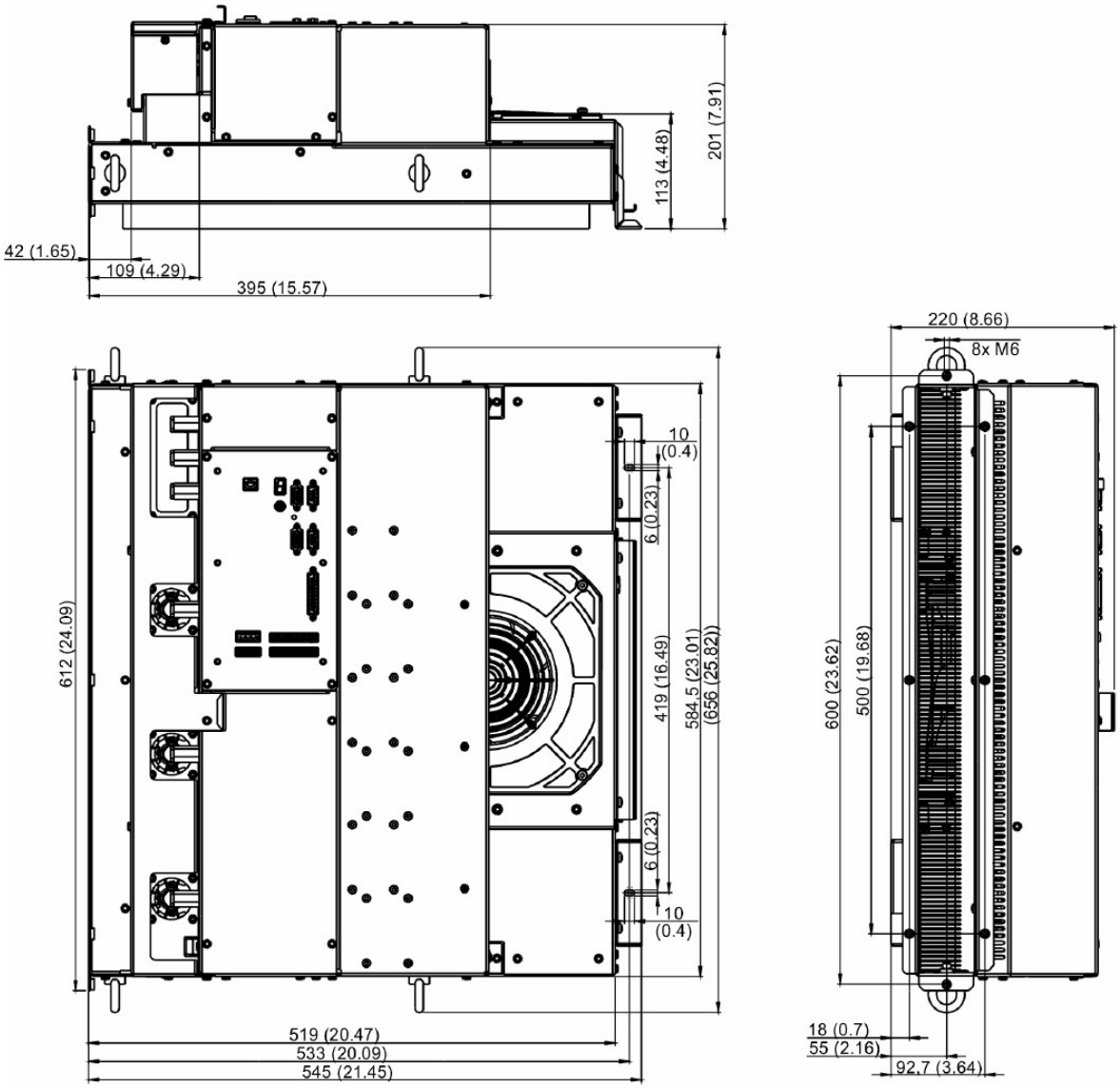
201 (7.91)
113 (4.48)
42 (1.65)
109 (4.29)
395 (15.57)
612 (24.09)
10 (0.4)
6 (0.23)
419 (16.49)
584.5 (23.01)
(656 (25.82))
6 (0.23)
10 (0.4)
519 (20.47)
533 (20.09)
545 (21.45)
220 (8.66)
8x M6
600 (23.62)
500 (19.68)
18 (0.7)
55 (2.16)
92.7 (3.64)

D. AT150 IG5

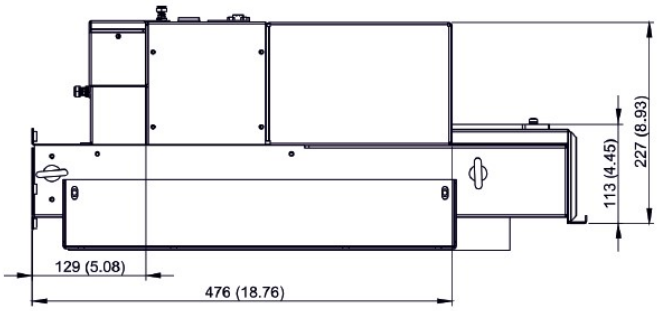
227 (8.93)
113 (4.45)
129 (5.08)
476 (18.76)

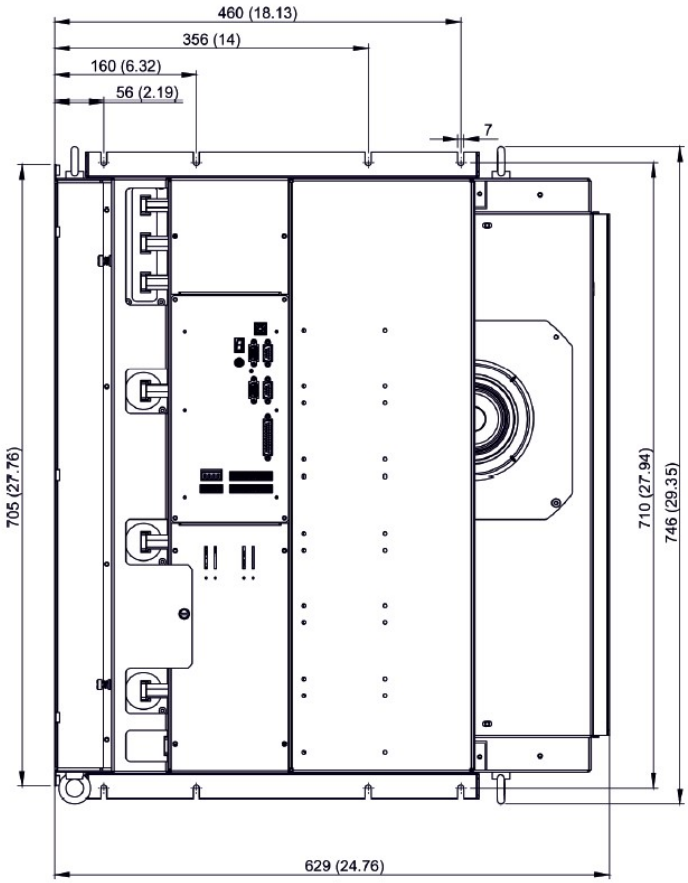
460 (18.13)
356 (14)
160 (6.32)
56 (2.19)
7
705 (27.76)
710 (27.94)
746 (29.35)
629 (24.76)

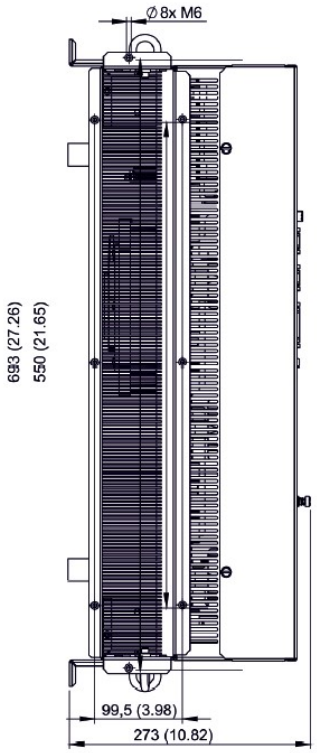
Ø 8x M6
693 (27.26)
550 (21.65)
99,5 (3.98)
273 (10.82)

E. AT200 IG5

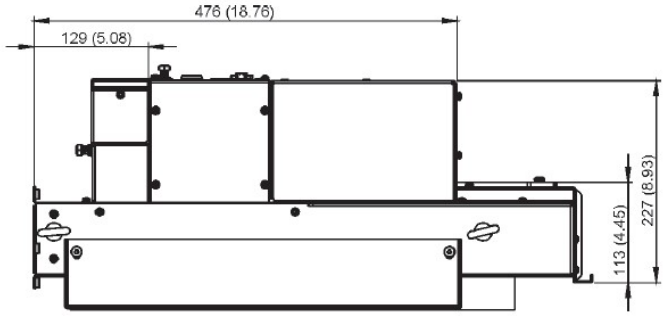
476 (18.76)
129 (5.08)
227 (8.93)
113 (4.45)

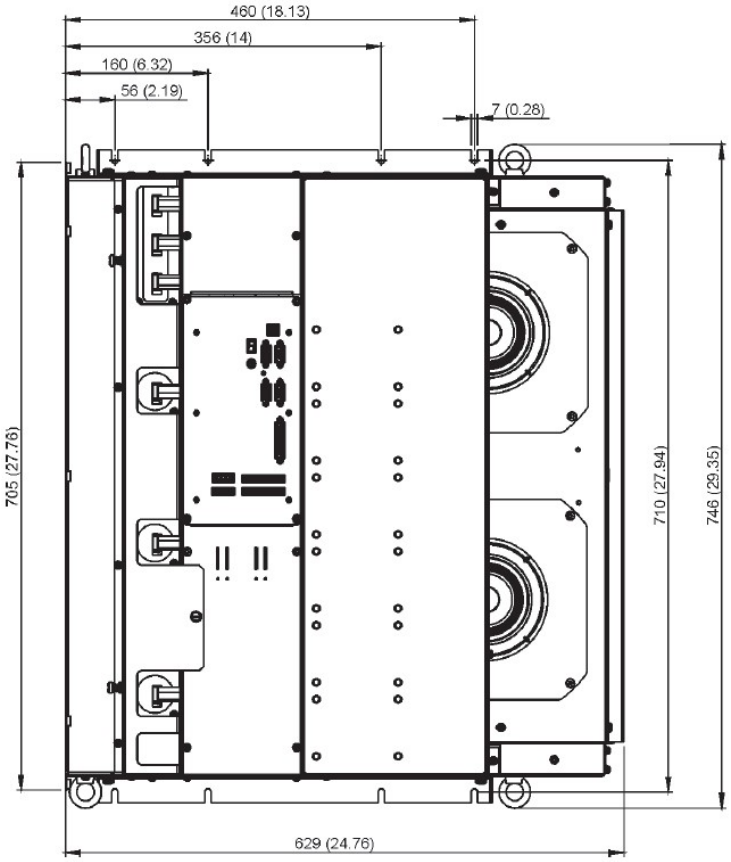
460 (18.13)
356 (14)
160 (6.32)
56 (2.19)
7 (0.28)
705 (27.76)
710 (27.94)
746 (29.35)
629 (24.76)

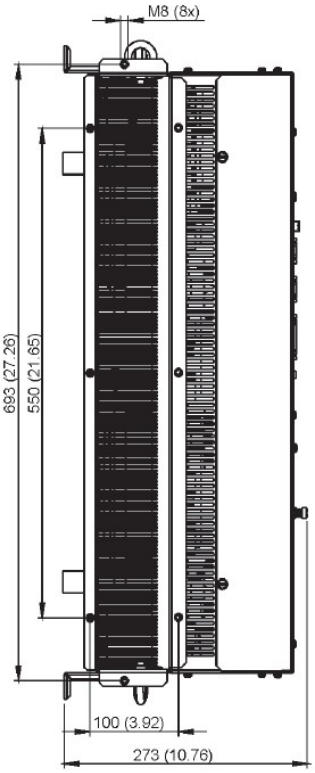
M8 (8x)
693 (27.26)
550 (21.65)
100 (3.92)
273 (10.76)

F. AT300 IG5

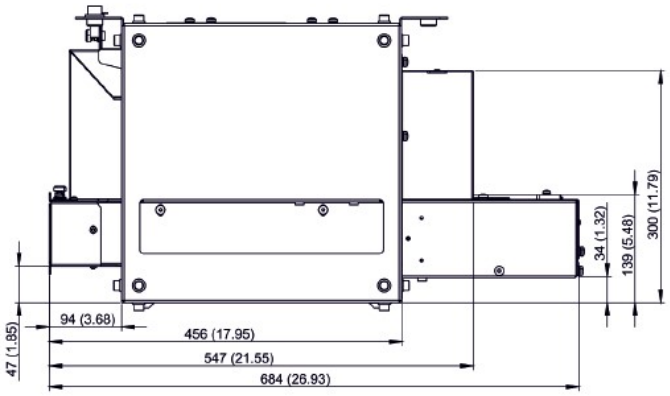
34 (1.32)
139 (5.48)
300 (11.79)
94 (3.68)
456 (17.95)
547 (21.55)
684 (26.93)
47 (1.85)

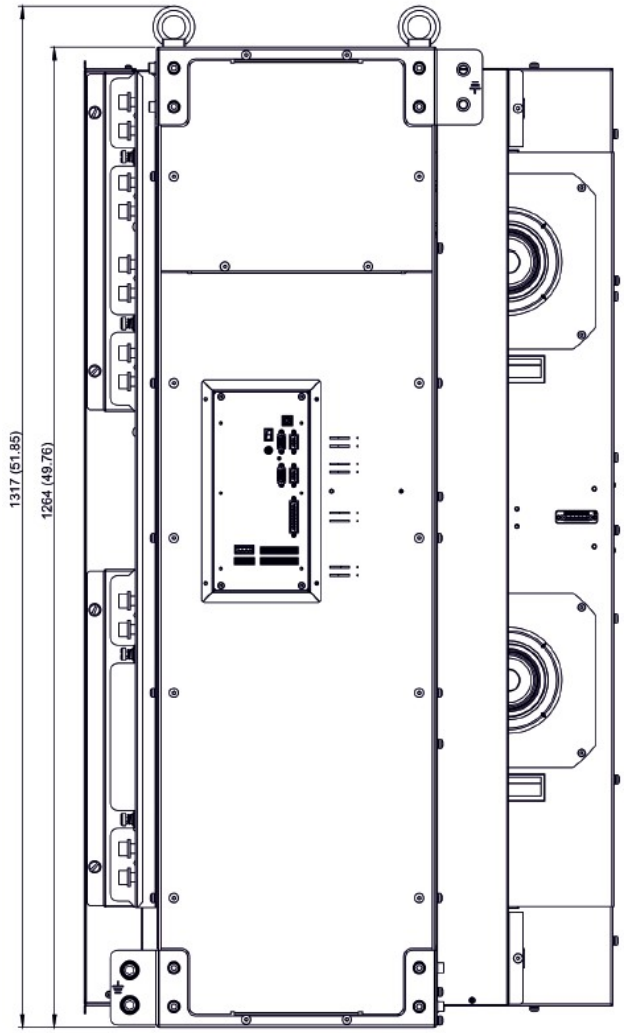
1317 (51.85)
1264 (49.76)

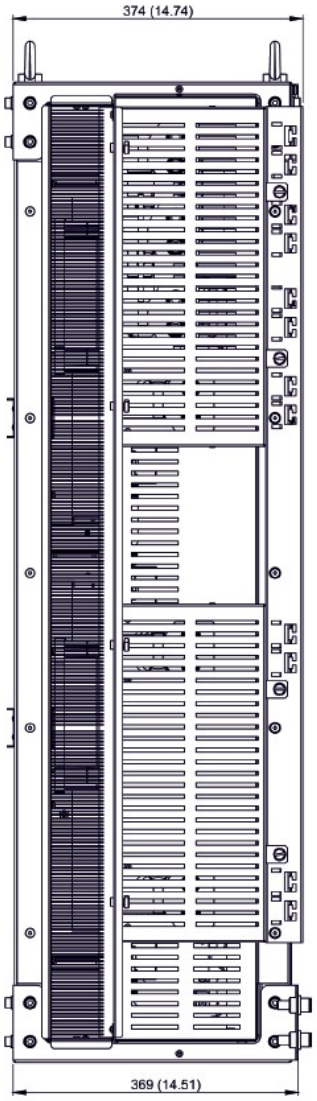
374 (14.74)
369 (14.51)

G. AT400 IG5

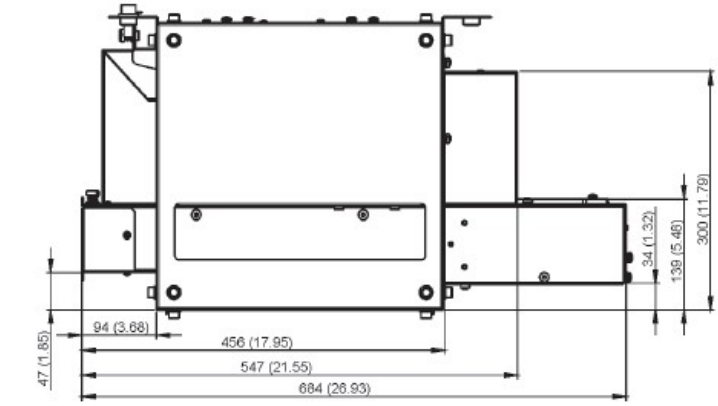
300 (11.79)
34 (1.32)
139 (5.46)
94 (3.68)
456 (17.95)
547 (21.55)
684 (26.93)
47 (1.85)

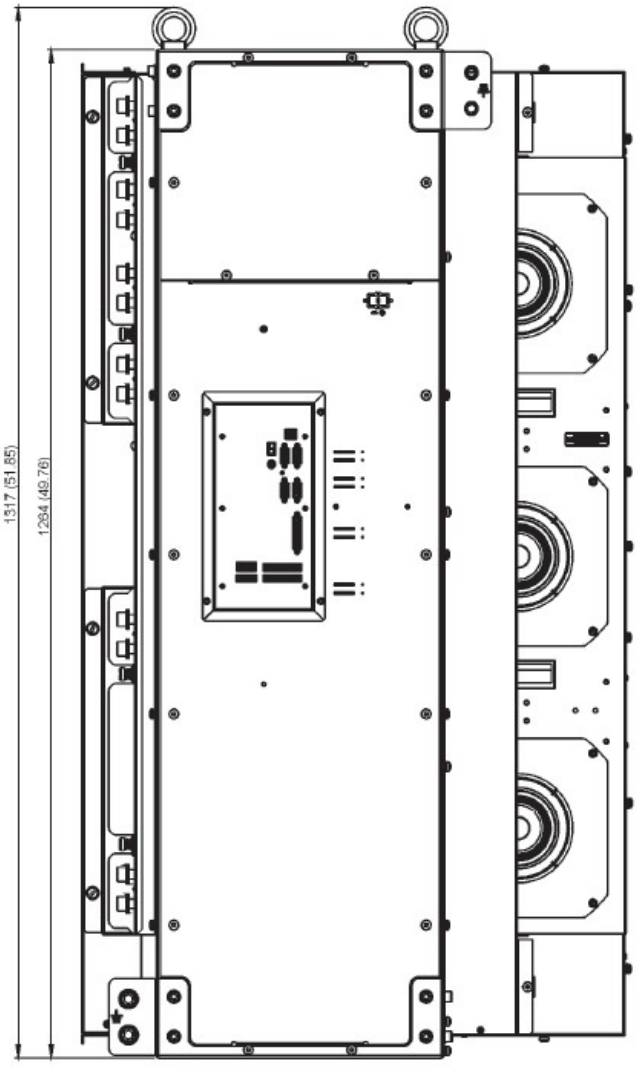
1317 (51.85)
1294 (49.76)

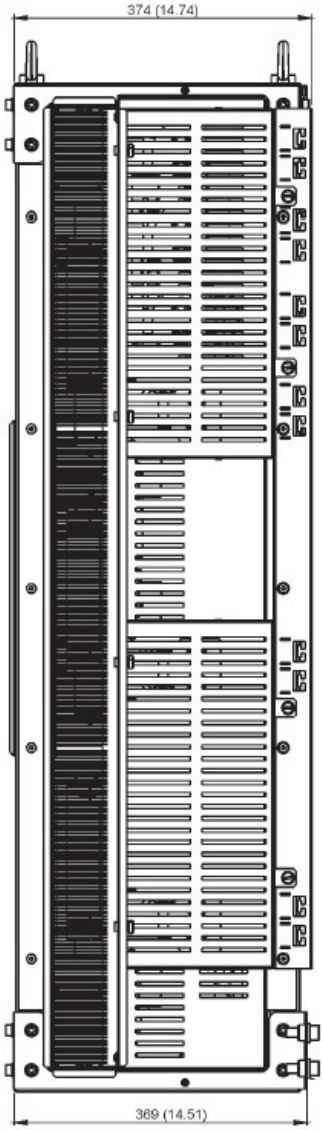
374 (14.74)
369 (14.51)

11. CONNECTORS

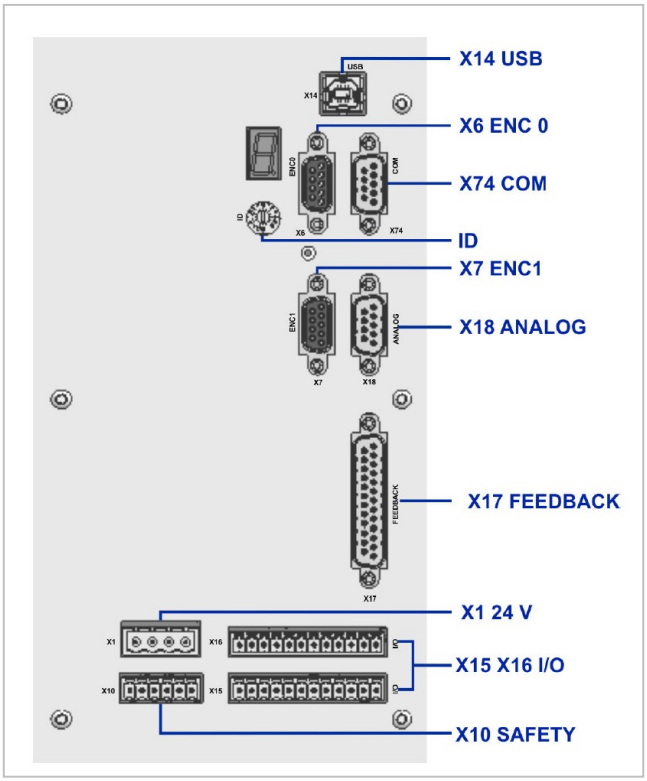

Connector	Description
ID	Address selection switch
X1 24V	24V logic voltage for power bus
X6 ENC0	Encoder 0 input
X7 ENC1	Input/output for Encoder 1
X10 SAFETY	Safety circuit/restart lock (STO)
X14 USB	USB interface for parameter setting
X15 I/O	Digital outputs
X16 I/O	Digital inputs
X17 Feedback	Signal transmitter of the first measuring system
X18 Analog	Analog signals
X74 COM[1)]	COM interface for devices belonging to device generation 2.xyz

1) In devices belonging to device version 2.xyz, X74 (processing card 036210027) is used as COM connector. The reason is that X74 has a different connection principle with slightly different functionalities than X19. (Reference: Document No. P-TD-0000532.5, Drive System SD2M, 2020)

12. MAINTENANCE PARTS

Maintenance of following device components is required

- Since life expectancy of limited due to the used motors and bearings the fans must be replaced
- Beside these maintenance work always ensures to keep ventilation slots free from dirt

A. Life expectancy

Component	Operating Time	Life-Expectancy
Fan	52.600 Hours	10 years

Remark: Life-expectancy depends on operating condition.

B. Fan unit

Inverter Model	Description	Item No.
AT75/100 IG5	Service Kit – Fan unit	041-020896
AT200 IG5	Service Kit – Fan unit	041-020848
AT400 IG5	Service Kit – Fan unit	041-020846

Remark: AT25 and AT50 IG5 shall be overhauled.

13. DISPOSAL

Aerzen Turbo IG5 meets requirement of following directive:

- 2011/65/EU (EU directive RoHS 2 on the restriction of the use of hazardous substance in electrical and electronic equipment)

Aerzen Turbo IG5 do not exceed the limits of the directive 2011/65/EU for hazardous substances.

□08 □de□e□de□□e Wa□ □oates□lle□□A □□3□0 □SA

Tele□□o□e: □6□0□380-0□44 Fa□: □6□0□380-0□□8
□□□□ries□ aer□e□□sa.□o□ www.aer□e□□sa.□o□

AERZEN

One Step Ahead

AERZEN TURBO SERIES

Air Foil Bearing

Air Foil Bearings are aerodynamic bearings. At standstill, the shaft sits on a foil tightened by springs. With the shaft rotation, an air wedge forms in the bearings between foil and shaft. This air wedge is the cushion that maintains the shaft in suspension without any need for an external source of compressed air. The bearings are not lubricated and the system is absolutely oil free. The absence of lubricating oil eliminates the risk of oil entering into the compressed air and also reduces the maintenance requirements. These bearings are exceptionally suitable for operation in the extreme environment of high-speed motors.

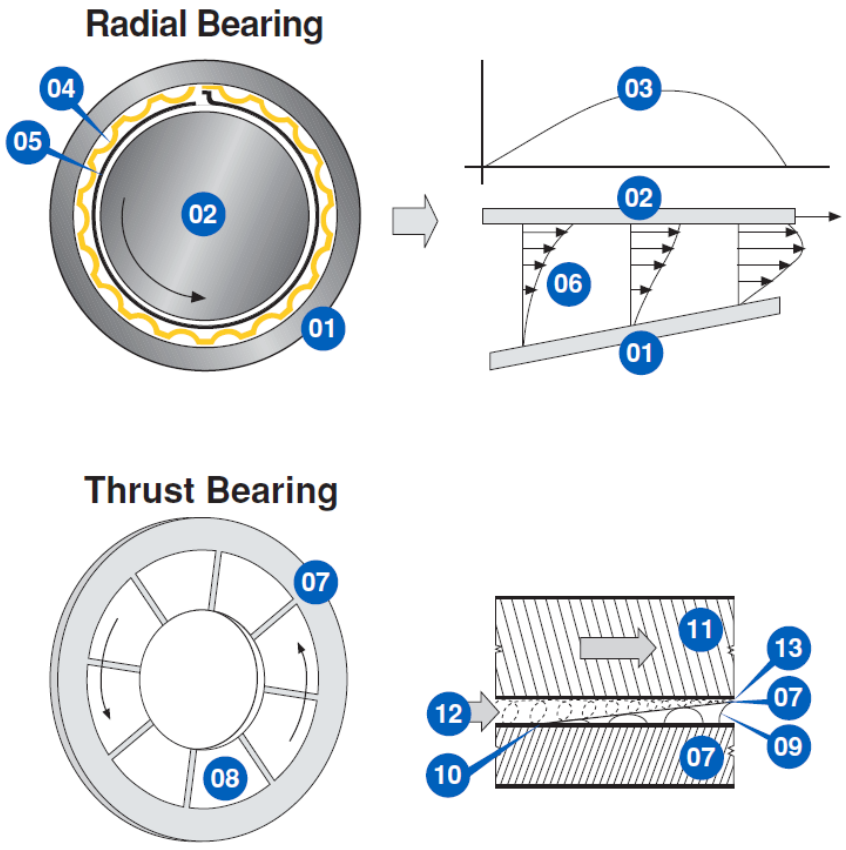

Radial Bearing

01 Bearing bushing
02 Shaft
03 Pressure development in the gap
04 Hastelloy spring element
05 Bearing foil
06 Air pressure development

Thrust Bearing

07 Bearing housing (stationary bearing)
08 Bearing foil (segments)
09 Spring element (segments of Hastelloy)
10 Fixation point for items 8 and 9
11 Shaft with disk
12 Air in the axial gap
13 Pressure build-up in the gap

□08 □□de□e□de□□e Wa□ □oates□lle□□A □□3□0 □SA

Tele□□o□e: □6□0□380-0□44 Fa□: □6□0□380-0□□8
□□□□ries□ aer□e□□sa.□o□ www.aer□e□□sa.□o□

AERZEN

One Step Ahead

AERZEN TURBO SERIES
Impeller

The impeller is made of high tensile strength 17-4PH stainless steel(X5CrNiCuNb174, M.No. 1.4542 sourced in the USA) widely used in the aviation industry for very high speed compressors. The high yield strength allows for the design of an optimized flow path with small blade thicknesses for the best aerodynamics. A cast impeller allows thinner blades to be produced than a standard milling process and a very high safety factor. For each combination of pressure and volume we have designed the best 3-dimensional impeller shape. The blades are backswept at the outlet for a broad and stable compressor design with high efficiency. The impellers are dynamically balanced by Aerzen Turbo Co, LTD to ISO 1940 Q 1.0. In addition, we offer single flow (one impeller) as well as double flow stages (two impellers in parallel) to find the best match with our customers demand. All impellers are mounted directly on the motor shaft without any transmission.

- Design through 3 dimensional flow analysis

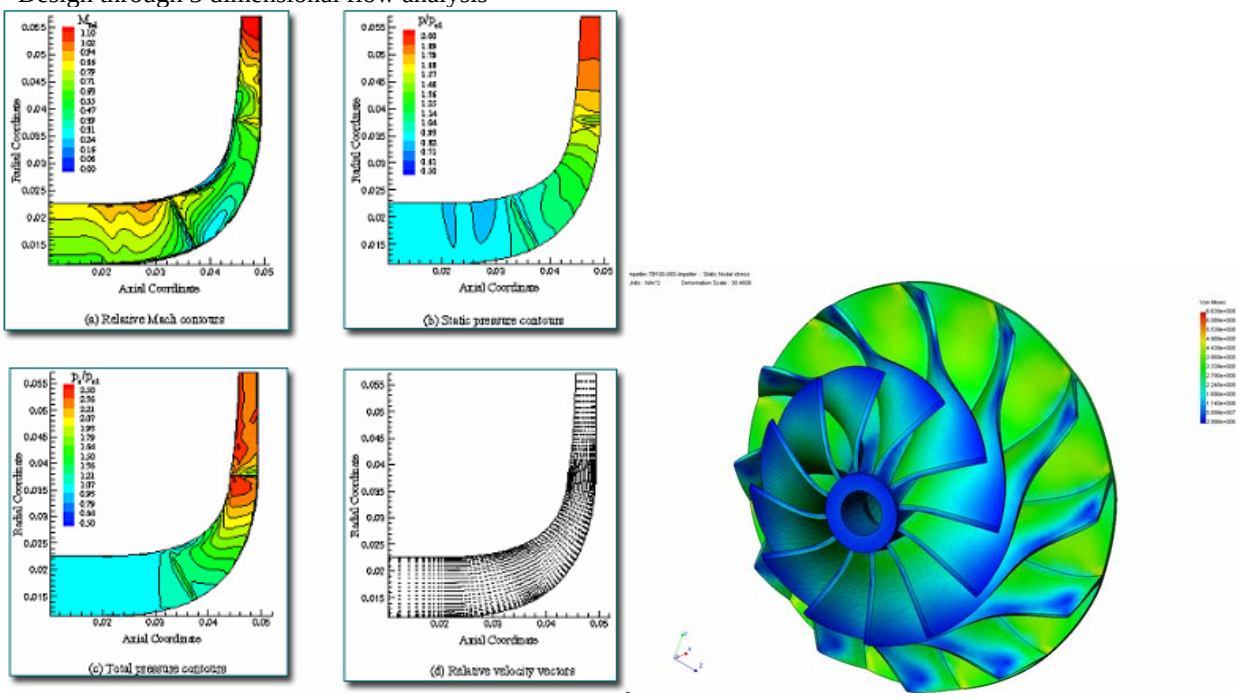

	BOV (Blow Off Valve)	AERZEN TURBO

BOV (Blow Off Valve)

Pos. 1

Pos. 2

Pos. 3

Pos. 4

Status	Prepared	Reviewed	Approved	Effective	English
Name	Jaeho. Lee(M)	2017.01.06 Jaeho Lee(M)	2017.01.06 Jongcheon.Seo		Translation of the original document
Date of issue					Document number-Revision TD-050300040021-EN-02

1. Model : HPA 125A-3P

1.1. Features

- Diaphragm pilot type
- Normally open
- Terminal box type

1.2. Application

- Turbo machine

1.3. Dimensions

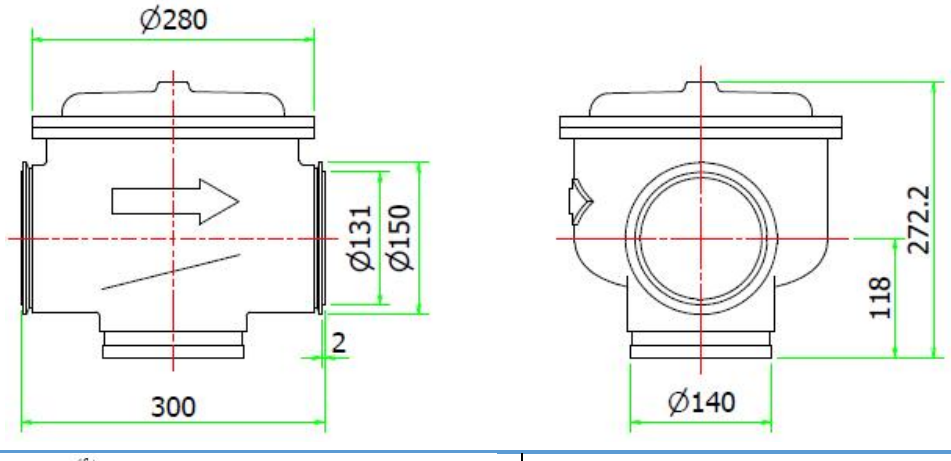

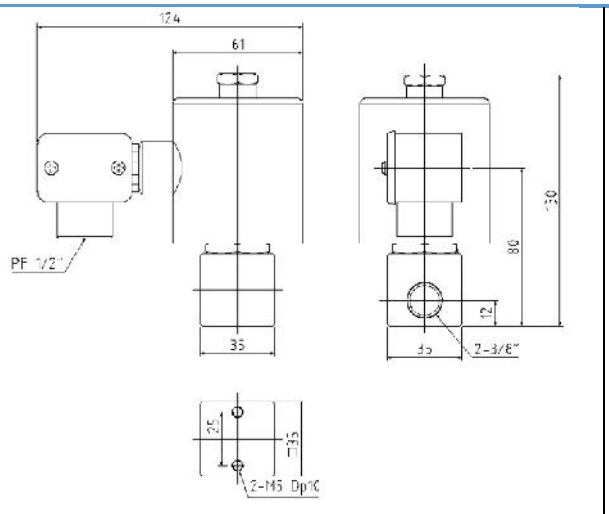

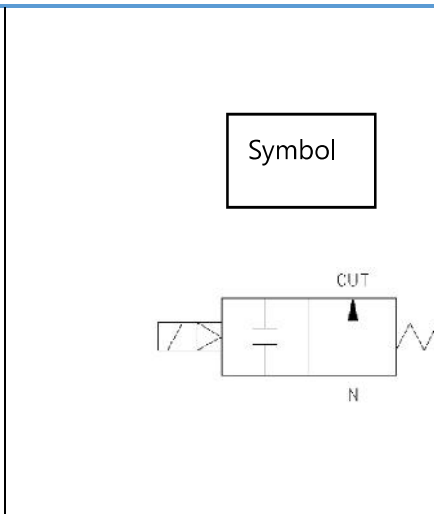

1.4. Specifications

Classification	Standard	Classification	Standard
Fluid	Air	Rated voltage	AC-220V 50/60Hz
Ambient Temp.	0 ~ 50°C		
Pressure Range	0.2 ~ 2 kgf/㎠		
Max allowed Pressure	10 kgf/㎠	Voltage allow	±10%(AC)
Insulation Grade	Class H	Watts	AC : 10W
Electrical Conn.	Terminal box type	Body material	ALUMINIUM
End Conn,	Clamp	Seat Material	HOT AIR : FPM
Orifice size	Ø125mm (Out diameter)	Weight	MAIN VALVE : 9.77 kg PILOT VALVE : 1.36 kg
* CONSULT WITH HSE(www.hsevalve.co.kr) ABOUT OTHER OPTION SPECIFICATIONS, PRODUCT SPECIFICATION IS TO SUBJECT TO THE QUALITY ENHANCEMENT.			

BOV (Blow Off Valve)

Pos. 1

Pos. 2

Pos. 3

Pos. 4

1. Model : HPA 150A-3P

1.1. Features

- Diaphragm pilot type
- Normally open
- Terminal box type

1.2. Application

- Turbo machine

1.3. Dimensions

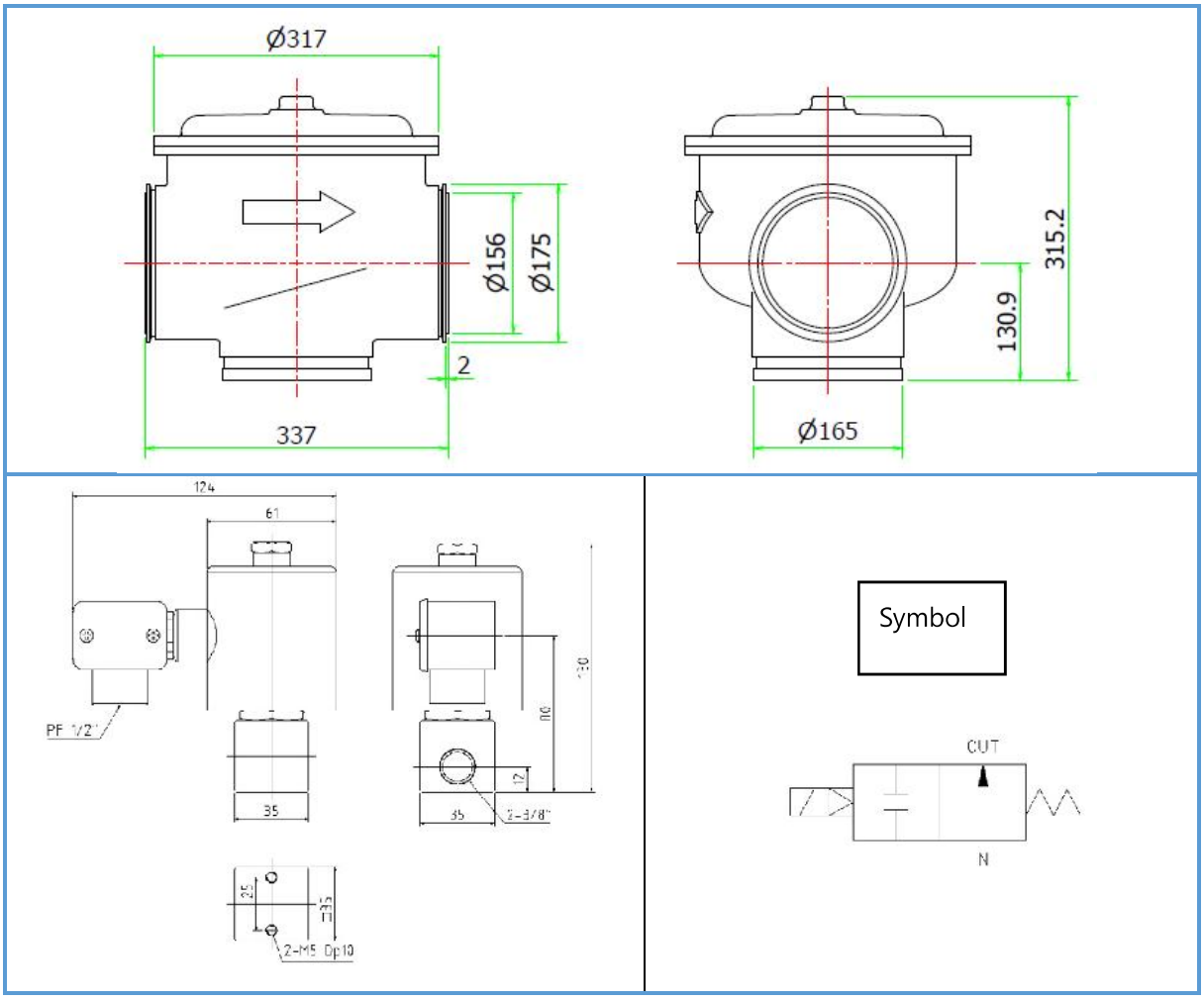

1.4. Specifications

Classification	Standard	Classification	Standard
Fluid	Air	Rated voltage	AC-220V 50/60Hz
Ambient Temp.	0 ~ 50°C		
Pressure Range	0.2 ~ 2 kgf/㎠		
Max allowed Pressure	10 kgf/㎠	Voltage allow	±10%(AC)
Insulation Grade	Class H	Watts	AC : 10W
Electrical Conn.	Terminal box type	Body material	ALUMINIUM
End Conn,	Clamp	Seat Material	HOT AIR : FPM
Orifice size	ø150mm (Out diameter)	Weight	MAIN VALVE : 16.3 kg PILOT VALVE : 1.72 kg
* CONSULT WITH HSE(www.hsevalve.co.kr) ABOUT OTHER OPTION SPECIFICATIONS, PRODUCT SPECIFICATION IS TO SUBJECT TO THE QUALITY ENHANCEMENT.			

For Blower Models: AT400-0.8T / AT300-0.6T

HSE

SOLENOID VALVE - 3 WAY SOLENOID VALVE

SYMBOL

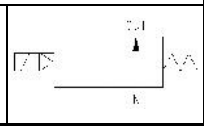

❑ MODEL

HPA 150A

❑ FEATURES

- DIAPHRAGM PILOT TYPE
- NORMALLY OPEN
- TERMINAL BOX TYPE

❑ APPLICATION

- TURBO MACHINE

❑ DIMENSIONS

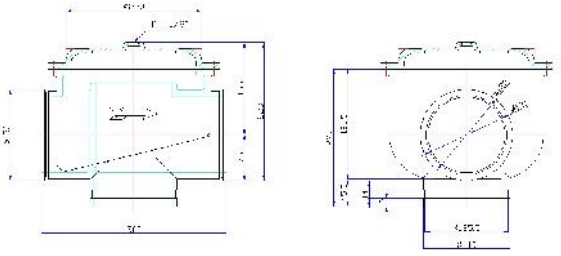

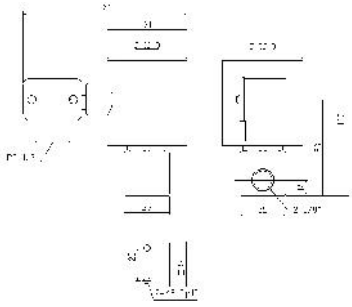

❑ SPECIFICATIONS

CLASSIFICATION	STANDARD	OPTION	CLASSIFICATION	STANDARD	OPTION
FLUID	AIR		RATED VOLTAGE	AC-220V 50/60Hz	·AC-110V 50/60Hz
FLUID TEMP.	160°C				
AMBIENT TEMP.	0 ~ 50°C				
PRESSURE RANGE	0.2 ~ 2 kgf/㎠		VOLTAGE ALLOW	±10%(AC)	
INSULATION GRADE	CLASS H		WATTS	AC : 10W	
ELECTRICAL CONN.	TERMINAL BOX TYPE		BODY MAT'L	ALUMINIUM	
END CONN.	CLAMP		SEAT MAT'L	FPM	
ORIFICE SIZE	⌀150mm		WEIGHT	MAIN VALVE : 16.3 kg PILOT VALVE : 1.36 kg	

* CONSULT WITH HSE ABOUT OTHER OPTION SPECIFICATIONS,
PRODUCT SPECIFICATION IS TO SUBJECT TO THE QUALITY ENHANCEMENT.

SELECTION GUIDE

UTS400

CATALOG NUMBERING [PRODUCT SELECTION]

UTS400 ····· **NT** ····· **ATU** ····· **400A** ····· **3P** ····· **LL** ····· **UL**

SERIES & FRAME: Susol 400AF

PERFORMANCE

Rating	80%	100%	kA
240Vac	N	NT	65
	H	HT	100
	L	LT	150
480Vac	N	NT	35
	H	HT	65
	L	LT	100
600Vac	N	NT	18
	H	HT	35
	L	LT	50

TRIP UNIT

FTU: Fixed Thermal, Fixed Magnet
FMU: Adj. Thermal, Fixed Magnet
ATU: Adj Thermal & Magnet
MCP: Motor Circuit Protector
MCS: Molded Case Switch

AMPERES

250	300
350	400

POLES

2: Two
3: Three

TERMINALS

LL: Lugs Line/Load Side
L : Lugs Line Side
LO: Lugs Load Side
- : Bolt-on

SUFFIX

UL : UL

UTS400 FRAME

UTS400 breaker is HACR rated

UL489 RATINGS

BREAKER TYPE	NUMBER OF POLES	INTERRUPTING CAPACITY (kA rms) AC 50/60Hz			INTERRUPTING CAPACITY (kA) DC	
		240V ac	480V ac	600V ac	250V DC-2P	600V DC-3P
UTS400N	2, 3	65	35	18	35	35
UTS400H	2, 3	100	65	35	50	50
UTS400L	2, 3	150	100	50	65	65

IEC60947-2 RATINGS

BREAKER TYPE	NUMBER OF POLES	INTERRUPTING CAPACITY(kA rms) AC 50/60Hz, Icu		
		220/240V	380/415V	480/500V
UTS400N	2, 3	65	35	18
UTS400H	2, 3	100	65	35
UTS400L	2, 3	150	100	50
Service breaking capacity, Ics (%Icu)			100%	
Insulation Voltage, Ui			750 VAC	
Impulse Withstand Voltage, Uimp			8 KVAC	
Utilization Category			A	

DIMENSIONS

POLE	DIMENSIONS inch (mm)		
	W	H	D
2-Pole 3-Pole	5.51 (140)	11.42 (290)	4.33 (110)

TRIP UNIT TYPES

	THERMAL	MAGNETIC	REMARKS
FTU	Fixed	Fixed	
FMU	Adjustable, 0.8~1 x In	Fixed	
ATU	Adjustable, 0.8~1 x In	Adjustable, 5~10 x In	
MCS	N.A.	Fixed, 10 x In	Magnetic only
MCP	N.A.	Adjustable, 6~12 x In	Magnetic only

CIRCUIT BREAKER

Ampere Rating, In	WITH FTU TRIP UNIT (FIXED THERMAL, FIXED MAGNETIC)			
	65kA at 240V, 35kA at 480V, 18kA at 600V		100kA at 240V, 65kA at 480V, 35kA at 600V	
	2-Pole	3-Pole	2-Pole	3-Pole
250A	UTS400·N·FTU·250·2	UTS400·N·FTU·250·3	UTS400·H·FTU·250·2	UTS400·H·FTU·250·3
300A	UTS400·N·FTU·300·2	UTS400·N·FTU·300·3	UTS400·H·FTU·300·2	UTS400·H·FTU·300·3
350A	UTS400·N·FTU·350·2	UTS400·N·FTU·350·3	UTS400·H·FTU·350·2	UTS400·H·FTU·350·3
400A	UTS400·N·FTU·400·2	UTS400·N·FTU·400·3	UTS400·H·FTU·400·2	UTS400·H·FTU·400·3

Ampere Rating, In	150kA at 240V, 100kA at 480V, 50kA at 600V	
	2-Pole	3-Pole
250A	UTS400·L·FTU·250·2	UTS400·L·FTU·250·3
300A	UTS400·L·FTU·300·2	UTS400·L·FTU·300·3
350A	UTS400·L·FTU·350·2	UTS400·L·FTU·350·3
400A	UTS400·L·FTU·400·2	UTS400·L·FTU·400·3

CIRCUIT BREAKER

WITH FMU TRIP UNIT (ADJUSTABLE THERMAL, FIXED MAGNETIC)				
Ampere Rating, In	65kA at 240V, 35kA at 480V, 18kA at 600V		100kA at 240V, 65kA at 480V, 35kA at 600V	
	2-Pole	3-Pole	2-Pole	3-Pole
300A	UTS400·N·FMU·300·2	UTS400·N·FMU·300·3	UTS400·H·FMU·300·2	UTS400·H·FMU·300·3
400A	UTS400·N·FMU·400·2	UTS400·N·FMU·400·3	UTS400·H·FMU·400·2	UTS400·H·FMU·400·3

Ampere Rating, In	150kA at 240V, 100kA at 480V, 50kA at 600V		Thermal range
	2-Pole	3-Pole	
300A	UTS400·L·FMU·300·2	UTS400·L·FMU·300·3	240~300A
400A	UTS400·L·FMU·400·2	UTS400·L·FMU·400·3	320~400A

WITH ATU TRIP UNIT (ADJUSTABLE THERMAL, ADJUSTABLE MAGNETIC)				
Ampere Rating, In	65kA at 240V, 35kA at 480V, 18kA at 600V		100kA at 240V, 65kA at 480V, 35kA at 600V	
	2-Pole	3-Pole	2-Pole	3-Pole
300A	UTS400·N·ATU·300·2	UTS400·N·ATU·300·3	UTS400·H·ATU·300·2	UTS400·H·ATU·300·3
400A	UTS400·N·ATU·400·2	UTS400·N·ATU·400·3	UTS400·H·ATU·400·2	UTS400·H·ATU·400·3

Ampere Rating, In	150kA at 240V, 100kA at 480V, 50kA at 600V		Adjustable range	
	2-Pole	3-Pole	Thermal	Magnetic
300A	UTS400·L·ATU·300·2	UTS400·L·ATU·300·3	240-300A	1500-3000A
400A	UTS400·L·ATU·400·2	UTS400·L·ATU·400·3	320-400A	2000-4000A

MOLDED CASE SWITCH

WITH MCS TRIP UNIT (FIXED MAGNETIC ONLY)				
Ampere Rating, In	65kA at 240V, 35kA at 480V, 18kA at 600V		100kA at 240V, 65kA at 480V, 35kA at 600V	
	2-Pole	3-Pole	2-Pole	3-Pole
400A	UTS400·N·MCS·400·2	UTS400·N·MCS·400·3	UTS400·H·MCS·400·2	UTS400·H·MCS·400·3

Ampere Rating, In	150kA at 240V, 100kA at 480V, 50kA at 600V	
	2-Pole	3-Pole
400A	UTS400·L·MCS·400·2	UTS400·L·MCS·400·3

MOTOR CIRCUIT PROTECTOR

WITH MCP TRIP UNIT (ADJUSTABLE MAGNETIC ONLY)				
Ampere Rating, In	3-Pole	3-Pole	3-Pole	Magnetic Range
320A	UTS400·N·MCP·320·3	UTS400·H·MCP·320·3	UTS400·L·MCP·320·3	1920-3840A

ACCESSORIES FOR UTS400

MECHANICAL LUGS

MAXIMUM BREAKER AMPERES	TERMINAL BODY MATERIAL	WIRE TYPE	ORDERING TYPE
400A	Aluminum	Cu/Al	AL400TS

AL400TS 250~400A Lug

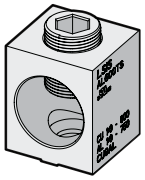

INNER ACCESSORIES

DESCRIPTION	CONTROL VOLTAGE	ORDERING TYPE
Auxiliary Switch, AX		
Alarm Switch, AL		
Shunt Trip, SHT	DC 12V	
	AC/DC 24V	
	AC/DC 48V	
	AC/DC 110~130V	
	AC 220~240V/DC 250V	
	AC 380~500V	
Undervoltage Trip, UVT	AC/DC 24V	
	AC/DC 48V	
	AC/DC 110~130V	
	AC 220~240V/DC 250V	
	AC 380~440V	
	AC 440~480V	

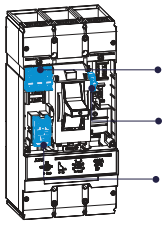

Type	Left(R)	Right(T)
AX	3	-
AL	-	1
SHT	1*	-
UVT	1*	-

* Applicable in indicated pole position-not synchronous

PADLOCKING DEVICE

DESCRIPTION	ORDERING TYPE
Lock in “OFF” position	PL3

<Pad Lock>

PLATE HANDLE LOCKING DEVICE

DESCRIPTION	ORDERING TYPE
Lock in “OFF” or “ON” position	PHL3

<Plate Handle Lock>

MECHANICAL INTERLOCKING DEVICE

DESCRIPTION	ORDERING TYPE
For 3-Pole breaker	MIT33

<Mechanical Interlock>

ENCLOSURE

ENCLOSURE DIMENSION (W X H X D) inch (mm)	ORDERING TYPE
13.78 (350) x 40.16 (1020) x 5.98 (152) : 80% rated	-
13.78 (350) x 40.16 (1020) x 7.17 (182) : 100% rated	-

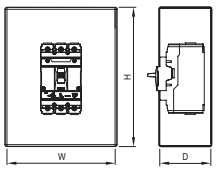

INSULATION BARRIERS

DESCRIPTION	QTY PER KIT	ORDERING TYPE
For 2-Pole breaker		B32
For 3-Pole breaker		B33

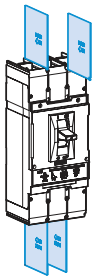

ROTARY OPERATING HANDLES

DESCRIPTION	TYPE	ORDERING TYPE
Directly Mounted	NEMA Type 1	DH-3
Directly Mounted (with Key lock)	NEMA Type 1	DHK-3
Extended (Door-Mounted)	NEMA Type 1	REH-3
NEMA Door-Mounted	NEMA Type 1, 12	EHU-3
	NEMA Type 3, 3R, 4	EHV-3
	NEMA Type 3, 4, 4X	EHX-3

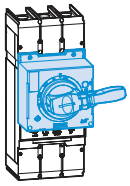

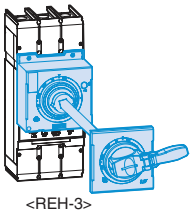

FLANGE HANDLES WITH SLIDING OPERATING MECHANISM

DESCRIPTION	TYPE	ORDERING TYPE
Handle (with sliding mechanism and without cable)	NEMA Type 1, 12, 3, 3R, 4	FHU-3
	NEMA Type 4, 4X	FHX-3
Cable	36 inch	FH3-36
	48 inch	FH3-48
	60 inch	FH3-60
	72 inch	FH3-72

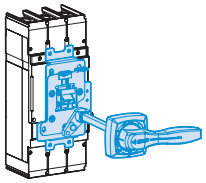

FLANGE HANDLES WITH CABLE OPERATING MECHANISM

DESCRIPTION	TYPE	ORDERING TYPE
Cable operating mechanism (without cable)		COM-3
Long type handle (with operating mechanism)	NEMA Type 1, 12, 3, 3R, 4	FHU-L
	NEMA Type 4, 4X	FHX-L
Cable	36 inch	FH3-36
	48 inch	FH3-48
	60 inch	FH3-60
	72 inch	FH3-72

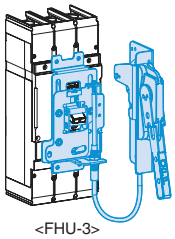

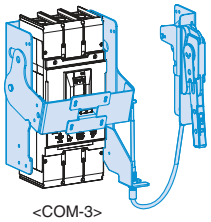

FLANGE HANDLES WITH VARIABLE-DEPTH OPERATING MECHANISM

DESCRIPTION	TYPE	ORDERING TYPE
Variable depth operating mechanism with threaded-rod and handle		VDM-3
Long type handle with operating mechanism	NEMA Type 1, 12, 3, 3R, 4	FHU-L
	NEMA Type 4, 4X	FHX-L

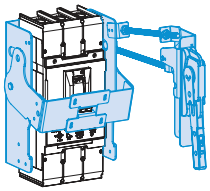
<VDM-3>

TYPE	DIRECTL MOUNTED	DOOR MOUNTED	FLANGE HANDLE WITH CABLE OPERATION MECHANSM	FLANGE HANDLE WITH VARIABLE DEPTH MECHANSM
NEMA TYPE 1	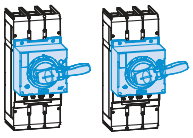	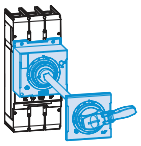	-	-
NEMA Type 1, 12, 3, 3R, 4, 4X	-	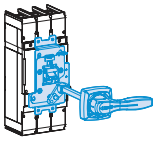	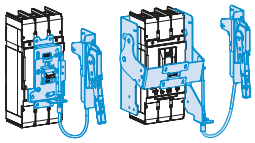	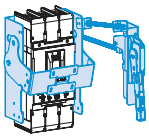

MOTOR OPERATOR

DESCRIPTION	CONTROL VOLTAGE	ORDERING TYPE
Standard type (Not lockable)	DC 24V	MOP3U
	AC 110V/DC 110V	MOP3U
	AC 230V/DC 220V	MOP3U
Lockable type	DC 24V	MOP3U-L
	AC 110V/DC 110V	MOP3U-L
	AC 230V/DC 220V	MOP3U-L

MOP3U-L

SECTION 4

Re□o□ □e□ded □o□trol S□□e□e □or M□lt□le T□r□o Blower o□erat□o□

Scope:

T□s □arrat□e s □te□ded to □ro□de □□da□□e o□ r□□□□□ □ □lt□le □lowers □ □arallel a□d t□e o□t□al □ro□ess □or add□t□o□ or s□□tra□t□o□ o□a T□r□o □lower w□t□□ a □ro□ess.

□o□s□lt t□e T□r□o □lower O □ M □a□□al □or deta□s o□□□stallat□o□□set□□□start□□ a□d o□erat□o□ o□t□s e□□□□□e□t.

□A□T□O□: Fa□l□re to □ro□erl□ o□erate t□e □lower or to o□ser□e t□e □□del□□es □□ t□e o□erat□□□ □a□□al □a□da□a□e t□e □lower or ot□er e□□□□□e□t.

Definition of terms:

Blow Off Valve (BOV) – An internal Normally Open valve that diverts discharge flow to atmosphere. The BOV is closed when the blower is in a loaded state.

Control Algorithm - Algorithm controlling the process variable to meet a predetermined set point. For aeration, the process variable is typically the air manifold pressure or dissolved oxygen level.

Off State - A blower that is not running in an unloaded or loaded state as defined below

Unloaded state - A blower that is running at a minimal rpm, not delivering air to the process piping. Air will be exhausted through an open internal Blow off Valve

Loaded state – A blower that is running and air is being delivered to the process. The internal blow off valve is closed.

Load Delay Timer – A field adjustable timer to delay subsequent actions after a blower receives the signal to Load. This delay allows time for the BOV to close prior to activating the control algorithm. It's setting will be site specific.

SV- Set Value- A command delivered to the blower to increase/decrease current command to the motor. Note that this set value is not linear with speed of the motor.

> *Minimum SV - Minimum allowable SV value at typical operating conditions. This value is set in the field during startup.*
>
> *Maximum SV - Maximum allowable SV value, typically 99-100%.*

Starting SV - SV value set for all blowers of same capacity after a change is made to the number of operational blowers. This value is selected to ensure that the blowers enter into an acceptable operating point under typical operating conditions. This value is set in the field during startup. This SV is the starting point for the demand control algorithm to adjust the SV value to meet the process demands. Multiple starting SV's may be required depending on the selection of blowers and site specific operating conditions. A typical value for the starting SV is 15% above the minimum SV. However, this value may vary depending on site conditions particularly if there are multiple blower types and/or sizes operating in parallel. The starting SV value shall be indicated in the startup report.

Lead Blower or blowers- One or more blowers operating to provide initial base load.

Lag Blower- Subsequent blower to provide flow in parallel with the previously defined lead blower or blowers.

Control Scheme- Multiple Turbo Blower operation only

1. Addition of the first Lead Blower

A. Selected Blower enters manual state.

B. Blower receives analog load command to minimum idle.

C. When the lead blower is confirmed running loaded the blower receives a load command to come into the process. SV will be set to start up SV.

D. After the load delay timer times out the control algorithm modifies the SV to the blower to deliver the required airflow to meet the process variable set point.

2. Addition of a Lag Blower

A. With one or more lead blowers running at maximum SV to the blower and process variable set point not yet a lag start delay timer is enabled.

B. When the lag start delay timer is out the control algorithm is satisfied.

C. SV is set to a start up SV value to be determined during start up of lead blower or blowers and the lag blower start command is enabled.

D. When the lag blower is confirmed running loaded and lead blowers are confirmed to be at start up SV the lag blowers load command shall be enabled.

E. Once the lag blower is confirmed loaded and the load delay timer times out satisfies one of the control algorithm should be released. The delay shall be field adjustable and determined at start up.

F. A start up SV signal shall be set for all online blowers and the SV for these blowers should match together SV remains equal for all online blowers of the same manufacturer.

G. Additional lag blower additions should follow A through F

3. Subtraction of lag turbo blower

A. With multiple blowers running at minimum SV and demand set point is met lag stop delay timer should be enabled

B. When the lag stop delay timer is done the control algorithm shall be satisfied. SV is held at minimum and the unload command is set to the lag blower

□. W□e□ t□e la□ □lower □s □o□□r□ed □□loaded □la□ □lower e□ters □dle□sta□e□□S□ □s set to a □ew start□□□ □al□e w□□□□ □s sele□ted to □ro□□de a s□□ □ar a□ □low □ro□ t□e re□ a□□□□□ □lowers as □s □ro□□ded □□all o□l□□e □lowers o□erat□□□ at □ □□□□ □□ S□. A t□□e dela□ □s e□a□led to allow t□e □lower to ad□□st to t□e □ew S□

D. W□e□ t□e dela□ t□□er □s do□e□s□s□e□s□o□ o□t□e □o□trol al□or□t□□ □s released. S□□s □or all o□l□□e □lowers are ra□ □ed □□ a□d dow□ □□t□e □o□trol al□or□t□□ □S□ re□ a□□s e□□al □or all o□l□□e □lowers o□e□□al □a□a□t□□

□. T□e □□loaded la□ □lower □o□t□□□es to □dle □r□□ □□loaded□□□t□ a□ o□erator-ad□□sta□le dela□ □□ □□□tes□□as ela□sed. □□d□r□□□ t□e □dle □er□od□t□e □o□trol al□or□t□□ re□□□res add□t□o□ o□t□e la□ □lower□t□e □lower s□all □e loaded □er ste□s □.□ t□ro□□□ □.F. □□t□e □dle □er□od e□□□res w□t□o□t t□e la□ □lower □e□□□ □alled to load□t□e □lower s□all □e sto□□ed.

F. A□□ s□□tra□t□o□ o□a s□□se□□e□t la□ □lower s□o□ld □ollow 3.A t□ro□□□ 3.F.

DYNAMIC SAFETY: THE TURBO CONTROL SYSTEM.

Rapid response times. Secure protection against surge and choke limits. Real-time transparency and documentation of all relevant operational parameters. The precise control of a turbo comes with its own set of requirements. This is the reason we decided against standard solutions and developed software especially for our high-efficiency turbos. The result is a fully integrated digital system. Highly functional. Easy to manage via touchscreen. And equipped with all relevant interfaces, such as to your process control system.

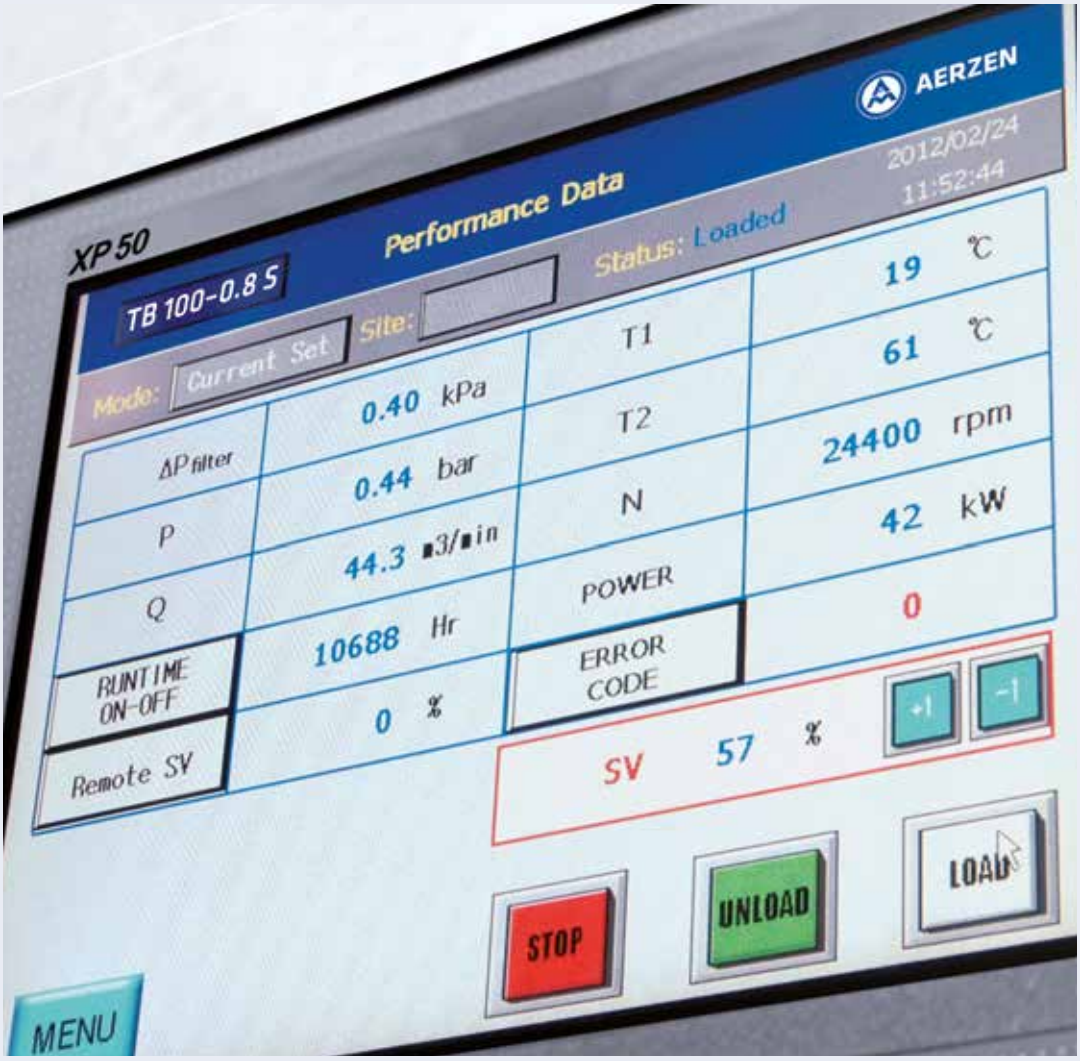

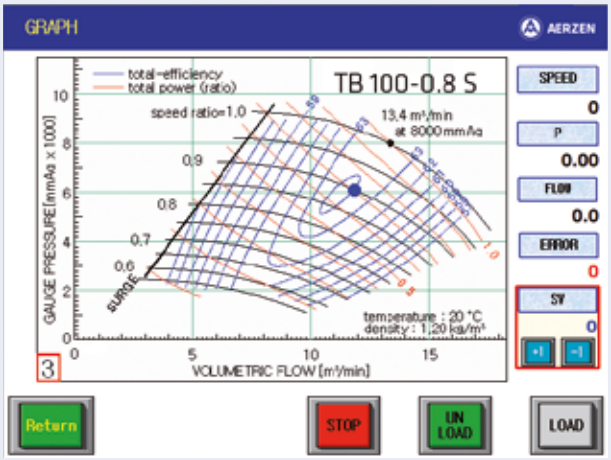

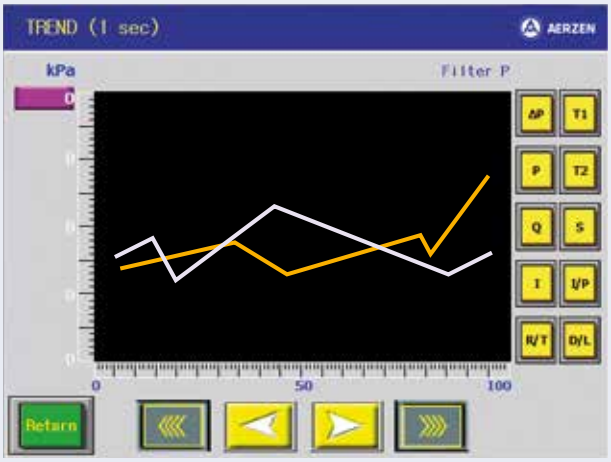

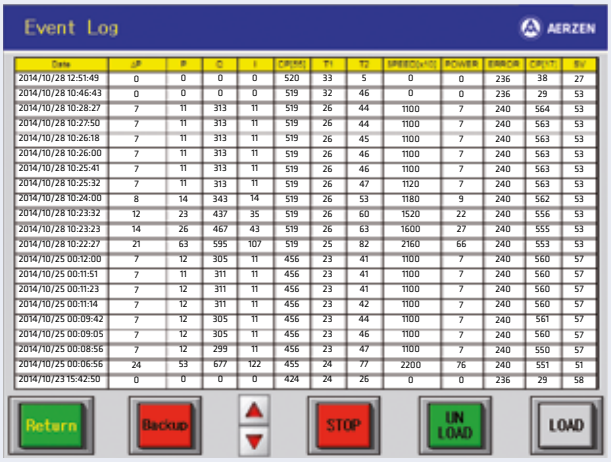

Unique: the turbo idle mode.
The construction of the AERZEN air foil bearing allows for extremely low rotation speeds. This means that frequent startups and shutdowns during intermittent processes can be avoided with the energy-saving idle mode.

One of many options among the Aerzen Turbo controls.

Real-time transparency:
The Aerzen Turbo control integrates all Turbo blower parameters with permissible minimum and maximum values (surge limit, maximum RPM, overload, etc.):

- Filter pressure differential
- Differential pressure
- Volume flow
- Intake and discharge temperatures
- RPM
- Electric power
- Operating hours
- Error codes and error history
- Live visualization of operational data

New: actual air volume measurement.
When it comes to absolutely secure plant operation, we don't allow any compromises. That is why AERZEN doesn't rely on conventional, indirect (i.e. air volume measurement derived from power consumption) air volume measurement. Instead, we use the Venturi effect. In other words, the actual air vol-ume flow is calculated by measuring the pressure differences at the intake cone. No other system does this, despite some decisive advantages: the unit can use real values for safety measures such as the AERZEN high rise to surge (active pump protection). And you can determine the air actually being pumped into your tanks at any given time. And by the way: the software will also display this parameter for you directly.

ELECTRICAL DATA

	AT200-0.8S / AT200-1.0S
INCOMING POWER REQUIREMENTS	460VAC, 3ϕ, 60Hz
MAIN MOTOR RATING	200HP (150kW)
RATED INPUT CURRENT	230A @460V
CIRCUIT BREAKER RATING	350A
CIRCUIT BREAKER INTERRUPTING CAPACITY	65kA
SHORT CIRCUIT CURRENT RATING	10kA

PANEL FEATURES

INVERTER	AERZEN TURBO IG5
TURBO CONTROLLER	AERZEN TURBO CONTROLLER WITH CPU PROCESSOR
HMI (HUMAN-MACHINE INTERFACE)	TOUCH SCREEN HMI WITH EMERGENCY STOP
REMOTE CONTROL OPTIONS	HARDWIRE FIELDBUS PROTOCOLS WITH OPTIONAL COMMUNICATOR: EtherNet/IP Modbus RTU Modbus TCP PROFIBUS PROFINET DeviceNet

SHOWN ACCESSORY

PASSIVE HARMONIC FILTER	IEEE 519 COMPLIANT HARMONIC FILTER WITH CONTACTOR

NOTICE:
THIS DRAWING AND ALL INFORMATION HEREIN IS THE PROPERTY OF AERZEN USA INC. AND ITS SUBSIDIARIES AND SHALL NOT BE REPRODUCED BY ANY MEANS IN WHOLE OR IN PART OR USED AS THE BASIS FOR MANUFACTURE WITHOUT WRITTEN PERMISSION.

AERZEN USA CORP.
108 Independence Way, COATESVILLE PA 19320
(610) 380-0244 PH, (610) 380-0278 FX

TITLE
AERZEN G5plus
AT200 SERIES
ELECTRICAL WIRING DIAGRAM

DATE	DRAWN BY:	CHECKED BY:	P.M. APPROVAL:	SCALE:
09/26/2019	HP	JPS	JS	MODEL SPACE 1 :1

DRAWING NO:	REVISION NO:	REVISION DATE:	SHEET:
IB-007811-200	A	03/23/21	1 of 15

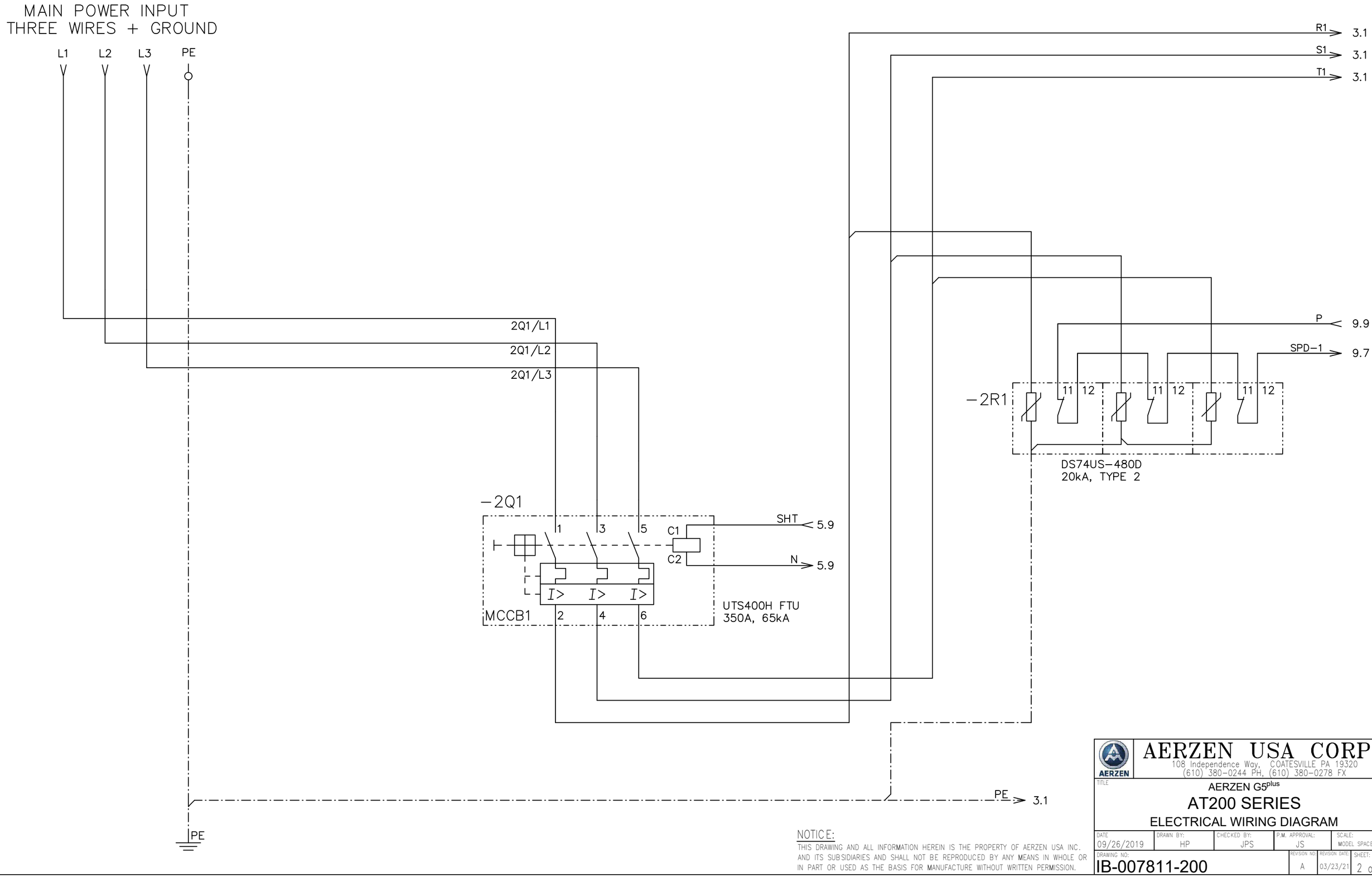

NOTICE:

THIS DRAWING AND ALL INFORMATION HEREIN IS THE PROPERTY OF AERZEN USA INC. AND ITS SUBSIDIARIES AND SHALL NOT BE REPRODUCED BY ANY MEANS IN WHOLE OR IN PART OR USED AS THE BASIS FOR MANUFACTURE WITHOUT WRITTEN PERMISSION.

AERZEN USA CORP.
108 Independence Way, COATESVILLE PA 19320
(610) 380−0244 PH, (610) 380−0278 FX

TITLE

AERZEN G5plus

AT200 SERIES

ELECTRICAL WIRING DIAGRAM

DATE	DRAWN BY:	CHECKED BY:	P.M. APPROVAL:	SCALE:
09/26/2019	HP	JPS	JS	MODEL SPACE 1 :1

DRAWING NO:	REVISION NO:	REVISION DATE:	SHEET:
IB-007811-200	A	03/23/21	2 of 15

2.9 R1
2.9 S1
2.9 T1

R1 → 4.1
S1 → 4.1
T1 → 4.1

R33 → 5.1 BOV
S33 → 5.1 SOLENOID

−3F1
ATM6
600V, 6A
1 1
F1 F2
2 2

R2 S2
−3T1
1L 1N
PE
2L 2N
PE
CONTROL TR.
OUT: 220VAC
1kVA
R3 S3

L N
220VAC
−3T3
PE
24VDC
PRO ECO 240W
24VDC, 10A
+ −

<OPTIONAL>
DC UPS AND BATTERY MODULE
*SHEET 3 IS REPLACED WITH SHEET 13
WHEN UPS OPTION IS APPLIED

−X0
1
3

−X1
1
2

P → 4.1 IG5
N → 4.1 −X1
P → 6.2 ANYBUS
N → 6.2 GATEWAY
(OPTIONAL)

−X1
2
4

3
4

P → 6.1 HMI
N → 6.1
P → 9.1 −9K6
N → 9.1

5

P → 7.1 SV ISO
P → 7.1 PV ISO
P → 8.1 I/O BOARD

4

P → 9.1 MOTOR T.S.
P → 9.1 ST

11
12

P → 5.1 EMERGENCY
N → 5.1 STOP

FAN+ → 8.7
FAN− → 8.7
14

R3 1 S3 3
−3F3
CP2
CP30−BA−5A
220VAC, 5A
2 4
11
R31 S31

R3 1 S3 3
−3F2
CP1
CP30−BA−5A
220VAC, 5A
2 4

11
−8K11
14
R31−1 S31
4.9 4.9

R30 S30
PE 1 2
PE (LINE)
−3T2
NF2010A−SUM
PE (LOAD)
PE 3 4

2.7 PE
PE → 4.1

NOTICE:
THIS DRAWING AND ALL INFORMATION HEREIN IS THE PROPERTY OF AERZEN USA INC. AND ITS SUBSIDIARIES AND SHALL NOT BE REPRODUCED BY ANY MEANS IN WHOLE OR IN PART OR USED AS THE BASIS FOR MANUFACTURE WITHOUT WRITTEN PERMISSION.

AERZEN USA CORP.
108 Independence Way, COATESVILLE PA 19320
(610) 380−0244 PH, (610) 380−0278 FX

TITLE
AERZEN G5plus
AT200 SERIES
ELECTRICAL WIRING DIAGRAM

DATE:	DRAWN BY:	CHECKED BY:	P.M. APPROVAL:	SCALE:
09/26/2019	HP	JPS	JS	MODEL SPACE 1 :1

DRAWING NO:	REVISION NO:	REVISION DATE:	SHEET:
IB-007811-200	A	03/23/21	3 of 15

1	2	3	4	5	6	7	8	9

3.9 R1
3.9 S1
3.9 T1

<OPTIONAL>
INTEGRATED AC LINE REACTOR
*SHEET 4 IS REPLACED WITH SHEET 15
WHEN LINE REACTOR OPTION IS APPLIED

3.7 PE

−4U1

−X14 | L1 | L2 | L3
1 USB

−X1
1
2
3 0V
4 24V

AERZEN IG5
VFD

ID 0

−X74
1
2 RX
3 TX
4
5 GND

3.9 N → N
3.9 P → P

−X10
SAFE/A → 1 SAFE/A
2
SAFE/B → 3 SAFE/B
4
5
24V/INT → 6 24V

−X72
L 1
N 2
PE 3
4
5
6

RD → 2 → 6.2
WT → 3 → 6.2
BK
SG → 6.2
CPU

R31−1 → 3.2
S31 → 3.2

PE | U | V | W | −X17 | GND | GND TEMP | 14 | 15 | 16

CN2
GROUND
CP−
CP+

U1 V1 W1
M 3~
TURBO BLOWER

PT1000 MOTOR
TEMPERATURE SENSOR

PE → 5.1

NOTICE:
THIS DRAWING AND ALL INFORMATION HEREIN IS THE PROPERTY OF AERZEN USA INC. AND ITS SUBSIDIARIES AND SHALL NOT BE REPRODUCED BY ANY MEANS IN WHOLE OR IN PART OR USED AS THE BASIS FOR MANUFACTURE WITHOUT WRITTEN PERMISSION.

AERZEN USA CORP.
108 Independence Way, COATESVILLE PA 19320
(610) 380−0244 PH, (610) 380−0278 FX

TITLE
AERZEN G5plus
AT200 SERIES
ELECTRICAL WIRING DIAGRAM

DATE	DRAWN BY:	CHECKED BY:	P.M. APPROVAL:	SCALE:
09/26/2019	HP	JPS	JS	MODEL SPACE 1 :1

DRAWING NO:	REVISION NO:	REVISION DATE:	SHEET:
IB-007811-200	A	03/23/21	4 of 15

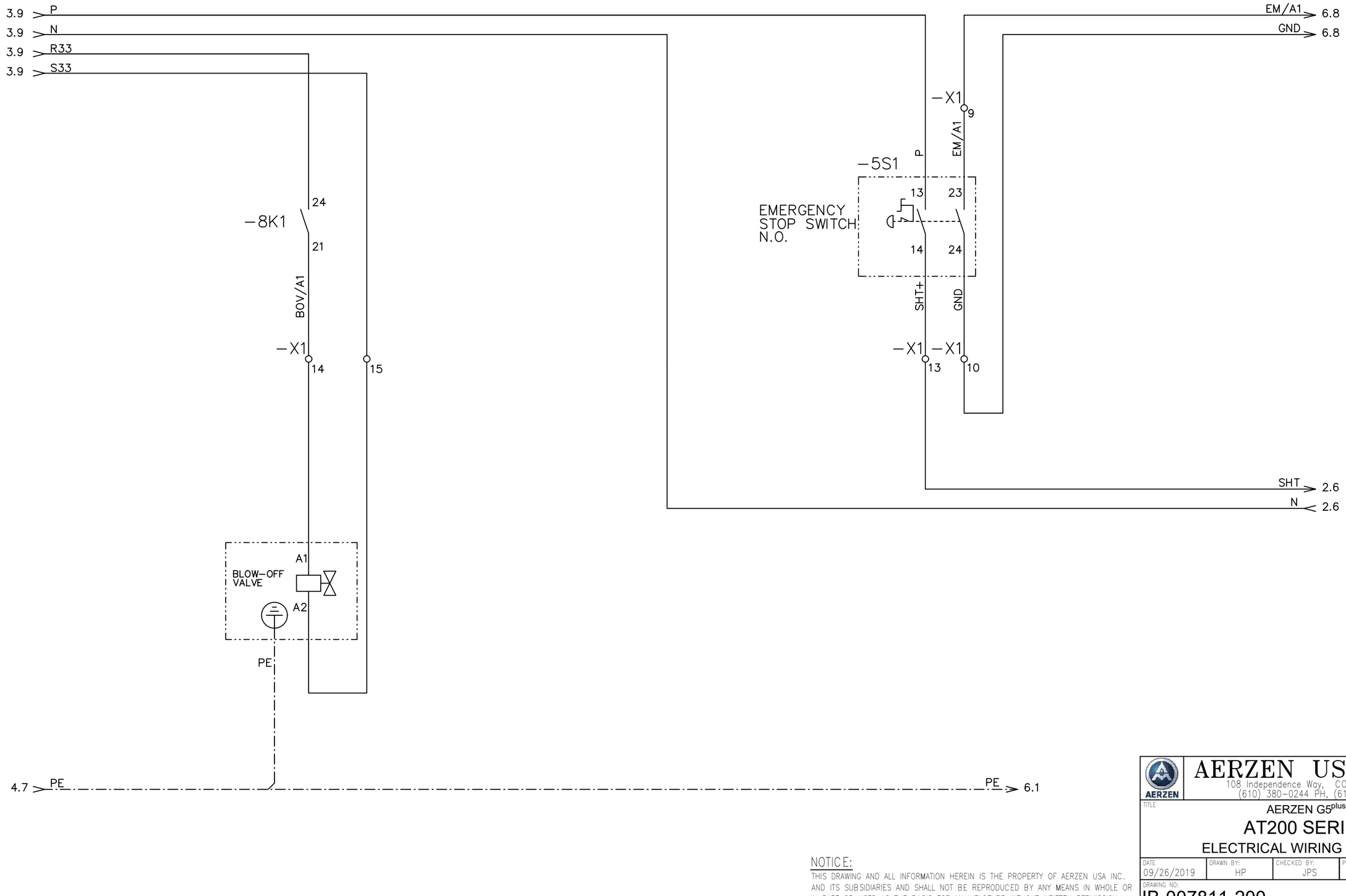

NOTICE:

THIS DRAWING AND ALL INFORMATION HEREIN IS THE PROPERTY OF AERZEN USA INC. AND ITS SUBSIDIARIES AND SHALL NOT BE REPRODUCED BY ANY MEANS IN WHOLE OR IN PART OR USED AS THE BASIS FOR MANUFACTURE WITHOUT WRITTEN PERMISSION.

AERZEN USA CORP.
108 Independence Way, COATESVILLE PA 19320
(610) 380−0244 PH, (610) 380−0278 FX

TITLE

AERZEN G5plus

AT200 SERIES

ELECTRICAL WIRING DIAGRAM

DATE	DRAWN BY:	CHECKED BY:	P.M. APPROVAL:	SCALE:
09/26/2019	HP	JPS	JS	MODEL SPACE 1 :1

DRAWING NO:	REVISION NO:	REVISION DATE:	SHEET:
IB-007811-200	A	03/23/21	5 of 15

1	2	3	4	5	6	7	8	9

5.7 PE

3.9 P

3.9 N

−6A2 HMI

+24V

−24V

FG

RS−232C

2 Rx

3 Tx

5 GND

10/100 BASE−T

USB

EXTERNAL USB PORT

−6A3 ETHERNET SWITCH

5 4 3 2 1

+24V P 3.9

0V N 3.9

PE PE

CPU I/F

CPU I/F

−6A1 ATM−CPU−V06x

P5 P4 P3 P2

<OPTIONAL> COMMUNICATION GATEWAY

−6A4 ANYBUS COMMUNICATOR

3.9 P + +24VDC

3.9 N − GND

FIELDBUS A

FOR CUSTOMER SYSTEM FIELDBUS

SUBNET

Tx 3 — 3

Rx 2 — 2

GND 5 — 5

NOTE:	
AB7072	EtherNet/IP
AB7010	Modbus RTU
AB7072	Modbus TCP
AB7000	PROFIBUS
AB7013	PROFINET
AB7001	DeviceNet

(FIELDBUS REMOTE OPERATION)

−X1 16

−9K8 −9K9 −9K10

11 12 11 12 11 12

J1−1 M/OT/A+ 1

J1−2 UPS/A140 2

J1−3 M/OT/E+ 3

J1−4

J1−5

J1−6 EM/A1 6

J1−7

J1−8 ERR257

J1−9 GND 8 9

EM/A1 5.9

GND 5.9

J5−1 J5−2 J5−3

4.9 SG BK J5−4 4 GND

4.9 3 WT J5−5 5 RX

4.9 2 RD J5−6 6 TX

J3−1 J3−2 J3−3 J3−4 J3−5

J6−1 J6−2 J6−3 J6−4 J6−5 J6−6 J6−7 J6−8

<OPTIONAL>

DC UPS AND BATTERY MODULE

*SHEET 6 IS REPLACED WITH SHEET 14 WHEN UPS OPTION IS APPLIED

NOTICE:

THIS DRAWING AND ALL INFORMATION HEREIN IS THE PROPERTY OF AERZEN USA INC. AND ITS SUBSIDIARIES AND SHALL NOT BE REPRODUCED BY ANY MEANS IN WHOLE OR IN PART OR USED AS THE BASIS FOR MANUFACTURE WITHOUT WRITTEN PERMISSION.

AERZEN USA CORP.
108 Independence Way, COATESVILLE PA 19320
(610) 380−0244 PH, (610) 380−0278 FX

TITLE

AERZEN G5plus

AT200 SERIES

ELECTRICAL WIRING DIAGRAM

DATE	DRAWN BY:	CHECKED BY:	P.M. APPROVAL:	SCALE:
09/26/2019	HP	JPS	JS	MODEL SPACE 1 :1

DRAWING NO:	REVISION NO:	REVISION DATE:	SHEET:
IB-007811-200	A	03/23/21	6 of 15

1	2	3	4	5	6	7	8	9

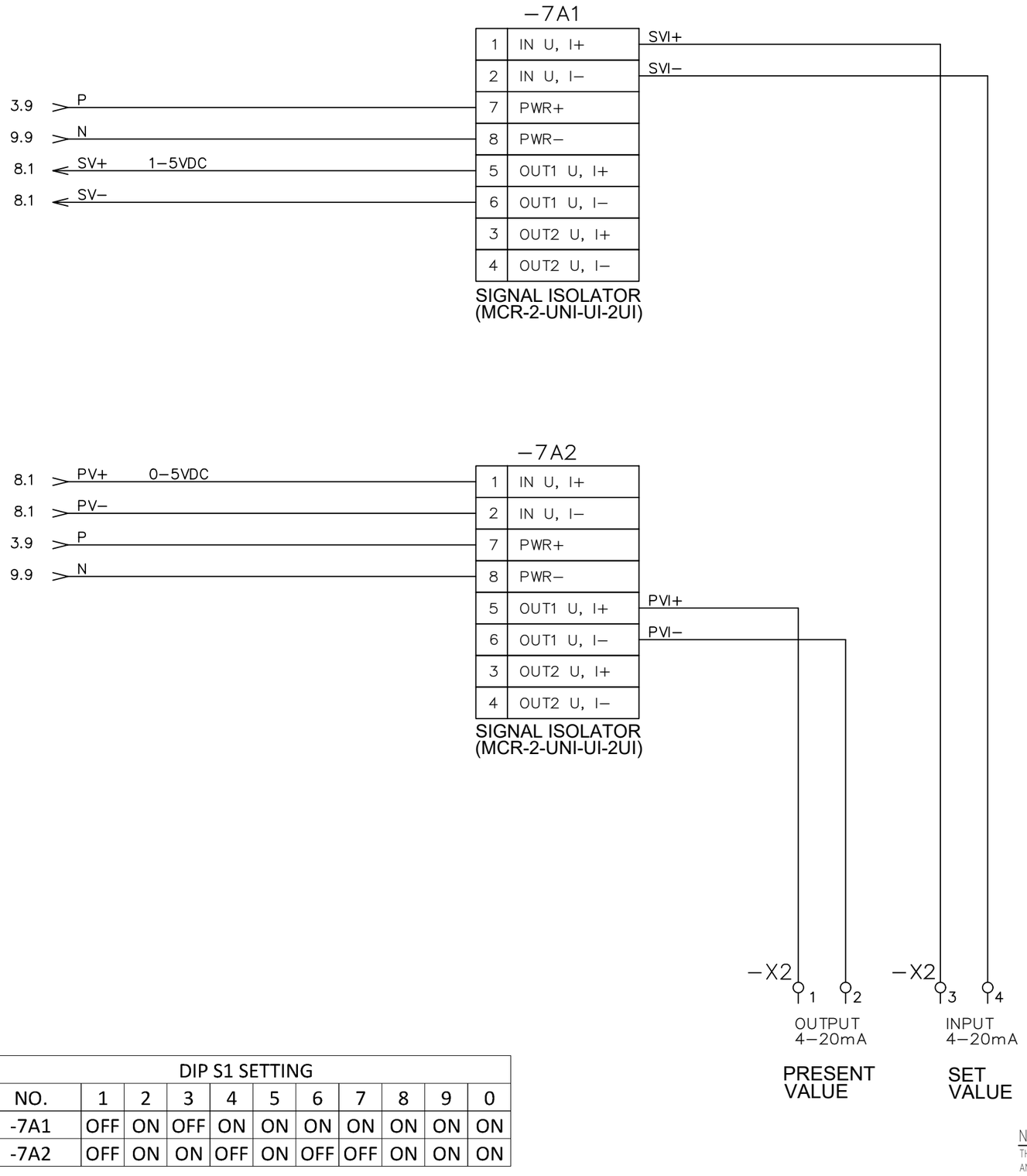

DIP S1 SETTING										
NO.	1	2	3	4	5	6	7	8	9	0
-7A1	OFF	ON	OFF	ON	ON	ON	ON	ON	ON	ON
-7A2	OFF	ON	ON	OFF	ON	OFF	OFF	ON	ON	ON

NOTICE:
THIS DRAWING AND ALL INFORMATION HEREIN IS THE PROPERTY OF AERZEN USA INC. AND ITS SUBSIDIARIES AND SHALL NOT BE REPRODUCED BY ANY MEANS IN WHOLE OR IN PART OR USED AS THE BASIS FOR MANUFACTURE WITHOUT WRITTEN PERMISSION.

AERZEN USA CORP.
108 Independence Way, COATESVILLE PA 19320
(610) 380−0244 PH, (610) 380−0278 FX

TITLE
AERZEN G5plus
AT200 SERIES
ELECTRICAL WIRING DIAGRAM

DATE:	DRAWN BY:	CHECKED BY:	P.M. APPROVAL:	SCALE:
09/26/2019	HP	JPS	JS	MODEL SPACE 1 :1

DRAWING NO:	REVISION NO:	REVISION DATE:	SHEET:
IB-007811-200	A	03/23/21	7 of 15

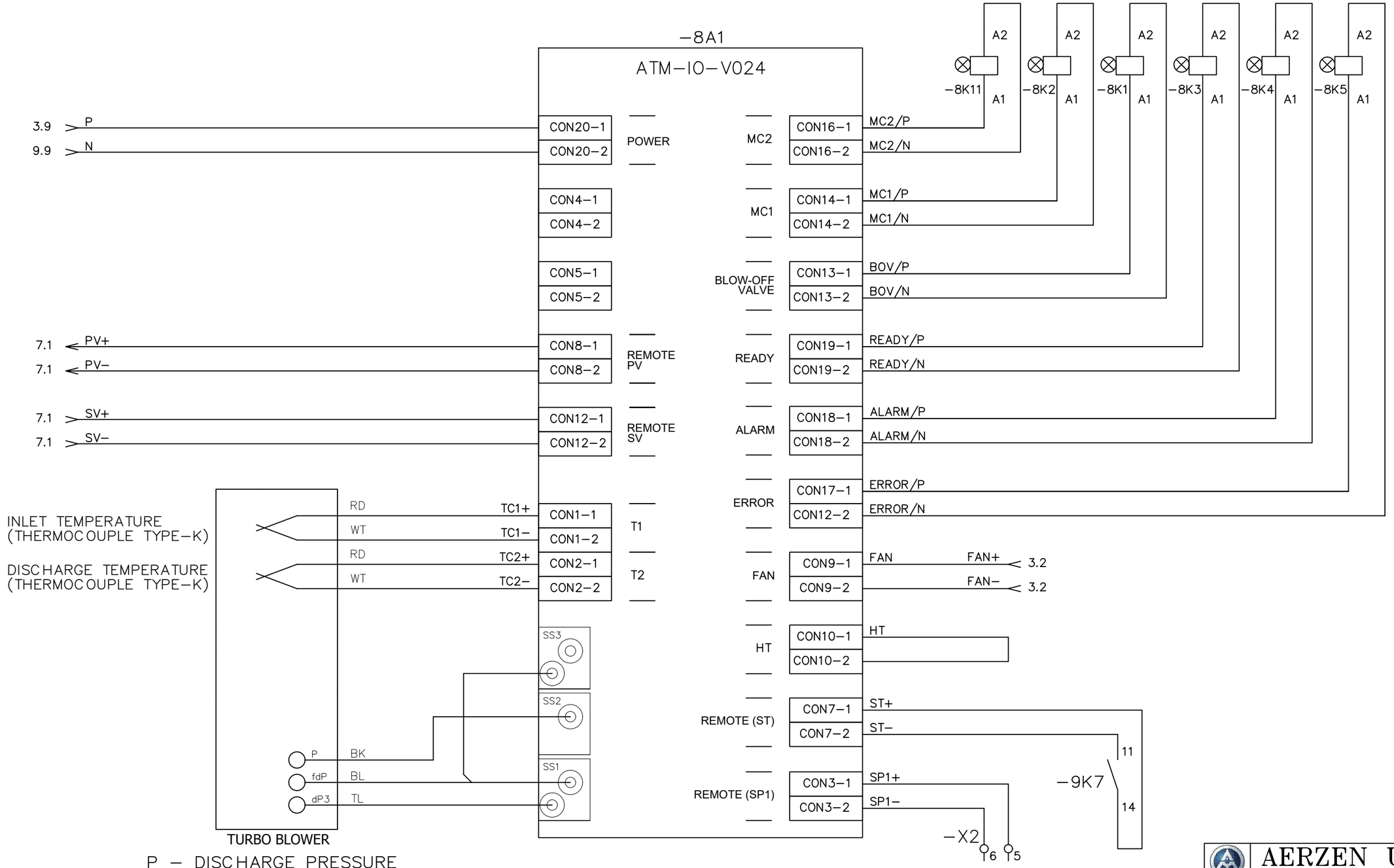

P − DISCHARGE PRESSURE
fdP − FILTER DIFFERENTIAL PRESSURE
dP3 − INLET NOZZLE DIFFERENTIAL PRESSURE

NOTICE:
THIS DRAWING AND ALL INFORMATION HEREIN IS THE PROPERTY OF AERZEN USA INC. AND ITS SUBSIDIARIES AND SHALL NOT BE REPRODUCED BY ANY MEANS IN WHOLE OR IN PART OR USED AS THE BASIS FOR MANUFACTURE WITHOUT WRITTEN PERMISSION.

AERZEN USA CORP.
108 Independence Way, COATESVILLE PA 19320
(610) 380−0244 PH, (610) 380−0278 FX

TITLE
AERZEN G5plus
AT200 SERIES
ELECTRICAL WIRING DIAGRAM

DATE	DRAWN BY:	CHECKED BY:	P.M. APPROVAL:	SCALE:
09/26/2019	HP	JPS	JS	MODEL SPACE 1 :1

DRAWING NO:	REVISION NO:	REVISION DATE:	SHEET:
IB-007811-200	A	03/23/21	8 of 15

1	2	3	4	5	6	7	8	9

MOTOR T. S. 3.9 — P

ST 3.9 — P

P → 2.9

N → 8.1

N → 7.1 PV ISO

N → 7.1 SV ISO

3.9 — N

3.9 — P

−9K6 A2 / A1

−9K7 A2 / A1

−9K8 A2 / A1

−9K9 A2 / A1

−9K10 A2 / A1

P → −X2 7

ST → −X2 8

MA/TH → −X1 7

ME/TH → −X1 8

SPD−1 → 2.9

FOR CUSTOMER SYSTEM
(HARDWIRE REMOTE OPERATION)
*SEE SHEET 11

CN1: 1 WT, 2 BN, 3 YL, 4 GN

WT — T180°C N.C. — WT

BL — T200°C N.C. — BL

TURBO MOTOR TEMPERATURE SWITCH

TURBO MOTOR TEMPERATURE SWITCH

NOTICE:
THIS DRAWING AND ALL INFORMATION HEREIN IS THE PROPERTY OF AERZEN USA INC. AND ITS SUBSIDIARIES AND SHALL NOT BE REPRODUCED BY ANY MEANS IN WHOLE OR IN PART OR USED AS THE BASIS FOR MANUFACTURE WITHOUT WRITTEN PERMISSION.

AERZEN USA CORP.
108 Independence Way, COATESVILLE PA 19320
(610) 380-0244 PH, (610) 380-0278 FX

TITLE
AERZEN G5plus
AT200 SERIES
ELECTRICAL WIRING DIAGRAM

DATE	DRAWN BY:	CHECKED BY:	P.M. APPROVAL:	SCALE:
09/26/2019	HP	JPS	JS	MODEL SPACE 1 :1

DRAWING NO:	REVISION NO:	REVISION DATE:	SHEET:
IB-007811-200	A	03/23/21	9 of 15

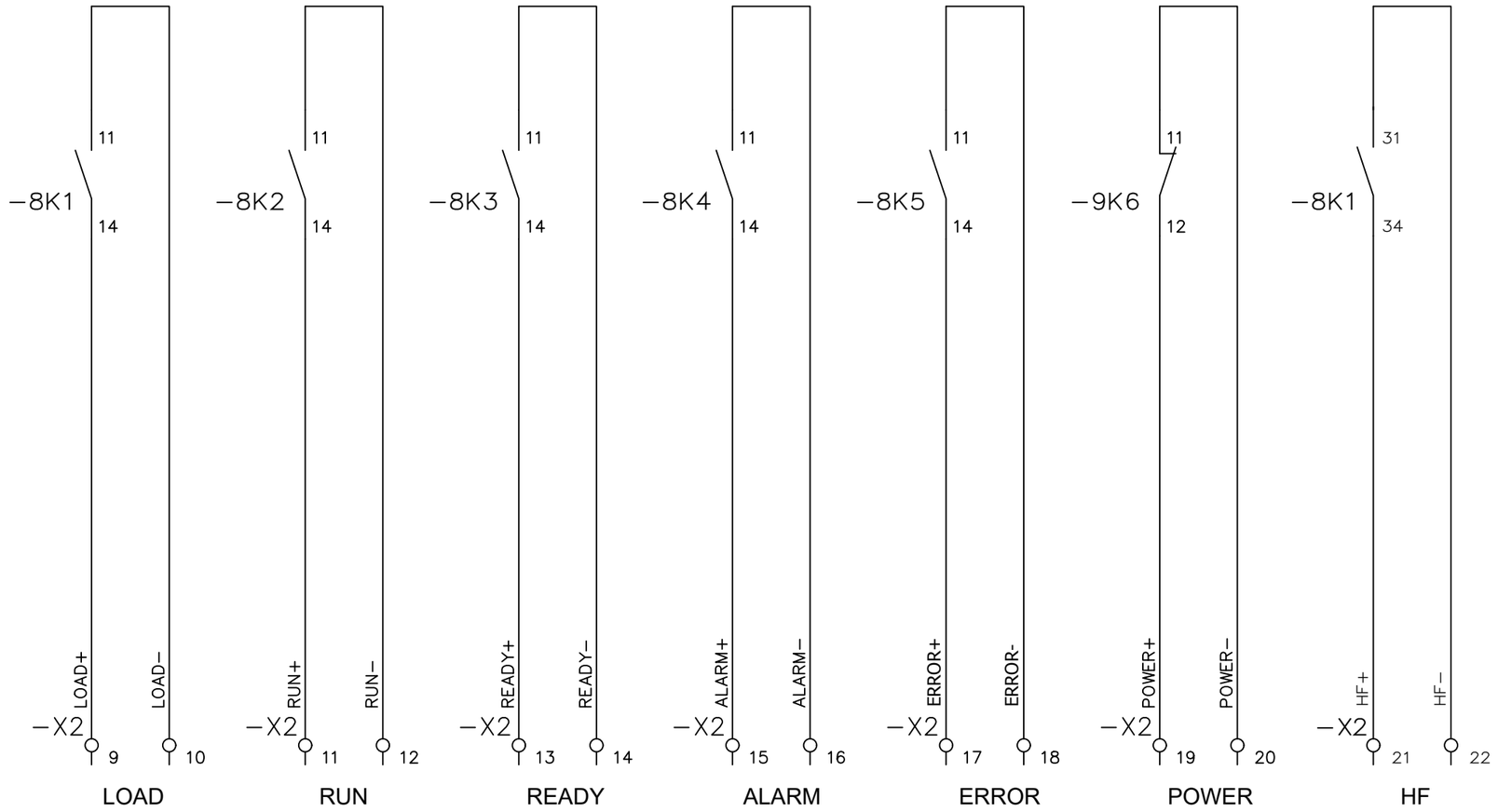

NOTICE:
THIS DRAWING AND ALL INFORMATION HEREIN IS THE PROPERTY OF AERZEN USA INC. AND ITS SUBSIDIARIES AND SHALL NOT BE REPRODUCED BY ANY MEANS IN WHOLE OR IN PART OR USED AS THE BASIS FOR MANUFACTURE WITHOUT WRITTEN PERMISSION.

AERZEN USA CORP.
108 Independence Way, COATESVILLE PA 19320
(610) 380-0244 PH, (610) 380-0278 FX

TITLE
AERZEN G5plus
AT200 SERIES
ELECTRICAL WIRING DIAGRAM

DATE	DRAWN BY:	CHECKED BY:	P.M. APPROVAL:	SCALE:
09/26/2019	HP	JPS	JS	MODEL SPACE 1 :1

DRAWING NO:	REVISION NO:	REVISION DATE:	SHEET:
IB-007811-200	A	03/23/21	10 of 15

1	2	3	4	5	6	7	8	9

AERZEN TURBO BLOWER | CUSTOMER FIELD WIRE

−X2
HARDWIRE I/F BLOCK

OUTPUT : PRESENT VALUE 4 - 20mA	OUTPUT 4 - 20mA	1	PVI+
		2	PVI-
INPUT : SET VALUE 4 - 20mA	INPUT 4 - 20mA	3	SVI+
		4	SVI-
INPUT : IDLE LOAD	N.O. UNLOAD	5	SP1+
		6	SP1-
INPUT : START	N.O. INPUT	7	P
		8	ST
OUTPUT : LOAD	LOAD	9	LOAD+
		10	LOAD-
OUTPUT : RUN	RUN	11	RUN+
		12	RUN-
OUTPUT : REMOTE READY	READY	13	READY+
		14	READY-
OUTPUT : ALARM	ALARM	15	ALARM+
		16	ALARM-
OUTPUT : ERROR	ERROR	17	ERROR+
		18	ERROR-
OUTPUT : POWER	N.C. CONTROL VOLTAGE MISSING	19	POWER+
		20	POWER-
	N.O. HARMONIC FILTER ON	21	HF+
		22	HF-

FIELD WIRING FOR HARDWIRE REMOTE OPERATION

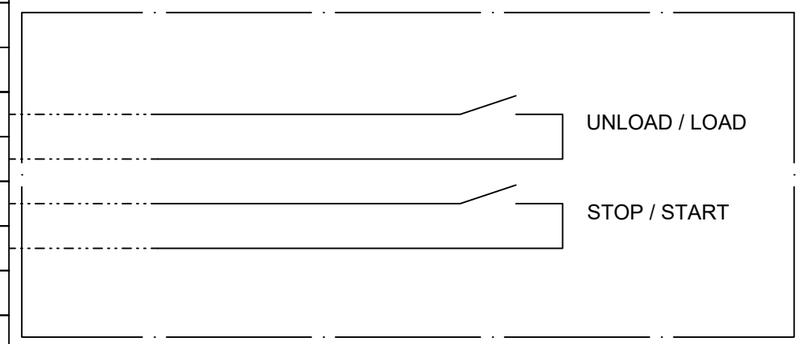

FIELD WIRING FOR HARMONIC FILTER

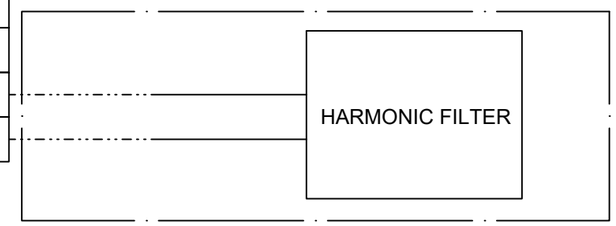

<NOTE>
CONTROL WIRES OF BYPASS CONTACT IN HARMONIC FILTER CAN BE CONNECTED TO TERMINAL 21 AND 22 OF -X2 TERMINAL BLOCK.
NOTE THAT SHUTTING OFF MAIN MCCB, -2Q1, DOES NOT CUT OFF 110V OF VOLTAGE APPLIED BETWEEN THE TWO CONTROL WIRES FROM THE HARMONIC FILTER.

NOTICE:
THIS DRAWING AND ALL INFORMATION HEREIN IS THE PROPERTY OF AERZEN USA INC. AND ITS SUBSIDIARIES AND SHALL NOT BE REPRODUCED BY ANY MEANS IN WHOLE OR IN PART OR USED AS THE BASIS FOR MANUFACTURE WITHOUT WRITTEN PERMISSION.

AERZEN USA CORP.
108 Independence Way, COATESVILLE PA 19320
(610) 380-0244 PH, (610) 380-0278 FX

TITLE
AERZEN G5plus
AT200 SERIES
ELECTRICAL WIRING DIAGRAM

DATE	DRAWN BY:	CHECKED BY:	P.M. APPROVAL:	SCALE:
09/26/2019	HP	JPS	JS	MODEL SPACE 1 :1

DRAWING NO:	REVISION NO:	REVISION DATE:	SHEET:
IB-007811-200	A	03/23/21	11 of 15

1	2	3	4	5	6	7	8	9

–X1
CONTROL TERMINAL BLOCK

1	+24VDC
2	0V
3	+24VDC
4	0V
5	+24VDC
6	+24VDC
7	MA/TH
8	ME/TH
9	EM/A1
10	GND
11	+24VDC
12	0V
13	SHT
14	BOV/A1
15	S33/220V
16	UPS/A140

NOTICE:
THIS DRAWING AND ALL INFORMATION HEREIN IS THE PROPERTY OF AERZEN USA INC. AND ITS SUBSIDIARIES AND SHALL NOT BE REPRODUCED BY ANY MEANS IN WHOLE OR IN PART OR USED AS THE BASIS FOR MANUFACTURE WITHOUT WRITTEN PERMISSION.

AERZEN USA CORP.
108 Independence Way, COATESVILLE PA 19320
(610) 380-0244 PH, (610) 380-0278 FX

TITLE
AERZEN G5plus
AT200 SERIES
ELECTRICAL WIRING DIAGRAM

DATE	DRAWN BY:	CHECKED BY:	P.M. APPROVAL:	SCALE:
09/26/2019	HP	JPS	JS	MODEL SPACE 1 :1

DRAWING NO:	REVISION NO:	REVISION DATE:	SHEET:
IB-007811-200	A	03/23/21	12 of 15

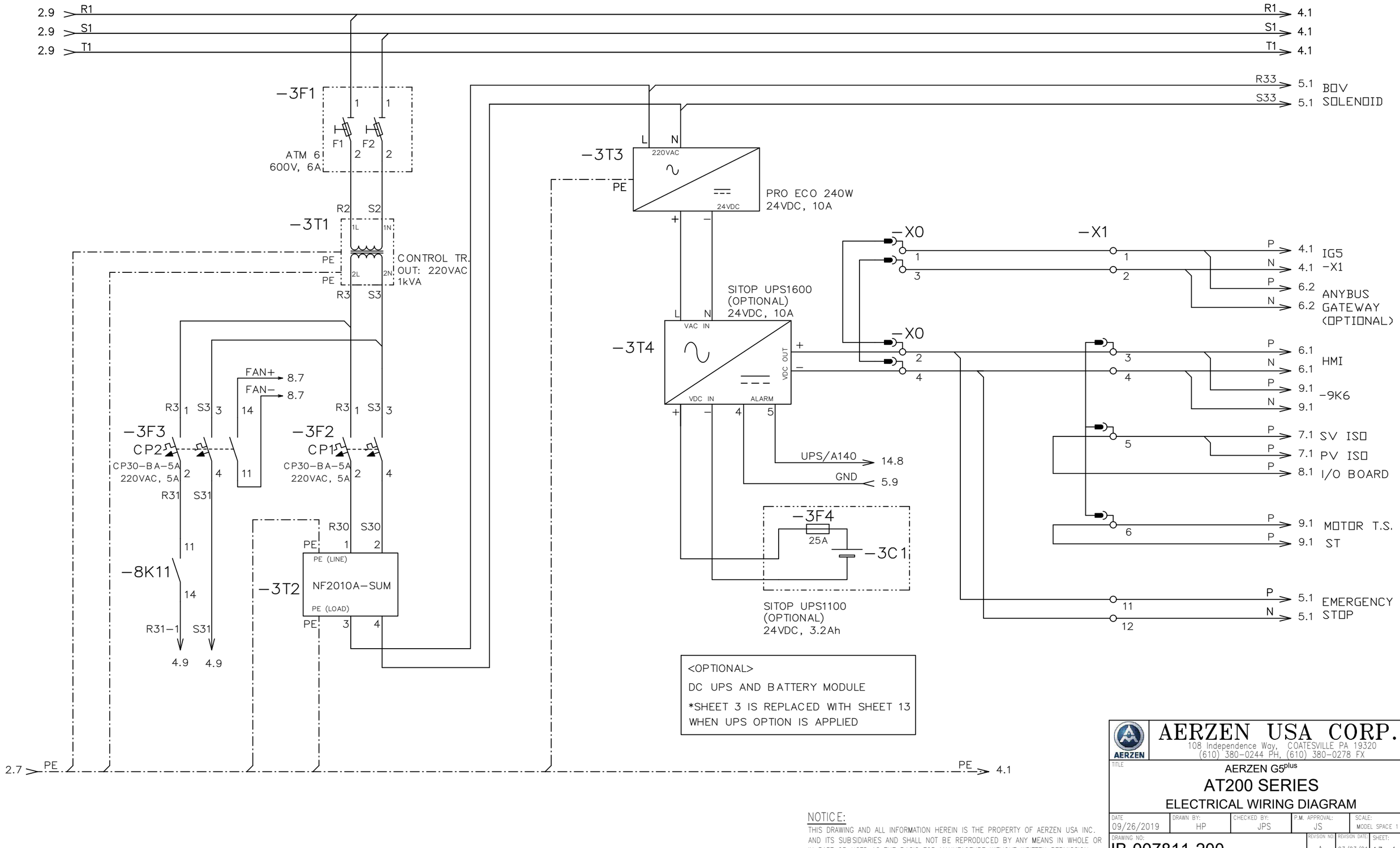

<OPTIONAL>

DC UPS AND BATTERY MODULE

*SHEET 3 IS REPLACED WITH SHEET 13 WHEN UPS OPTION IS APPLIED

NOTICE:

THIS DRAWING AND ALL INFORMATION HEREIN IS THE PROPERTY OF AERZEN USA INC. AND ITS SUBSIDIARIES AND SHALL NOT BE REPRODUCED BY ANY MEANS IN WHOLE OR IN PART OR USED AS THE BASIS FOR MANUFACTURE WITHOUT WRITTEN PERMISSION.

AERZEN USA CORP.
108 Independence Way, COATESVILLE PA 19320
(610) 380-0244 PH, (610) 380-0278 FX

TITLE

AERZEN G5plus

AT200 SERIES

ELECTRICAL WIRING DIAGRAM

DATE	DRAWN BY:	CHECKED BY:	P.M. APPROVAL:	SCALE:
09/26/2019	HP	JPS	JS	MODEL SPACE 1 :1

DRAWING NO:	REVISION NO:	REVISION DATE:	SHEET:
IB-007811-200	A	03/23/21	13 of 15

1	2	3	4	5	6	7	8	9

5.7 PE

3.9 P

3.9 N

−6A2 HMI

+24V
−24V
FG

RS−232C

2 Rx
3 Tx
5 GND

10/100 BASE−T

USB

EXTERNAL USB PORT

−6A3 ETHERNET SWITCH

5
4
3
2
1

+24V P 3.9
0V N 3.9
PE PE

CPU I/F

CPU I/F

−6A1 ATM−CPU−V06x

P5
P4
P3
P2

J1−1 M/OT/A+ 1
J1−2 UPS/A140 2
J1−3 M/OT/E+ 3
J1−4
J1−5
J1−6 EM/A1 6
J1−7
J1−8 ERR257 8
J1−9 GND 9

J5−1
J5−2
J5−3
J5−4 GND 4
J5−5 RX 5
J5−6 TX 6

J3−1
J3−2
J3−3
J3−4
J3−5

J6−1
J6−2
J6−3
J6−4
J6−5
J6−6
J6−7
J6−8

<OPTIONAL> COMMUNICATION GATEWAY

−6A4 ANYBUS COMMUNICATOR

3.9 P → + +24VDC
3.9 N → − GND

SUBNET
Tx 3 → 3
Rx 2 → 2
GND 5 → 5

FIELDBUS
A

FOR CUSTOMER SYSTEM FIELDBUS

NOTE:	
AB7072	EtherNet/IP
AB7010	Modbus RTU
AB7072	Modbus TCP
AB7000	PROFIBUS
AB7013	PROFINET
AB7001	DeviceNet

(FIELDBUS REMOTE OPERATION)

4.9 SG BK
4.9 3 WT
4.9 2 RD

11 −9K8 12
11 −9K9 12
11 −9K10 12

EM/A1 5.9

GND 5.9

−X1 16

UPS/A140 (OPTIONAL) 13.6

<OPTIONAL>
DC UPS AND BATTERY MODULE
*SHEET 6 IS REPLACED WITH SHEET 14 WHEN UPS OPTION IS APPLIED

NOTICE:
THIS DRAWING AND ALL INFORMATION HEREIN IS THE PROPERTY OF AERZEN USA INC. AND ITS SUBSIDIARIES AND SHALL NOT BE REPRODUCED BY ANY MEANS IN WHOLE OR IN PART OR USED AS THE BASIS FOR MANUFACTURE WITHOUT WRITTEN PERMISSION.

AERZEN USA CORP.
108 Independence Way, COATESVILLE PA 19320
(610) 380−0244 PH, (610) 380−0278 FX

TITLE
AERZEN G5plus
AT200 SERIES
ELECTRICAL WIRING DIAGRAM

DATE	DRAWN BY:	CHECKED BY:	P.M. APPROVAL:	SCALE:
09/26/2019	HP	JPS	JS	MODEL SPACE 1 :1

DRAWING NO:	REVISION NO:	REVISION DATE:	SHEET:
IB-007811-200	A	03/23/21	14 of 15

1	2	3	4	5	6	7	8	9

3.9 R1
3.9 S1
3.9 T1

−4T1
LINE REACTOR
(OPTIONAL)
R1 S1 T1
L1 L2 L3

<OPTIONAL>
INTEGRATED AC LINE REACTOR
*SHEET 4 IS REPLACED WITH SHEET 15
WHEN LINE REACTOR OPTION IS APPLIED

3.7 PE

−4U1
−X14 L1 L2 L3
1 USB
−X1
1
2
3 0V
4 24V
−X10
1 SAFE/A
2
3 SAFE/B
4
5
6 24V

AERZEN IG5
VFD

ID 0

−X74
1
RX 2
TX 3
4
GND 5

3.9 N → N
3.9 P → P

SAFE/A
SAFE/B
24V/INT

RD → 2 6.2
WT → 3 6.2
BK → SG 6.2
CPU

−X72
L 1
N 2
PE 3
4
5
6

R31−1 → 3.2
S31 → 3.2

PE U V W −X17 GND 14 GND 15 TEMP 16

CN2
GROUND
CP−
CP+

U1 V1 W1
M 3~
TURBO BLOWER

PT1000 MOTOR
TEMPERATURE SENSOR

PE → 5.1

NOTICE:
THIS DRAWING AND ALL INFORMATION HEREIN IS THE PROPERTY OF AERZEN USA INC. AND ITS SUBSIDIARIES AND SHALL NOT BE REPRODUCED BY ANY MEANS IN WHOLE OR IN PART OR USED AS THE BASIS FOR MANUFACTURE WITHOUT WRITTEN PERMISSION.

AERZEN USA CORP.
108 Independence Way, COATESVILLE PA 19320
(610) 380−0244 PH, (610) 380−0278 FX

TITLE
AERZEN G5plus
AT200 SERIES
ELECTRICAL WIRING DIAGRAM

DATE	DRAWN BY:	CHECKED BY:	P.M. APPROVAL:	SCALE:
09/26/2019	HP	JPS	JS	MODEL SPACE 1 :1

DRAWING NO:	REVISION NO:	REVISION DATE:	SHEET:
IB-007811-200	A	03/23/21	15 of 15

System Control Board

(ATM_CPU_V061 + ATM_IO_V024 + EZL-50M)

AT Series G4.5, AT Series G5

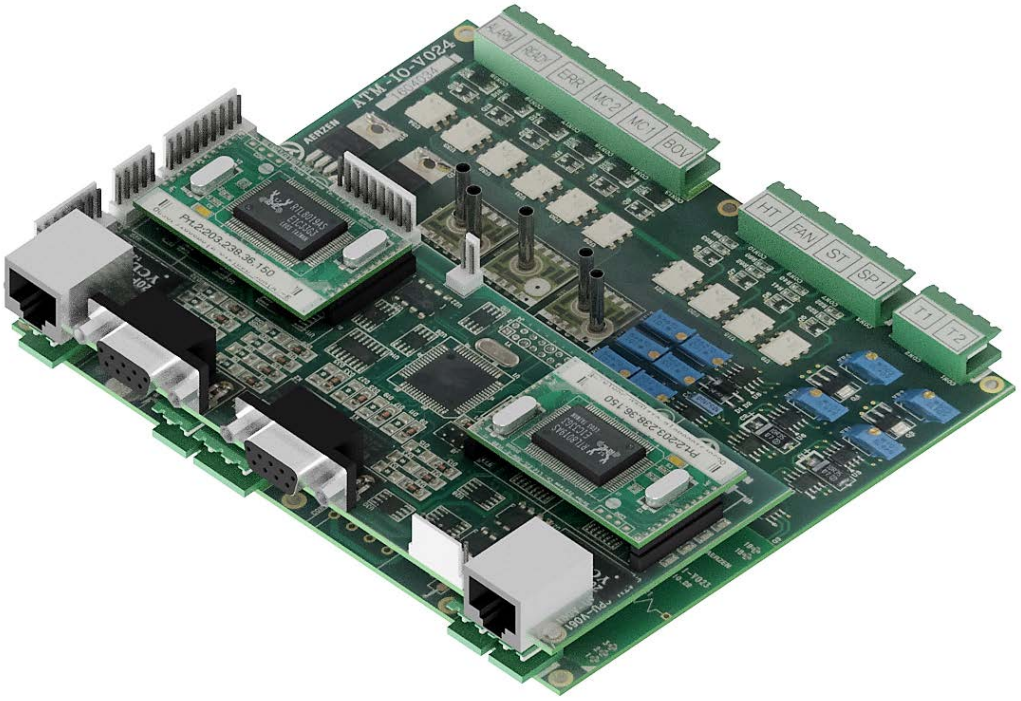

□o□te□ts

1. F□□□t□o□ des□r□□t□o□
   1.1 □e□eral
   1.2 A□□l□at□o□
   1.3 □ro□ert□es
   1.4 □te□ Data
   1.5 □□stallat□o□
2. Str□□t□re & □□ew
   2.1 Board Asse□ □l□
   2.2 CPU Board & Pin Arra□□e□ e□t
   2.3 □/O Board & Pin Arra□□e□ e□t
   2.4 □o□ □ □□□at□o□ □ard
3. Inp□t / O□t□□t □ort Des□r□□t□o□s
4. Re□ere□□e data
   4.1 F□r□ ware □ro□ra□ l□st
   4.2 Ma□□als

1. Function description

1.1 General

- ATM□□ □□□□06□□ATM□□O□□0□4□a□d □□L-□0M are □□Bs □r□□ted □r□□t □oards□□or t□e s□ste□ □o□troller o□Aer□e□ T□r□o □lowers
- □ser □o□trols Aer□e□ T□r□o □lower □□ o□erat□o□al □ode o□□□rre□t□Flow□□o□t□or DO t□ro□□□□ □M□□□o□ □ □□□□at□o□ a□d ter□ □□als
- Data a□□□□red □ro□ t□e t□r□o □lower □s tra□s□erred to □ser t□ro□□□□ □M□□□o□ □ □□□□at□o□ a□d ter□ □□al rela□s

1.2 Application

T□s s□ste□ □o□trol □oard set □s a□□l□ed to all t□e □e□erat□o□s o□Aer□e□ T□r□o □lowers □a□□□□ □ot□a □a□□ □otor a□d a □ool□□□ □otor

Compatibility Matrix

□□	Blower s□□e AT/TB	□ol□□e Flow □3/□	□ress□re □ □ar	□a□□a□e □e□erat□o□	
				□4.□	□□
□□□□	□□-0.8S	800	800		
□0□□	□0-0.6S	□□00	600		
	□0-0.8S	□□60	800		
□□□□	□□-0.6S	3000	600		
	□□-0.8S	□430	800		
□00□□	□00-0.6S	4□00	600		
	□00-0.8S	3□40	800		
	□00-□.0S	□□00	□000		
□□0□□	□□0-0.6S	□800	600	●	●
	□□0-0.8S	□□00	800	●	●
	□□0-□.0S	□□00	□000	●	●
□00□□	□00-0.6T	□0□00	600	●	
	□00-0.8S	8400	800	●	●
	□00-□.0S	6300	□000	●	●
300□□	300-0.6T	□□00	600	●	●
	300-0.8T	□□400	800	●	●
	300-□.0T	□600	□000	●	●
400□□	400-0.8T	□6□00	800	●	●

1.3 Properties

- 8-□t R□S□ □red□□ed □str□□t□□ set □o□ □□ter□Ar□□te□t□re M□ro□o□troller
- □□ to □6M□□S□□ □lo□ □str□□t□□s □er se□o□d □T□ro□□□□□t at □6M□□
- □□8□□□tes o□□□-S□ste□ Sel-□ro□ra□ □a□le Flas□ □ro□ra□ □e□or□
- 4□□□tes □□□ROM □or □o□trol □ara□eter□4□□□tes □□ter□al SRAM
- Wr□te/□rase □□□les: □0□000 Flas□ / □00□000 □□□ROM
- Data rete□t□o□: □0 □ears at 8□□□/□00 □ears at □□□□
- □6-□t T□□er/□o□□ters
- □0-□t AD□ □a□alo□-d□□tal □o□□erter□
- □□-□t DA□ □d□□tal-a□alo□ □o□□erter□
- □□□□t □ower □olta□es ra□□e: D□ □4□□□0□ □36□□
- □□□□t / O□t□□t □solat□o□ □ower
- D□□tal □□□□t □ort : □8 □□a□□els
- D□□tal o□t□□t □ort : □□ □□a□□els
- □ □□□-s□eed □o□□ter : □ □□a□□els
- A□alo□ □□□□t □ort : □4 □□a□□els
- A□alo□ o□t□□t : 4 □□a□□els
- □o□ □ □□□□at□o□: □ □□a□□els□LA□ or RS□3□□□

1.4 □te□ data

□te□ □o.	Des□r□□t□o□	Ma□□a□t□rer	Re□ar□s
04□-0300□□	□□B M□□ T□□e□□ □□ Board□ATM-□□□□□06□	A□R□□□ T□RBO	
04□-03003□	□□B M□□ T□□e□/O Board□ATM□/O□□0□4 wi□□□ □ress□re se□sors	A□R□□□ T□RBO	
04□-0300□□	□□B M□□ T□□e□/O Board□□TM□S□□□TB□□/O□□0□4 wi□o□t □ress□re se□sors	A□R□□□ T□RBO	
04□-0300□0	□o□ □ □□□□at□o□ Board □□L-□0	Sollae S□ste□s	

1.5 □□stallat□o□

T□e □oard □s □□stalled o□ t□e □o□trol □a□el □□s□de o□t□e □o□trol □a□□□et

□4.□ □a□□a□e

□□ □a□□a□e

2. Structure & View

2.1 Board Assembly

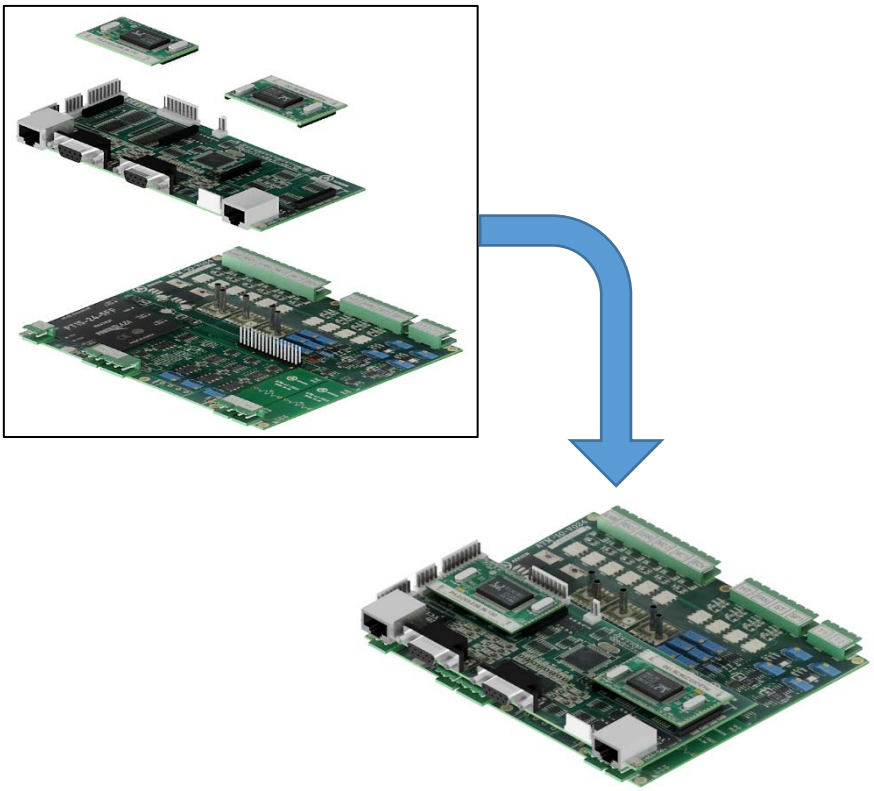

2.2 CPU Board & Pin Arrangement

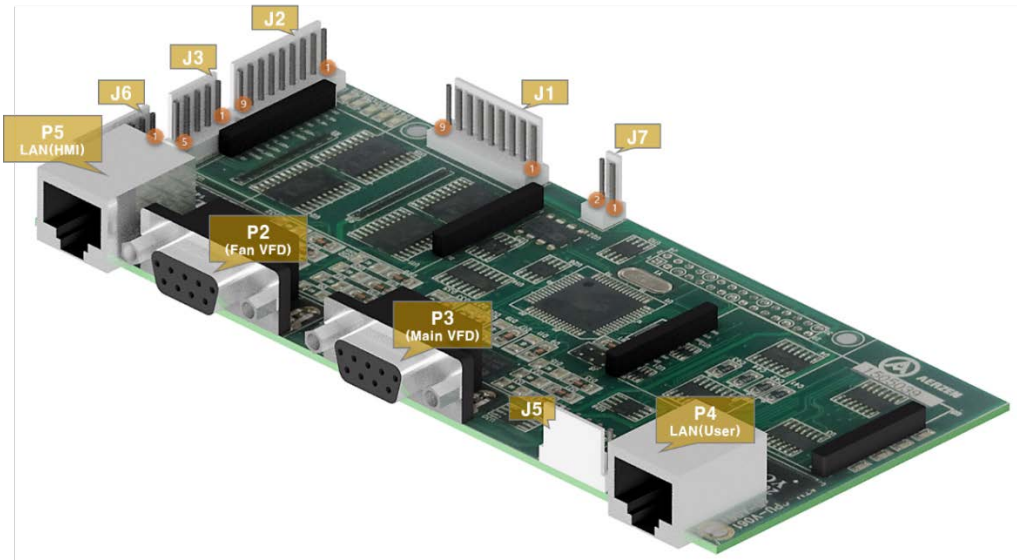

□o□□e□tor		Des□r□□t□o□	Re□ar□s
□a□e	T□□e		
□□	DS□B□□□□□□	A□alo□ O□t□□t D□□□tal □□□□t / O□t□□t □□□□:□□□-Sto□□DO□ □□□□:Set □al□e□□AO□ □□3: Set □al□e□-□AO□ □□4:□OM □□□□:□□□-Start□DO□ □□6:□□□-FR□□D□□ □□□□:□ □D □□8:□□□-TR□□□D□□ □□□□:□ □D	To Fa□ □□□erter
□3	DS□B□□□□□□	A□alo□ O□t□□t D□□□tal □□□□t / O□t□□t □□□□:□□□-Sto□□DO□ □□□□:Set □al□e□□AO□ □□3: Set □al□e□-□AO□ □□4:□OM □□□□:□□□-Start□DO□ □□6:□□□-FR□□D□□ □□□□:□ □D □□8:□□□-TR□□□D□□ □□□□:□ □D	To Ma□□ □□□erter
□4	R□4□	LA□ □o□ □ □□□□at□o□	To □ser □ort
□□	R□4□	LA□ □o□ □ □□□□at□o□	To □M□□ort
□□	□ST□□□□□□	D□□□tal □□□□t	

□□	□ST□□□□□□	D□□□tal O□t□□t	
□3	□ST□□□□□□	D□□□tal □□□□t	
□□	□ST□6□□□	□ART □o□ □ □□□□at□o□	RS□3□□
□6	□ST□8□□□□	A□alo□ □□□□t	
□□	□ST□□□□□□	A□alo□ O□t□□t	

2.3 I/O Board & Pin Arrangement

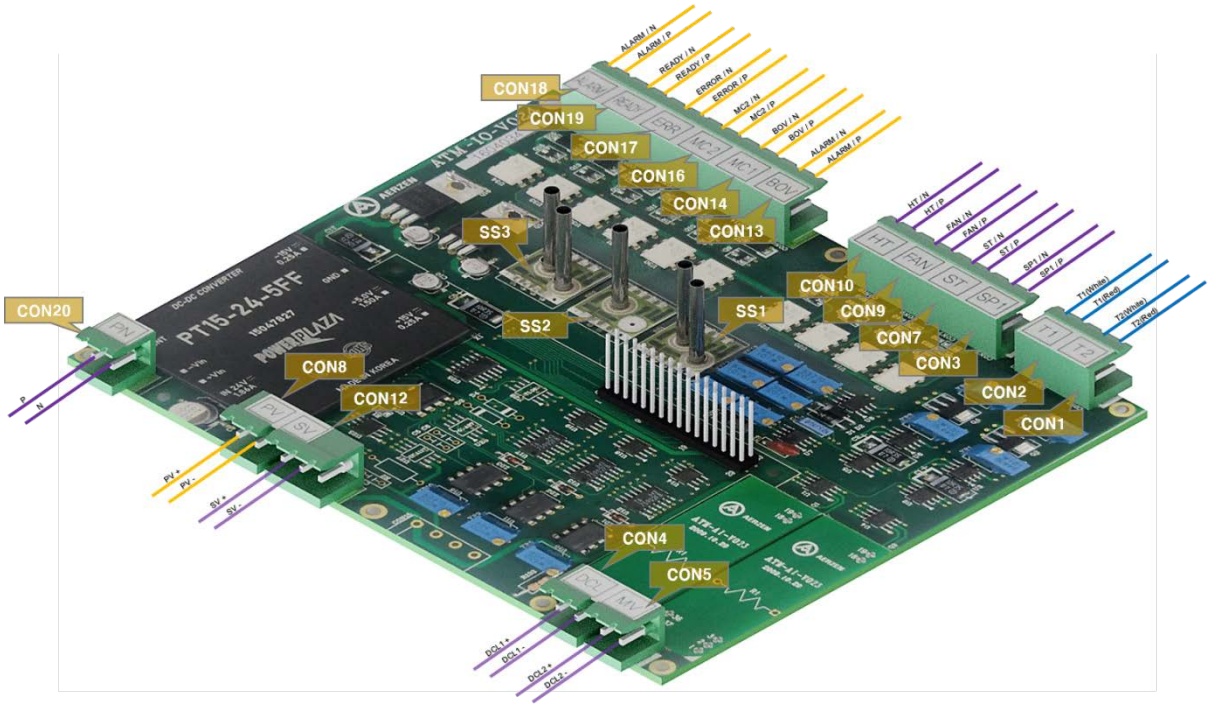

□o□□e□tor		Des□r□□t□o□	Re□ar□s
□a□e	La□el		
□O□□	T□	A□alo□ □□□□t	Te□ □erat□re Se□sor
□O□□	T□	A□alo□ □□□□t	Te□ □erat□re Se□sor
□O□3	S□□	D□□□tal □□□□t	
□O□4	D□L	A□alo□ □□□□t	
□O□□	M□	A□alo□ □□□□t	
□O□□	ST	D□□□tal □□□□t	
□O□8	□□	A□alo□ O□t□□t	
□O□□	FA□	D□□□tal □□□□t	
□O□□0	□T	D□□□tal □□□□t	
□O□ □□	S□	A□alo□ □□□□t	
□O□ □3	BO□	D□□□tal O□t□□t	
□O□ □4	M□□	D□□□tal O□t□□t	

□O□ □6	M□□	D□□tal O□t□□t	
□O□ □□	□RR	D□□tal O□t□□t	
□O□ □8	AL□ARM	D□□tal O□t□□t	
□O□ □□	R□AD□	D□□tal O□t□□t	
□O□ □0	□□	□ower S□□□l□	D□ □4□
SS□	D□3	D□□ere□tial □ress□re Se□sor	
SS□	O□□	D□s□□ar□e □ress□re Se□sor	
SS3	□d□	F□lter D□□ere□tial Se□sor	

2.4 Communication Card

□o□□e□tor		Des□r□□t□o□	Re□ar□s
□a□e	□□□		
□□□	□	□□D	LA□ □□ter□a□e
	□	T□□□□□□	
	3	T□□□□-	
	4	□□D	
	□	T□□O□T-	
	6	T□□O□T□	
	□	□□D	
	8	R□□L□D□	
	□	T□□L□D-	
	□0	L□□□L□D-	
	□□	STAT□S	
	□□	□□□□□□□	
□□□	□	□□□□□□□	RS□3□ □□ter□a□e
	□	RST□	
	3	□0	
	4	□□	
	□	□S□-	
	6	□□D	
	□	T□D	
	8	RTS	
	□	□□D	
	□0	R□D	
	□□	□TS	
	□□	□□D	

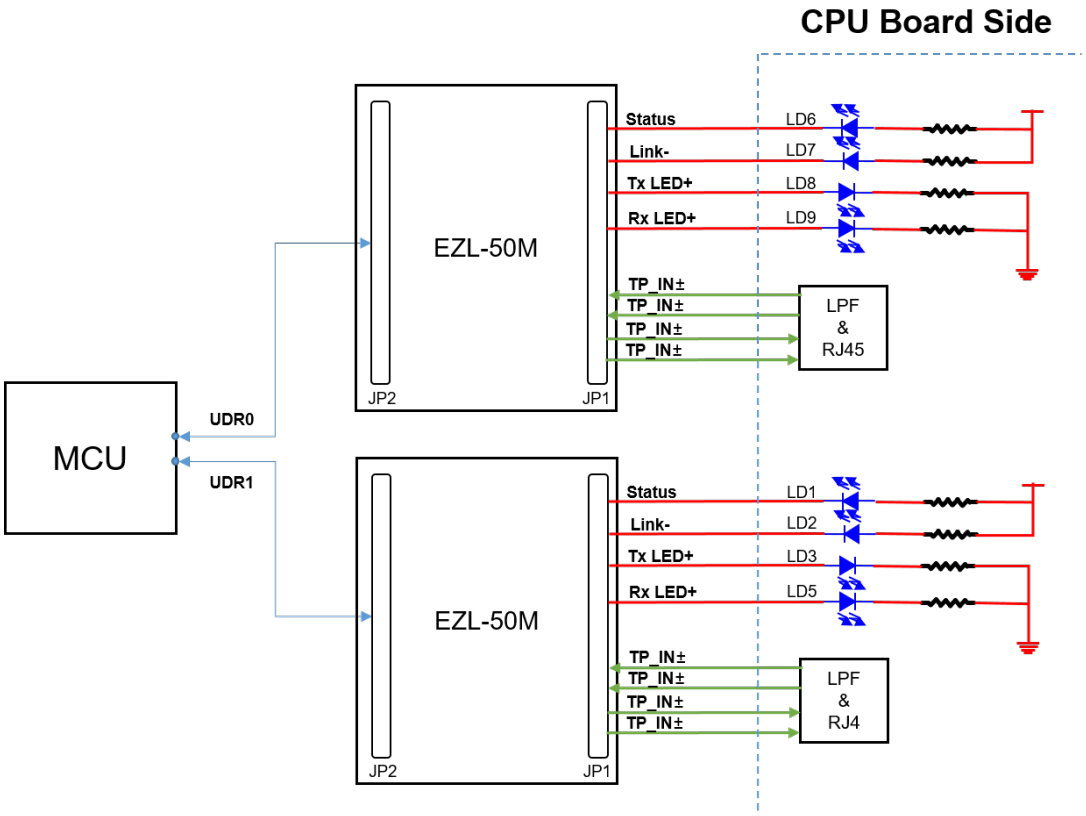

L□D		State	Stat□s
LD□ LD6	Stat□s	O□□	□ower o□□
		Flas□□□□	R□□□□□□
LD□ LD□	L□□□	O□□	O□□□□e
		O□	O□□□e
LD3 LD8	T□L□D	O□□Flas□□□□	Tra□s□ □ss□□ o□data
LD□ LD□	R□L□D	O□□Flas□□□□	Re□e□□□□ data

3. Input / Output Descriptions

T□□e	□ort □a□e		Re□ar□s
D□□□tal □□□□t	ST	Ter□ □□al Start	O□/OFF
	S□□	Ter□ □□al Load	O□/OFF
	□T	□eat s□□□ □rror	O□/OFF
	FA□	□eat s□□□ □ool□□□ Fa□ □rror	O□/OFF
	□3-□	Reser□e	O□/OFF
	□3-4	□□ter□al B□tto□	O□/OFF
	□3-3	□□ter□al B□tto□	O□/OFF
	□3-□	Reser□e	O□/OFF
	□□-□	Ma□□ Motor □80℃ War□□□	O□/OFF
	□□-8	Reser□e	O□/OFF
	□□-□	Ma□□ Motor □00℃ □rror	O□/OFF
	□□-6	Fa□ Motor □80℃ War□□□	O□/OFF
	□□-□	Fa□ Motor □00℃ □rror	O□/OFF
	□□-4	□□ er□e□□□ swt□□	O□/OFF
	□□-3	Reser□e	O□/OFF
	□□-□	□rd □a□lt	O□/OFF
	□3-8	Ma□□ □□ □ TR□□	O□/OFF
	□□-8	Fa□ □□ □ TR□□	O□/OFF
□ □□□-s□eed □o□□ter	□3-6	Ma□□ □□ □ FR□	□ □□□-s□eed □o□□ter
	□□-6	Fa□ □□ □ FR□	□ □□□-s□eed □o□□ter
D□□□tal O□t□□t	M□□	M□□□□re-□□ar□e□	Rela□
	M□□	M□□□Ma□□ □□ar□e□	Rela□
	BO□	BO□	Rela□
	Read□	Read□	Rela□
	Alar□	Alar□	Rela□
	□rror	□rror	Rela□
	□□-□	Reser□e	0/□□d□
	□□-8	Reser□e	0/□□d□
	□□-□	Reser□e	0/□□d□

	□□-6	Reser□e	0/□□d□
	□□-□	Reser□e	0/□□d□
	□□-4	Reser□e	0/□□d□
	□□-3	Reser□e	0/□□d□
	□3-□	Ma□□ □□□ STO□	□□B rela□□□□□ 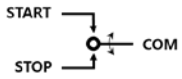
	□3-4	Ma□□ □□□ □OM	
	□3-□	Ma□□ □□□ START	
	□□-□	Fa□ □□□ STO□	□□B rela□□□□□ 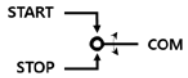
	□□-4	Fa□ □□□ □OM	
	□□-□	Fa□ □□□ START	
A□alo□ □□□t □□0□t□	AD□0□SS3□	□d□□Filter d□□ere□tial □ress□re□	□ress□re Ded□ated □r□□t
	AD□□□SS□□	o□□□Dis□□ar□e □ress□re□	□ress□re Ded□ated □r□□t
	AD□□□SS□□	d□3□D□□ere□tial □ress□re□	□ress□re Ded□ated □r□□t
	AD□3□T□□	T□□□□ta□e Te□ □erat□re□	Te□ □erat□re Ded□ated □r□□t
	AD□4□M□□	D□L□	0□□□d□
	AD□□□D□L□	D□L□	0□□□d□
	AD□6□S□□	re□otS□ or do□□□□	0□□□d□
	AD□□□T□□	T□□D□s□□ar□e Te□ □erat□re□	Te□ □erat□re Ded□ated □r□□t
	AD□□	Reser□e	0□□□d□
	AD□□0	Reser□e	0□□□d□
	AD□□□	Reser□e	0□□□d□
	AD□□□	Reser□e	0□□□d□
	AD□□3	Reser□e	0□□□d□
	AD□□4	Fa□D□L	0□□□d□
A□alo□ O□t□□t □□6□t□	DA□0□□3-□□3□	Ma□□ □□□ S□	0□□.□□A
	DA□□□□□□	□rese□t □al□e	0□□□d□
	DA□□□□□□-□□3□	Fa□ □□□ S□	0□□.□□A
	DA□3	□□	0□□□d□
□o□ □ □□□□at□o□	□DR0	LA□□□M□	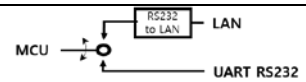
		□ART0	
	□DR□	LA□□□S□R	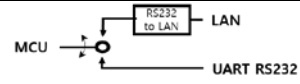
		□ART□	

4. Reference data

4.1 Firmware program list

- M□□
  Flas□ : AT06□□□□□.□e□
  □□□ROM : □□□ROM□□ □06□.□e□
- □o□ □ □□□□at□o□ □o□□erter
  □TOS□Mod□□s RT□□ : □le□□□□□□□□□□ od□□s□rt□.et□
  A□□□□s□□ro□□□□s D□-AB□000□ : ATB□□ro□□□□s□D□.□□□
  A□□□□s□□ro□□□□s D□-AB□0□3□ : ATB□□ro□□□□s□□et.□□□

4.2 Manual

- □o□trol M□□ □ro□ra□ □stor□
- □ara□eter Ma□□al
- □rror □ode Ma□□al
- De□a□lt □o□trol □ara□eter Sett□□ Ta□le
- Flow□□art
- □o□ □ □□□□at□o□ □roto□ol
- O□erat□o□ Mode□□er□or□ a□□e□Mode□
- □stall Ma□□al □ □ro□ra□ Dow□load Ma□□al
- I/O Board □al□rat□o□ Met□od Ma□□al □or Te□ □erat□re □ □ress□re se□sors

HMI (Human Machine Interface)

(iXP50-TTA/DC)

Turbo blower series G3 / G4.5 / G5 / G5plus

Stat□s	□re□ared	Re□ewed	A□□ro□ed	□□e□t□□e	□□□l□s□
Date□ □a□ e	□0□□.0□.□□ □ □□□□eol.Lee	□0□□.0□.30 □ □□□□eol.Lee	□0□□.0□.3□ □□□l□□□ □M	□0□□.06.04 Ro□ert A.□a□so□	Tra□slat□o□ o□ t□e or□□□al do□□□ e□t

1. Function description 3

1.1 General 3

1.2 Reference data 3

1.3 □e□eral s□e□□□at□o□s 4

1.4 F□□t□o□ s□e□□□at□o□s 5

1.5 □art □a□es o□□□□t□o□s 6

1.6 □ower inpu t w□r□□□ 8

1.6.1 D□ □ower w□r□□□ 8

1.6.2 □ower ter□ □al a□d w□re s□e□□□at□o□ 8

1.7 D□□ e□s□o□ 9

1.8 Fixation 9

1. Function description

1.1 General

□□□ a□-□a□□□e □ter□a□e □□M□□s a □o□ □o□e□t o□□erta□ de□□es t□at are □a□a□le o□ □a□dl□□ □□□ a□-□a□□□e □tera□t□o□s. T□e □ter□a□e □o□s□sts o□ □ardware a□d so□tware t□at allow □ser □□□□ts to □e tra□slated as s□□□als □or □a□□□es t□at□□□ t□r□□ □ro□de t□e re□□□red res□lt to t□e □ser.

□ro□ert□es

- □ □□□ a□d □□□d d□st□□t□o□ wit□ 6□□□36 □olors.
- □ar□o□s □e□tor s□□ □ols a□d □□□□ □□al□t□ raster s□□ □ols.
- S□□□ort d□□erse □le t□□es □□□l□d□□ BM□□□□□ □□ F□a□d WMF□et□.
- S□□ □le □o□e □□□e□e□ts wit□ □F a□□□at□o□.
- □0/□00 BAS□-T □t□er□et □ter□a□e.
- □o□□e□e□t a□d eas□s□ree□ed□t□□□.
- Stre□□t□e□ed data □a□a□e□e□t □Lo□□□□□□Re□□□e□a□d Alar□ □.
- Read □□□□t□o□ o□a □o□troller□s state □□□or□at□o□ □Mo□tor□□□ a□d □a□□te□a□□e□. M□lt□l□□□□al d□s□la□ □□ to 40 la□□□a□es a□d eas□ swit□□□□□.
- O□l□□e □ro□ra□ s□□ □lat□o□.
- Ta□ □□□□□t□o□ o□t□e □M□S/W □as□to □□a□□e t□e address o□t□e □ra□□□□o□e□ts. □SB □ost □or t□e □se o□□er□□□eral de□□es □Mo□se□□e□oard□□r□ter□et□.□

1.2 Reference data

Ma□□a□t□rer	LS □d□str□al S□ste□s □o.□Ltd.
Des□□at□o□	TFT L□D / □6-□t 6□□□36 □olors S□□A □800□300□□ □ □a□□el□□□□□80□.□a□□0/□00Base-T□□ □□□a□□el□RS-4□□/48□ □ode
Model	□□□□0-TTA/D□
A□R□□□ T□r□o □te□ □o.	04□-030□48
A□R□□□ T□r□o des□□at□o□	□M□/ □□□□0-TTA/D□

1.3 □e□eral s□e□□□□at□o□s

□o	□te□	S□e□□□□at□o□				Sta□dard
1	O□erat□o□ Te□ □.	0℃~+5 0℃				-
2	Stora□e te□ □.	-□0℃~+60℃				-
3	O□erat□□□ □□□ d□t□	1□~85% R□, (□o□-□o□de□s□□□)				-
4	Stora□e □□□ d□t□	1□~85% R□, (□o□-□o□de□s□□□)				-
5	□□rat□o□ Res□sta□□e	For d□s□o□t□□□o□s □□rat□o□			Numb □r	□□□ 6□□3□-2
		Fre□□e□□□	A□□eleratio□	A□ □lt□de	1□ t□□es □or ea□□ X, Y, Z a□s	
		5≤f< 9 Hz	-	3.5mm		
		9≤f≤150 Hz	9.8 ㎨(□G)	-		
		For □o□t□□□o□s □□rat□o□				
		Fre□□e□□□	A□□eleratio□	A□ □lt□de		
		5≤f< 9 Hz	-	1,75mm		
		9≤f≤150 Hz	4.9 ㎨□0.□G□	-		
6	Shock □□d□ra□□e	*Ma□. imp□ac□: a□□eleratio□: □47 ㎨(15G) *D□rat□o□ t□□e: 11 ㎳ * □□lse wa□e: □al□s□□e □□lse (3 t□□es ea□□ in X, Y a□d Z dire□t□o□s)				IEC 61131-2
7	□o□se	S□□are wa□e □□ □□lse □o□se	A□: ±1□5□0V D□: ±1□000V			LS□S Sta□dard
		□le□trostat□□ d□s□□ar□e Immun□ty	±6 kV □D□s□□ar□e by □o□ta□t) □8kV □Air d□s□□ar□e)			IEC 61131-2 □□□ 6□000-4-2
		Rad□ated ele□tro□a□□et□□ □eld □o□se	80 ~ 1 □000 MHz, 1 □ V/m			□□□ 6□□3□-2 IEC 61□00-4-3
		Fast tra□s□e□t & B□rst □o□se	□ate□or□	□ower □od□le	□o□ □ □□□□at□o□ □ter□a□e	IEC 61131-2 IEC 61□00-4-4
			□olta□e	2 kV	1 kV	
8	□□□ro□□e□t	Free □ro□ □orros□□e □ases a□d e□□ess□□e d□st				-
9	O□erat□□□ h□ight	Up to 2□000m □6,56□ □t)				-
1□	□oll□t□o□ de□ree	2 or less				-
11	□ool□□□ □et□od	Sel□-□ool□□□				-

1.4 F□□□t□□ s□e□□□□at□□s

T□□e	□□□□0-TTA/D□	
D□s□la□ t□□e	TFT L□D	
S□ree□ s□□e	8.4”(21cm)	
D□s□la□ resol□t□o□	800 □600 □□el□S□□A□	
D□s□la□ □olor	□6-□t a□d □4-□t □olor □de□a□lt: □6-□t □olor□	
□□d□□at□o□ de□ree	Le□t/R□□□t: 80 de□. □□□er: 80 de□. Lower: 60 de□.	
Ba□□l□□□t	L□D T□□e	
Ba□□l□□□t l□□e	□0□000 □o□r	
Br□□□t□ess	□00□d/m²	
To□□□ □a□el	4- L□□e t□□e□a□alo□	
So□□d O□t□□t	Ma□□et□□ □□□□er □Ma□8□dB□	
A□d□o O□t□□t	□ □□a□□el□stereo a□d□o o□t□□t	
□ro□ess	ARM □orte□-A8 □ore □3□□□t R□S□ □□□□□ □□	
Me□or□	Flas□	□□□MB d□s□la□ □□8MB□
	O□erat□□□ RAM	□□6MB
	Ba□□□□ RAM	□MB
Ba□□□□ t□□e	Date/□o□r data a□d Lo□□□□□/Alar□/Re□□□e data	
Batter□ d□rat□o□	A□□ro□. 3 □ears □O□erat□□□ a□ □□e□t te□ □erat□re o□□□℃□	
□t□er□et	□ □□a□□el□□□□□80□. □a□□0Base-T/□00Base-T□	
□SB □ost	3 □□a□□els□□SB □.0 □ost □□ o□se□□e□□oard□□r□□ter a□d □SB □e□ or□dr□□er □s a□a□la□le□ □ □□a□□el□□SB □.0 sla□e □□or dow□load a□d □□load □ro□e□t □□le□	
RS-□3□□	□ □□a□□el	
RS-4□□/48□	□□□a□□el□RS-4□□/48□ □ ode	
SD □ard	□ Slot □SD□□□	
□□te□s□o□ □ od□le	For □o□ □ □□□□at□o□ a□d □/O o□t□o□ □ od□le □a□a□la□le later□	
M□lt□□□□□al la□□□a□e	□□ to 40 la□□□a□e s□□ □lta□eo□sl□	
A□□□ at□o□	□ F□or□at □s a□a□la□le.	
Re□□□e	a□a□la□le	
Data lo□□□□□	a□a□la□le	
S□r□□t e□e□□tor	a□a□la□le	
Sta□dard □ert□□□at□o□	□□□□L□□□	
De□ree o□□rote□t□o□	□□6□	
D□□ e□s□o□ □□ □ □	□40 □ □80 □ □4.4	
□a□el □□t □□ □ □	□□8.□ □ □□8.□	
Rated □olta□e□□□	D□ □□.□□□8.8□	
□ower □o□s□□ □t□o□ □W□	36	
We□□□t □□□□	□.□	

1.5 □art □a□es o□□□□□t□o□s

□art □a□es o□□□□□t□o□s are as des□r□□ed □elow.

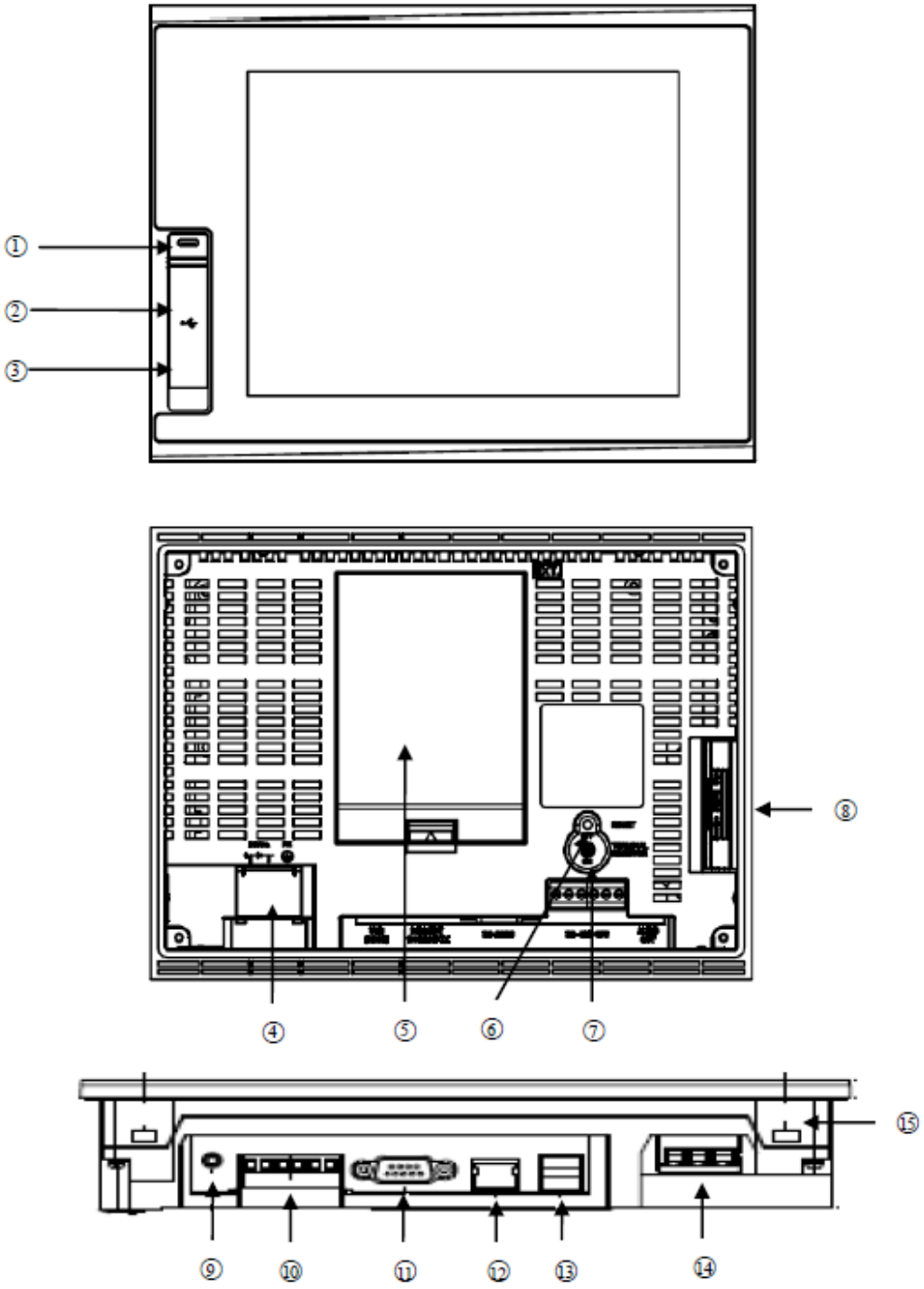

□F□□. □ □art □a□es o□□□□□t□o□s □□□□0-TTA□□

□o.	□a□e	Des□r□t□o□
①	□ower stat□s L□D	□d□at□□ t□e state o□de□□e □O□: Bl□e□
②	□SB De□□e	□□Lo□□□□/Re□□e/S□ree□ Data Ba□□□□ □□Se□d □ro□e□t data a□d □□-R□□t□□e 3□Re□e□e □a□□ data a□d □ro□e□t □le
③	□SB □ter□a□e	□o□ □osed o□t□ree □orts □Fro□t s□de □ □ort□Lower e□d □ □orts□ □□ □SB Me□or□ □o□□e□t□o□: Ba□□□□ o□ data s□□□ as alar□ /lo□□□□/re□□e a□d stora□e o□s□ree□ data □□□SB Me□ or□ □o□□e□t□o□: Se□d/Re□e□e □ro□e□t data□Se□d □□-R□□t□□e 3) User's Interface Connection: Using mouse/keyboard 4□□r□ter □o□□e□t□o□: □r□t□□ □□□□t□o□
④	□ower Ter□ □al □o□er	□re□e□t□o□ □ro□ ele□tr□□s□o□□
⑤	□□te□ded □ter□a□e	□o□ □ □□□□at□o□□□/O O□t□o□ Mod□le 3 □□□ts Mo□□ted → O□t□o□al □oard to □e de□elo□ed later
⑥	Reset Swi□□	□ardware Reset Swi□□
⑦	RS-4□□/48□ Ter□ □at□□□ Res□sta□□e Swi□□	RS-4□□/48□ Ter□ □at□□□ Res□sta□□e O□/O□□
⑧	SD □ard □ter□a□e	□□Ba□□□□ o□data s□□□ as alar□ /lo□□□□/re□□e a□d stora□e o□ s□ree□ data □□Se□d/Re□e□e □ro□e□t data□Se□d □□-R□□t□□e 3□W□dow □□ OS □□date F□□□t□o□ □□a□ □e □sed wi□□ D□□ S/W set□
⑨	A□d□o O□t□□t	□ □□a□□el A□d□o O□t□□t
⑩	RS-4□□/48□ □o□□e□tor	RS-4□□/48□: □L□ or □o□trol De□□e □o□ □ □□□□at□o□
⑪	RS-□3□□ □o□□e□tor	RS-□3□□: □L□ or □o□trol De□□e □o□ □ □□□□at□o□
⑫	□t□er□et Ter□ □al	□t□er□et: □0Base-T / □00Base-T□ □□Se□d □ro□e□t Data □□Re□e□e □a□□□□ data a□d □ro□e□t □le 3□Se□d □□-R□□t□□e 4□□L□/□o□trol De□□e □o□ □ □□□□at□o□
⑬	□ower Ter□ □al	□o□ □osed o□□ower □□□□t a□d F□ Ter□ □al
⑭	□a□el Mo□□t□□□ □art	F□□□□□ □□T □a□el o□t□e □a□el □s□□□ □ra□□et

1.6 □ower □□□□t w□□□□

□.6.□ D□ □ower w□□□□

□□□0-TTA/D□ □s □o□□e□t□□□ to D□□4□.

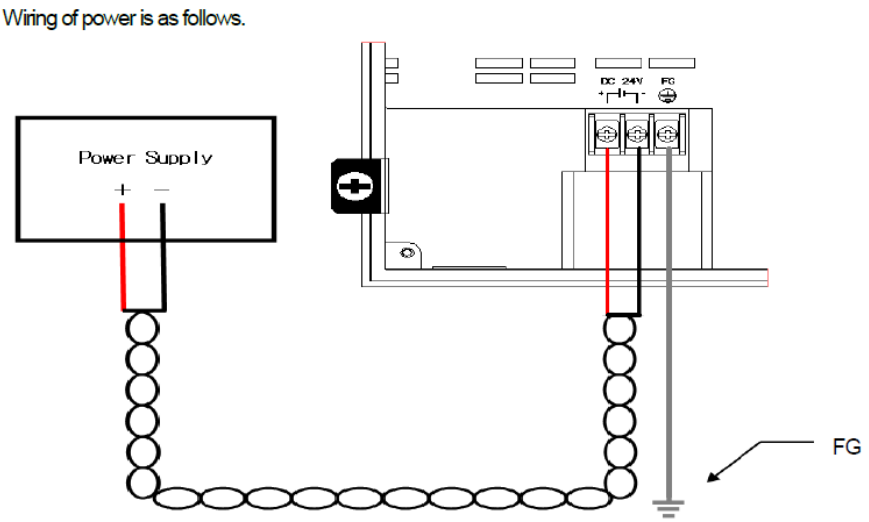

□F□□.□ □ower □□□□t w□□□□□

□.6.□ □ower ter□ □al a□d w□re s□e□□□□at□o□

W□re s□e□□□□at□o□	□.□□AW□ □6□□ □.□□AW□ □□□□
□ower ter□ □al	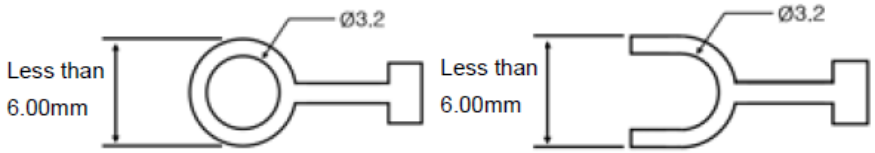
Re□ar□	□□□W□e□t□e re□□lat□o□ o□□ower □s □□□□er t□a□ r□o□s□o□□□se t□e □o□sta□t □olta□e tra□s□or□er. □□□□□ □ase □ower □as □ □□□□ □o□se□□se t□e □s□lat□o□ tra□s□or□er. (3) Separate the XGT Panel's power from the main circuit (high voltage, lar□e □□rre□t□□a□le□/O s□□□al □a□le. □□oss□□le□□□stall at a □ter□al o□□ ore t□a□ □00□ □.

1.7 D□□e□s□o□

□□□0-TTA d□□e□s□o□ □□ □ □

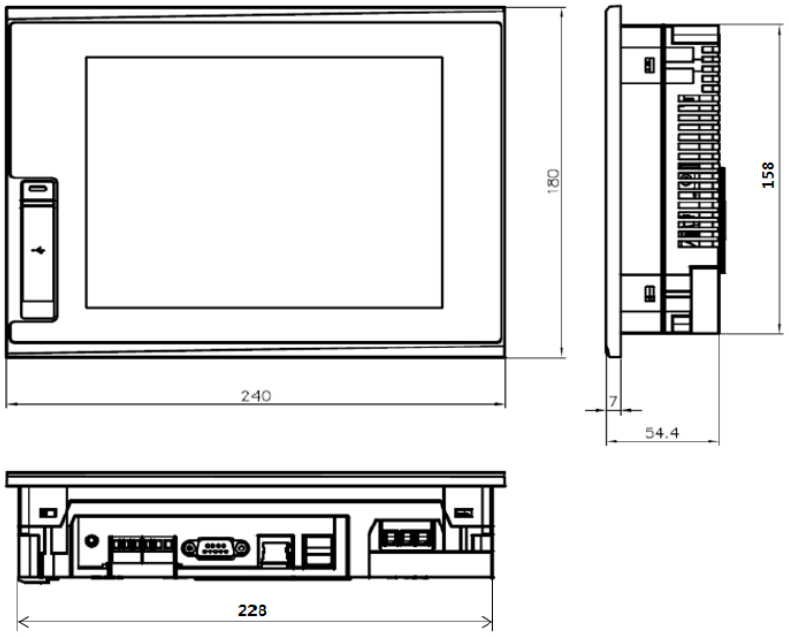

□F□.3 D□□e□s□o□ □□□□0-TTA□□

1.8 Fixation

F□□ □□T □a□el to t□e □a□el □s□□□ t□e s□□□l□ed □ra□□ets □ro□ded □□ t□e O□M □a□□a□□□□.

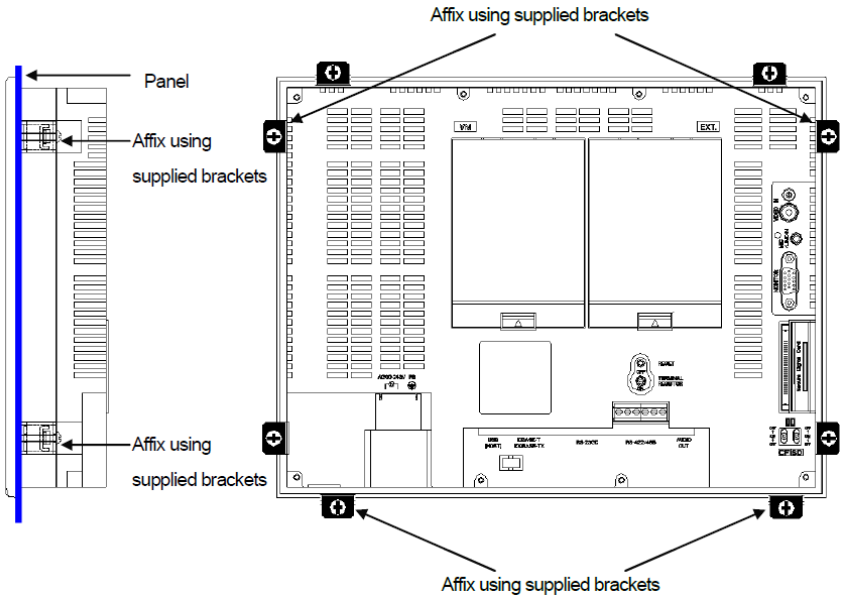

□F□.4 F□□at□o□ □□□□0-TTA□□

□.8.□ Mo□□t□□□ □□T □a□el

① □□sert t□e □o□□t□□□ □ra□□ets □□to t□e □□□ □□sert□o□ slots. T□□□te□□□□ t□e s□rews w□t□ too □ □□□□ □or□e □a□ da□a□e t□e □rod□□t. □T□e re□o□ □e□d tor□□e □s 0.6□□.□ □

② □se s□rewdr□□er to t□□□te□ □ra□□ets s□rew as □ll□strat□o□ s□ow□.

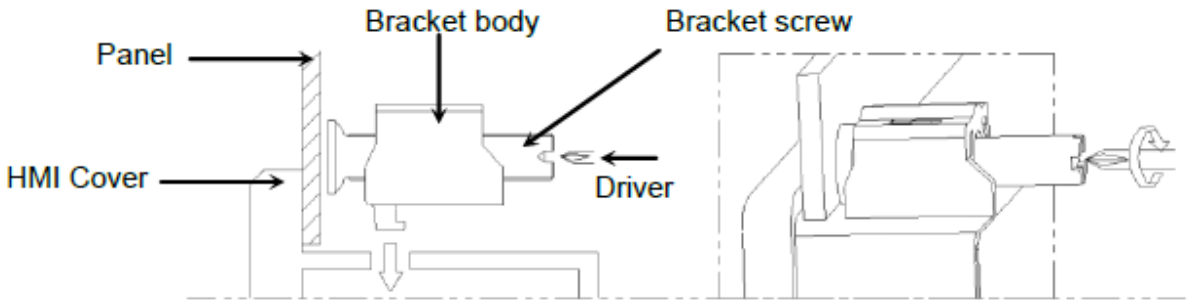

□F□□.□ F□□at□o□ □□□□□0-TTA□□

Remark
□lease re□o□e a □rote□t□e □□ atta□□ed to t□e s□ree□ w□e□ la□□□□□□□ a □rod□□t. Mod□□□at□o□ o□t□e □rote□t□e □le □a□ □a□se t□e to□□□ □al□□□□t□o□ or error □□ □□□□t.

□. □o□ □ □□□□at□o□ □o□□e□tor □o□□□□rat□o□

2.1 RS4□□/48□ □ RS-□3□□

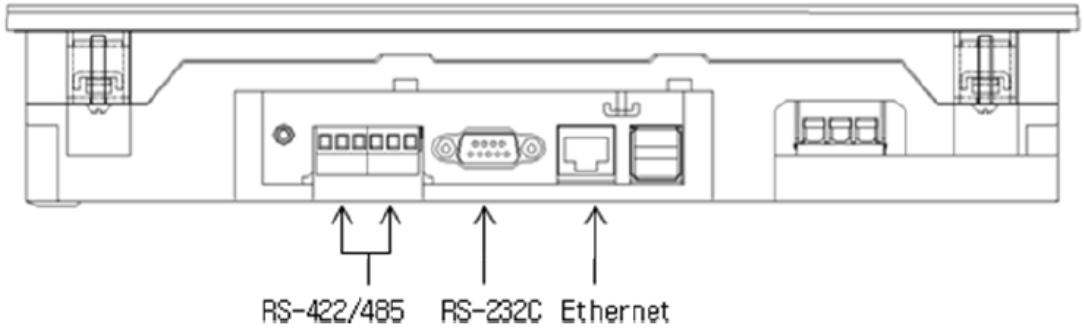

□F□□.6 □o□ □ □□□□at□o□ □ort □□□□□0-TTA□□

□.□.□ D-S□□ □□□Male □o□□e□tor □or RS-□3□□

<iXP models>

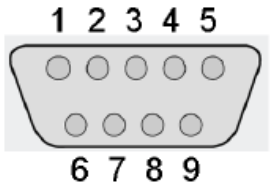

Pin No.	Name	Function
1	DCD	Data Carrier Detect
2	RD	Receive data
3	SD	Send data
4	DTR	Data Terminal Ready
5	SG	Signal Ground
6	DSR	Data Set Ready
7	RTS	Request To Send
8	CTS	Clear To Send
9	5V	5V, 250mA voltage output

□F□□.□ RS-□3□□ □□□□□0-TTA□□

□.□.□ 6□□Ter□ □al □lo□□ □or RS-4□□/48□

<iXP models>

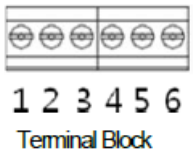

Pin No.	Name	Function
1	TX+	Send Data +
2	TX-	Send Data -
3	RX+	Receive Data +
4	RX-	Receive Data +
5	SG	Signal Ground
6	FG	FG

□F□□.8 RS-4□□/48□ □□□□□0-TTA□□

□.□.3 R□4□□□t□er□et

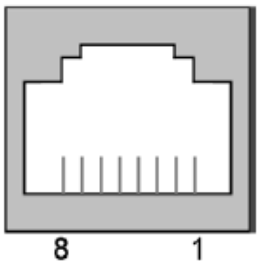

Pin No.	Name	Function
1	TX+	Transmit+
2	TX-	Transmit-
3	RX+	Receive+
4	N.C	No connection
5	N.C	No connection
6	RX-	Receive-
7	N.C	No connection
8	N.C	No connection

□F□□.□ R□4□□□t□er□et □□□□□0-TTA□□

- □□d-

Type 2 AC Surge Protectors
DS40 Series

Imax 40 kA

DS41S-230

- **Type 2 AC Power Surge Protector**
- **Slim 18 mm Form Factor**
- **Fault Indicator Window**
- **Remote Signal Contacts**
- **Imax : 40 kA at 8/20 µs**
- **In : 20 kA at 8/20 µs**
- **UL 1449 3rd Edition Recognized**

Dimensions and Electrical Diagram

(in mm)

DS41S (1 pole)

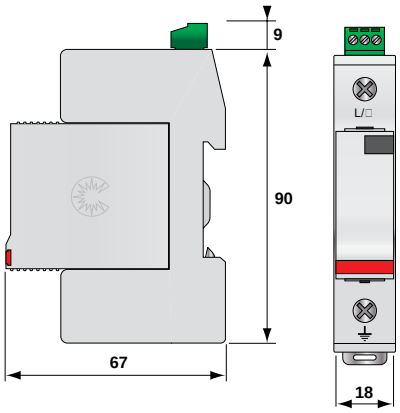

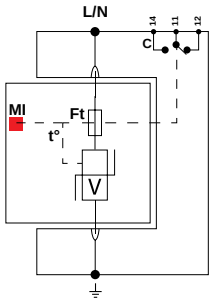

V : High energy varistor
t° : Thermal disconnection system
Ft : Thermal fuse
MI : Disconnection indicator
C : Remote signaling contact

Characteristics

CITEL Part Number		DS41S-480	DS41S-400	DS41S-320	DS41S-230	DS41S-120
AC network voltage		480 V	277-347 V	220-277 V	220-240 V	120-127 V
Maximum operating voltage	Mcov	550 Vac	420 Vac	320 Vac	275 Vac	150 Vac
Temporary overvoltage withstand	U_T	770 Vac	440 Vac	440 Vac	440 Vac	230 Vac
Operating current	Ic	< 1 mA	< 1 mA	< 1 mA	< 1 mA	< 1 mA
Follow current	If	none	none	none	none	none
Nominal discharge current 15 x 8/20 µs impulse	In	20 kA	20 kA	20 kA	20 kA	20 kA
Maximum discharge current 8/20 µs withstand	Imax	40 kA	40 kA	40 kA	40 kA	40 kA
Protection level at In	Up-In	2.0 kV	1.8 kV	1.5 kV	1.25 kV	0.9 kV
Protection level at 10 kA		1.8 kV	1.5 kV	1.3 kV	1.1 kV	0.7 kV
Voltage protection rating	Vpr	1,800 V	1,500 V	1,200 V	1,000 V	700 V
Short-circuit current Rating	Sccr	100 kA	100 kA	100 kA	100 kA	100 kA
Associated Disconnection Devices						
Thermal disconnector		Internal				
Fuses		Fuses type gG - 50 A max. (see Note 1)				
Installation ground fault breaker		Type «S» or delayed				
Mechanical Characteristics						
Dimensions		See diagram				
Connection		By screw terminals : 4-25 mm² / by bus				
Disconnection indicator		1 mechanical indicator				
Remote signaling of disconnection		Option DS40S - output on changeover contact				
Mounting		Symmetrical rail 35 mm				
Operating temperature		-40/+85 °C				
Protection class		IP20				
Housing material		Thermoplastic UL94-V0				
Standards Compliance						
EN 61643-11: Europe		Low Voltage SPD - Class II Test				
IEC 61643-11: International		Low Voltage SPD - Class II Test				
NF EN 61643-11: France		Parafoudre Basse Tension - Essais Classe II				
UL1449 3rd Edition: USA		Type 4, for use in Type 2 applications				
Part Number						
DS41S-480		331011				
DS41S-400		3314111				
DS41S-320		331911				
DS41S-230		331705				
DS41S-120		331611				

Note 1: Rating in compliance with NF C15-100 art.534.1.5.3. In order to increase service continuity, higher rating can be used (up to 125 A). For further information, please consult product instructions..

CITEL

Type 2 Multi-Pole AC Surge Protectors
DS42, DS43, DS44

DS44-230/G

DS4x S-xxx/G

- « » = CT1 Configuration (common mode)
- «G» = CT2 (common and differential mode)
- Operating voltage (120, 230, 320, 400, 480)
- «S» = Remote signal option
- Number of protected poles (2, 3, 4)

Dimensions and Electrical Diagrams

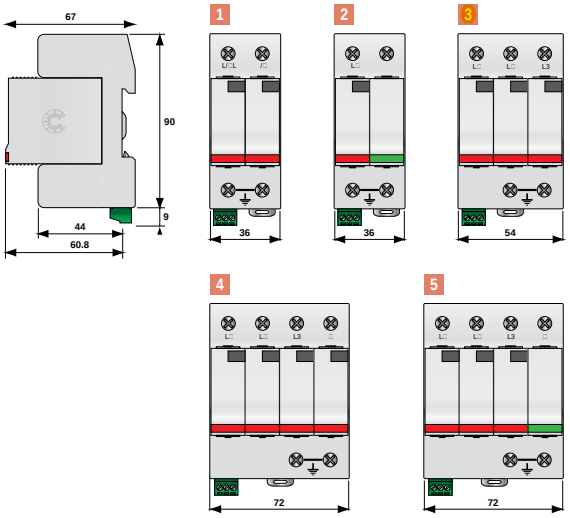

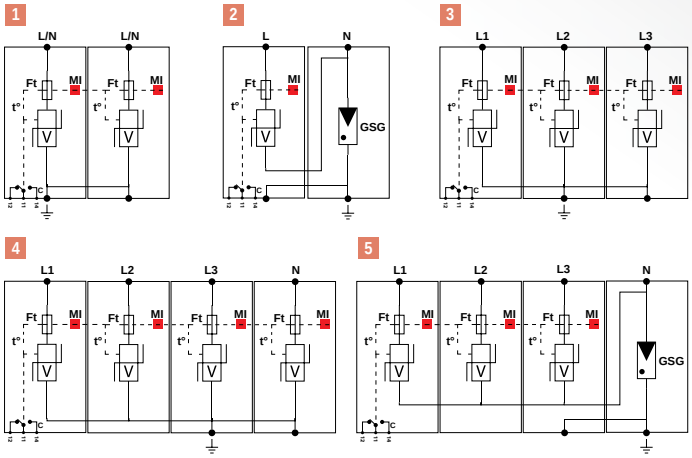

Reference	Part Number	Network	AC System	Protection Mode		Imax Total	Up L/PE	Up L/N	Diagram
				Common	Differential				
DS44S-230/G	461532	230/400 V 3-phase+N	Wye	●	●	40 kA	1.5 kV	1.25 kV	5
DS44S-120/G	461632	120/208 V 3-phase+N	Wye	●	●	40 kA	1.5 kV	0.9 kV	
DS44S-400	461422	277/480 V 3-phase+N	Wye	●		160 kA	1.8 kV	-	4
DS44S-230	461522	230/400 V 3-phase+N	Wye	●		160 kA	1.25 kV	-	
DS44S-120	461622	120/208 V 3-phase+N	Wye	●		160 kA	0.9 kV	-	
DS43S-480	461017	480 V 3-phase	Delta	●		120 kA	2.0 kV	-	3
DS43S-230	461523	240 V 3-phase	Delta	●		120 kA	1.25 kV	-	
DS43S-120	461623	120/240 V 2-phase+N	Split phase	●		120 kA	0.9 kV	-	
DS42S-230/G	461531	230 V 1-phase+N	Single phase	●	●	40 kA	1.5 kV	1.25 kV	2
DS42S-120/G	461631	120 V 1-phase+N	Single phase	●	●	40 kA	1.5 kV	0.9 kV	
DS42S-400	461421	277 V 1-phase+N, 2-phase	Single/Split phase	●		80 kA	1.8 kV	-	1
DS42S-230	461521	230 V 1-phase+N, 2-phase	Single/Split phase	●		80 kA	1.25 kV	-	
DS42S-120	461621	120 V 1-phase+N, 2=phase	Single/Split phase	●		80 kA	0.9 kV	-	

*) DSx-280x or DS4x-320x (e.g: DS44-320/G) for areas with possible temporary voltages (bad quality AC voltage or supply by AC generator set).

Pressure Sensor

(Gage, Absolute, Differential Type)

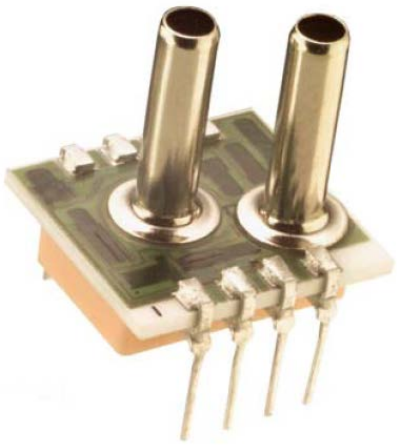

Stat□s	□re□ared	Re□ewed	A□□ro□ed	□□e□t□e	□□□l□s□
Date□□a□e	□0□6.□□.06	□0□□.0□.06 □ae□o Lee□□□	□0□□.0□.06 □o□□□□eo□.Seo		Tra□slat□o□ o□t□e or□□□al do□□□ e□t

□o□te□ts

□. F□□□t□o□ des□r□□t□o□

□.□ □e□eral

□.□ □te□ Data

□.3 □□stallat□o□

□. S□e□□□□at□o□

□.□ □er□or□ a□□e S□e□□□□at□o□s

□.□ D□□e□s□o□s

□.3 □o□□e□t□o□s

Pressure Sensor
(Gage, Absolute, Differential type)

AERZEN

A□R□□□ T□RBO

1. Function description

□.□ □e□eral

- A □ress□re se□sor □or t□e □eas□re□ e□t o□T□r□o Blower.
- ATM□□O□□□0□4 Board Mo□□ta□le □ress□re Se□sor.
- 0□□00□ □ O□t□□t
- □se t□e D□□ere□t□al T□□e a□d □a□e T□□e.
- Te□ □erat□re □o□ □e□sated.
- Meas□r□□□ t□e D□□ere□t□al □ress□re□D□s□□ar□e □ress□re a□d F□lter D□□ere□t□al □ress□re□to □e a□le to □al□□late t□e □ow rate

□.□ □te□ data

□te□ □o.	Des□r□□t□o□	Des□r□□t□o□ □	De□□□e □a□ e at Board	Ra□□e	Ma□□a□t□rer	Re□ ar□s
04□-0300□3	□ress□re Se□sor	□ress□re□□□□0A-00□D-3L	SS3	0-□□s□	Meas□re□ e□t S□e□alt□es	□d□F□lter D□□ere□t□al□ D□□ere□t□al t□□e
04□-0300□4	□ress□re Se□sor	□ress□re□□□□0A-00□D-3L	SS□	0-□□s□	Meas□re□ e□t S□e□alt□es	D□3□D□□ere□t□al □ress□re□ D□□ere□t□al T□□e
04□-0300□□	□ress□re Se□sor	□ress□re□□□□0A-030□-3L	SS□	0-30□s□	Meas□re□ e□t S□e□alt□es	O□□□D□s□□ar□e □ress□re□ □a□e

□.3 □□stallat□o□

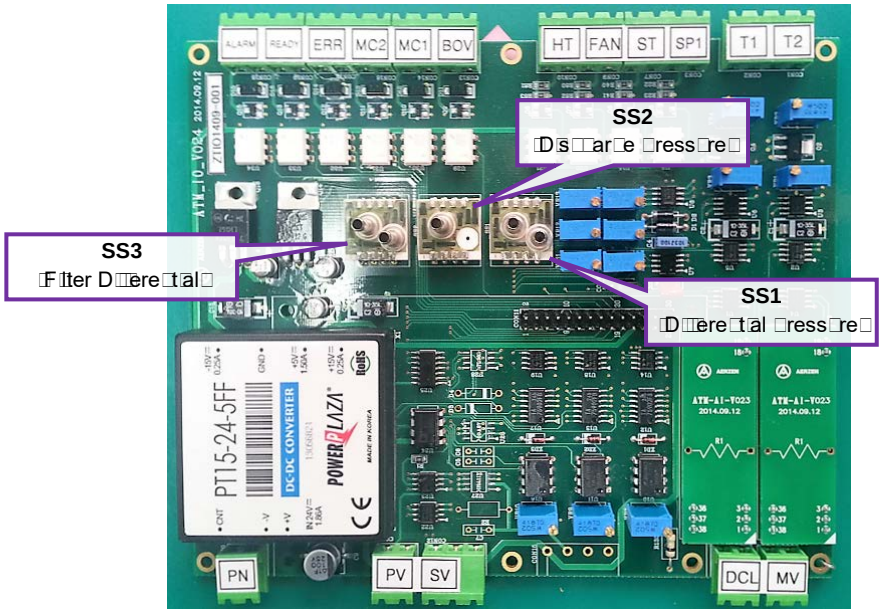

2. Specification

□.□ □er□or□a□□e S□e□□□□at□o□s

S□□□l□ □□rre□t: □.□□ A

A□ □e□t Te□ □erat□re: □□℃ □□□less ot□erw□se d□e□□□ed□

□ARAM□T□RS	M□□	T□□	MA□	□□TS	□OT□S
S□a□	□□	□00	□□0	□ □	□
S□a□□□ □s□□ers□o□□	30		60	□ □	□
□ero □ress□re O□t□□t	-□		□	□ □	
□ress□re □o□ L□ear□t□	-0.□	□0.0□	0.□	□ S□a□	□
□ress□re □□steres□s	-0.0□	□0.0□	0.0□	□ S□a□	
□□□□t □ O□t□□t Res□sta□□e	□□00	4400	6000	Ω	
Te□ □erat□re □rror □ S□a□	-0.□	□0.3	0.□	□ S□a□	3
Te□ □erat□re □rror □ □ero	-0.□	□0.□	0.□	□ S□a□	3
T□er□al □□steres□s □ □ero		□0.□		□ S□a□	3
S□□□l□ □□rre□t		□.□	□.0	□A	
Res□o□se T□□e □□0□ to □0□ □		□.0		□S	4
O□t□□□t □o□se □□0□□to □□□□ □□		□.0		□□ □-□	
Lo□□ Ter□ Sta□□t□ □O□set □ S□a□□		□0.□		□ S□a□	□
□ress□re O□erload			3□	Rated	6
□o□ □e□sated Te□ □erat□re			□0	℃	
O□erat□□□ Te□ □erat□re			□□□□	℃	
Stora□e Te□ □erat□re			□□□0	℃	
We□□t			3	□ra□s	
Solder Te□ □erat□re	□□0□□ Ma□ □ Se□				
Med□a	□o□-□orros□e Dr□ □ases □o□ □at□□le wt□ S□□o□□□re□□ RT□□□old□□era□ □□□□□□el□a□d Al□□ □□□□				

□otes

□. Rat□o□ etr□□ to s□□□l□ □□rre□t.

□. Best □t stra□□t l□e.

3. Ma□□ □□ te□ □erat□re error □etwee□ 0□□ a□d □0□□ wt□ res□e□t to □□□□. For □□s□de□□es□ Te□ □erat□re □rror -- □ero □s □□□.

4. For a □ero-to-□ll s□ale □ress□re ste□ □□a□□e.

□. Lo□□ ter□ sta□□t□ o□er a o□e □ear □er□od wt□ □o□sta□t □□rre□t a□d te□ □erat□re.

6. □□ □a□□ □□ □or □00□s□de□□e. □0□s□□ a□□ □□ □or □a□d □□s□de□□es.

□.□ D□□e□s□o□s

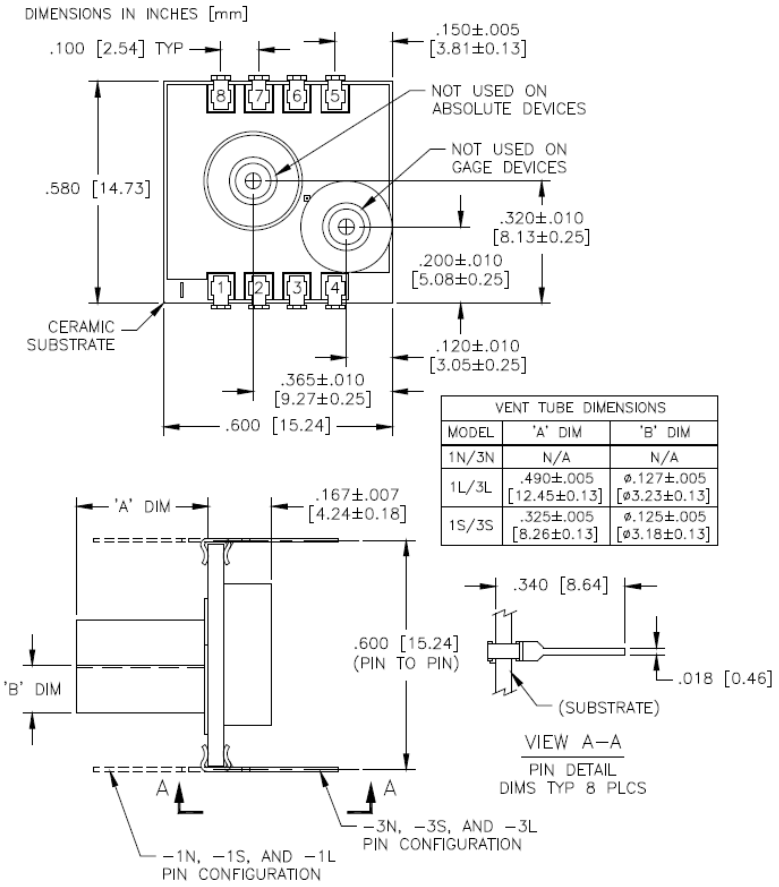

VENT TUBE DIMENSIONS		
MODEL	'A' DIM	'B' DIM
1N/3N	N/A	N/A
1L/3L	.490±.005 [12.45±0.13]	ø.127±.005 [ø3.23±0.13]
1S/3S	.325±.005 [8.26±0.13]	ø.125±.005 [ø3.18±0.13]

□.3 □o□□e□t□o□s

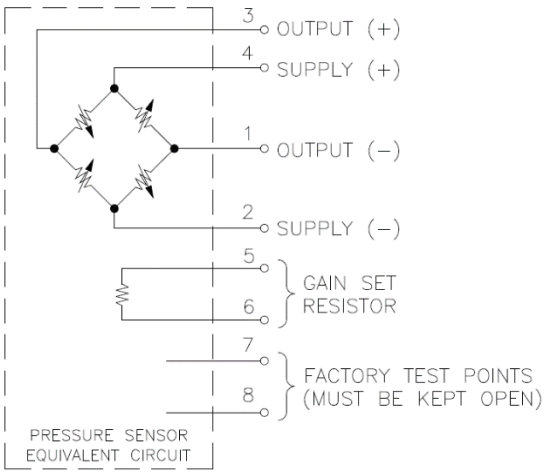

Temperature Sensor

(Thermocouple K-type)

□o□te□ts

□. F□□□tio□ des□r□□tio□

□.□ □e□eral

□.□ □te□ Data

□.3 □□stallatio□

□. S□e□□□□atio□

□.□ Se□sor T□□e

□.□ □rote□tio□ T□□e T□□e

□.3 □o□ □e□sat□□□ w□re s□e□□□□atio□

3. Re□ere□□e data

3.□ T□er□al ele□tro□ ot□□e □or□e ta□le

3.□ □rote□tio□ T□□e

1. Function description

1.1 General

- T□ese t□er□o□□les are □o□□e□e□t □or □eas□r□□ a w□de ra□□e o□te□ □erat□re □□ □e□eral □la□ts□a□d are a□a□la□le □□ □-t□□e.
- T□e□are □s□lated w□t□ a □or□ela□ t□□e□a□d t□e□ □o□sed □□ a □etal □rote□t□□□ t□□e □or □eat-□□ress□re-a□d □orros□o□-□roo□□□.

1.2 □te□ data

□te□ □o.	Des□r□□t□o□	Des□r□□t□o□ □	Ma□□□a□t□rer	Re□ar□s
04□-03003□	Se□sor	Te□ □erat□re□T□er□o-□o□□le□□-T□□e□ 3□ □a□le	□a□□oo□ □le□tr□□ □eater	
04□-030066	Se□sor	Te□ □erat□re□T□er□o-□o□□le□□-T□□e□ □□ □a□le	□a□□oo□ □le□tr□□ □eater	

1.3 □□stallat□o□

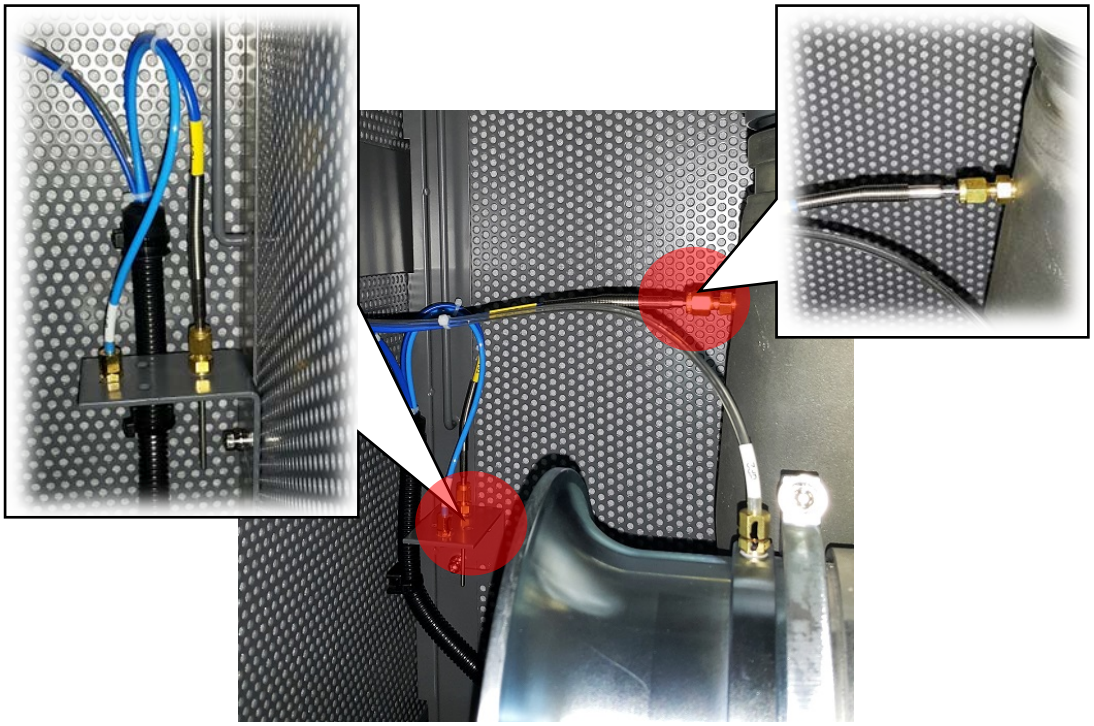

2. Specification

- Se□sor t□□e : T□er□ o-□o□□le □-t□□e□□A□
- □rote□t□o□ T□□e Mater□al : S□S3□6
- Meas□re□ e□t Te□ □erat□re Ra□□e : -□00 ℃ □ 8□0 ℃
  □□rote□t□o□ T□□e□
- □o□ □e□sat□□□ w□re : □□□ □□-□ 0.□S□
- □rote□t□o□ T□□e T□□e : □□□ro□□d Ro□□d T□□ T□□e
- □rade : 0.□

2.1 Se□sor T□□e : □□ro□ e□□o□sta□ta□

S□□ □ol	S□□ □ol □Old□	Mater□als	
		□□□o□ □ □ss□re	□-□□o□ □ □ss□re
B	-	□lat□□□□ □30□ R□od□□□	□lat□□□□ □6□ R□od□□□
R	-	□lat□□□□ □□3□ R□od□□□	□lat□□□□
S	-	□lat□□□□ □□0□ R□od□□□	□lat□□□□
□	□A	□□ro□ e	□o□sta□ta□
□	□R□	□□ro□ e	□o□sta□ta□
□	□□	□ro□	□o□sta□ta□
T	□□	□o□□er	□o□sta□ta□

2.2 □rote□t□o□ T□□e T□□e : S□S3□6□□ □□ro□□ded T□□e

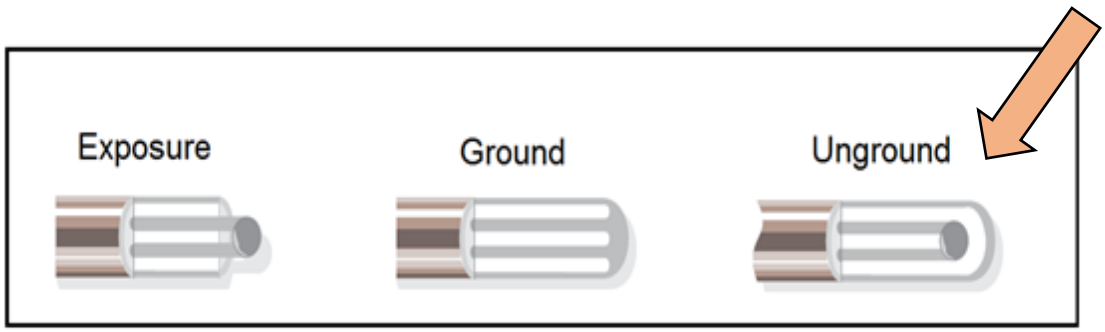

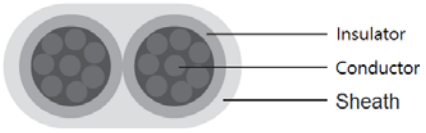

2.3 □o□ □e□sat□□□ wire s□e□□□□at□o□

- A□□l□a□le sta□dards : □S C 1 60 9
- Mater□als a□d str□□t□res
  - □o□d□□tor : □□ro□e, □o□sta□ta□
  - □□s□lator : PVC
  - S□eat□ : □VC
  - □o□d□□tor □ross-se□t□o□ (mm2) : 0.5
  - Stra□d/D□a□eter : 7/0.3
  - □o□d□□tor D□a□eter (mm) : 0.9
  - □□s□lat□o□ t□□□□□ess (□ □) : 0.3 5
  - S□eat□ t□□□□□ess □□ □) : 0.7
  - □o□ □lete □rod□□t s□□e (mm) : 3.0 *4.6
  - We□□□t (kg/300m) : 7

- □ro□ert□es o□t□e □oated

□oat□□□ □ater□als	Ma□ Te□ □erat□r e □C□	M□□ Te□ □erat□r e (°C)	Wear res□sta□□ e	□eat res□sta□□ e	Water res□sta□□ e	□□e□ □al res□sta□□ e	O□ res□sta□□ e
□lass □o□er	300	-2□	△	◎	X	O	△
As□estos	□00	-2□	△	◎	X	O	△
Te□lo□	□60	-1□0	◎	O	◎	◎	◎
□.□.□	80	-2□	O	X	◎	△	△
S□□□o□	□00	-60	O	O	O	O	X

◎ e□□elle□t O □est △ □OOD X NG

3. Reference data

3.1 T□er□al ele□tro□ ot□□e □or□e ta□le
A□S□M□ □6.□ □□8□
□S □ □60□ □004 □□t: □ □

℃	□ □	℃	□ □	℃	□ □	℃	□ □	℃	□ □
-0	0.000	0	0.000	400	□6.3□□	800	33.□□□	□□00	48.8□8
-□0	-0.3□□	□0	0.3□□	4□0	□6.8□8	8□0	33.686	□□□0	4□.□□□
-□0	-0.□□□	□0	0.□□8	4□0	□□.□4□	8□0	34.0□□	□□□0	4□.□□□
-30	-□.□□6	30	□.□03	430	□□.664	830	34.□0□	□□30	4□.□□6
-40	-□.□□□	40	□.6□□	440	□8.088	840	34.□0□	□□40	□0.□□6
-□0	-□.88□	□0	□.0□□	4□0	□8.□□3	8□0	3□.3□4	□□□0	□0.633
-60	-□.□43	60	□.436	460	□8.□38	860	3□.□□8	□□60	□0.□□0
-□0	-□.□86	□0	□.8□0	4□0	□□.363	8□0	36.□□□	□□□0	□□.344
-80	-□.□□0	80	3.□66	480	□□.□88	880	36.□□4	□□80	□□.6□□
-□0	-3.□4□	□0	3.68□	4□0	□0.□□4	8□0	36.□□□	□□□0	□□.04□
-□00	-3.□□3	□00	4.0□□	□00	□0.640	□00	3□.3□□	□300	□□.3□8
-□□0	-3.8□□	□□0	4.□08	□□0	□□.066	□□0	3□.□□4	□3□0	□□.□4□
-□□0	-4.□38	□□0	4.□□□	□□0	□□.4□3	□□0	38.□□□	□3□0	□3.0□3
-□30	-4.4□0	□30	□.3□□	□30	□□.□□□	□30	38.□□□	□330	□3.43□
-□40	-4.6□□	□40	□.□33	□40	□□.346	□40	38.□□□	□340	□3.□8□
-□□0	-4.□□□	□□0	6.□3□	□□0	□□.□□□	□□0	3□.3□0	□3□0	□4.□□□
-□60	-□.□4□	□60	6.□3□	□60	□3.□□8	□60	3□.□03	□360	□4.466
-□□0	-□.34□	□□0	6.□3□	□□0	□3.6□4	□□0	40.0□6	□3□0	□4.80□
-□80	-□.□□0	□80	□.338	□80	□4.0□0	□80	40.488		
-□□0	-□.□30	□□0	□.□3□	□□0	□4.4□6	□□0	40.8□□		
-□00	-□.8□□	□00	8.□3□	600	□4.□0□	□000	4□.□6□		
		□□0	8.□3□	6□0	□□.3□□	□0□0	4□.6□□		
		□□0	8.□38	6□0	□□.□□□	□0□0	4□.04□		
		□30	□.34□	630	□6.□□6	□030	4□.43□		
		□40	□.□4□	640	□6.□□□	□040	4□.8□□		
		□□0	□0.□□□	6□0	□□.0□□	□0□0	43.□0□		
		□60	□0.□60	660	□□.44□	□060	43.□8□		
		□□0	□0.□6□	6□0	□□.86□	□0□0	43.□68		
		□80	□□.38□	680	□8.□88	□080	44.34□		
		□□0	□□.□□3	6□0	□8.□0□	□0□0	44.□□□		
		300	□□.□0□	□00	□□.□□8	□□00	□4.□08		
		3□0	□□.6□3	□□0	□□.□4□	□□□0	4□.486		
		3□0	□3.03□	□□0	□□.□6□	□□□0	4□.863		
		330	□3.4□6	□30	30.383	□□30	46.□38		
		340	□3.8□4	□40	30.□□□	□□40	46.6□□		
		3□0	□4.□□□	□□0	3□.□□4	□□□0	46.□8□		
		360	□4.□□□	□60	3□.6□□	□□60	4□.3□6		
		3□0	□□.□3□	□□0	3□.04□	□□□0	4□.□□6		
		380	□□.□□□	□80	3□.4□□	□□80	48.0□□		
		3□0	□□.□□4	□□0	3□.866	□□□0	48.46□		
		400	□6.3□□	800	33.□□□	□□00	48.8□8		

3.2 □rote□t□o□ T□□e

3.2.1 T□□e

T□□e	□□□os□re	□ro□□d	□□□ro□□ded
Im age			
Str□□t□re	□□□osed	□ro□□d t□□e	□s□lated
Res□o□se rate	Fast	□ood	Slow
□er□ et□□t□	NG	□ood	□ood
□□ter□al □□□ro□□ e□tal	NG	□ood	□ood

3.2.2 Kin ds

Mater□al	S□□ □ol	O□erat□□□ Te□ □erat□re (˚C)	Ma ximum o□erat□□□ te□ □erat□re (˚C)	Re□ ar□s
Sta□□less	S□S 304	850	900	
	S□S 316	□00	950	
	S□S 316L	□00	1000	
	S□S 310S	1000	1150	
High -ch ro mium	O-4	1000	1200	
□astello□	□as B	1000	1050	
	□as C	1000	1060	
□a□tal AL	□A	1100	1350	
T□ta□□□□	T□	400	500	
□□o□el	INC o	1050	1150	
□ro□	-	□00	800	

Communication Converter

Contents

1. General 2
2. Items 2
3. Features and benefits 3
4. Technical specifications 3
5. External view 4

1. General

Anybus communication converter supports non-networked device connected to any major fieldbus or industrial Ethernet network. Anybus communication converter performs an intelligent conversion between the serial protocol of the automation device and the chosen industrial network. This compact gateway consumes very little space in a switching cabinet and is easily mounted on a standard DIN rail.

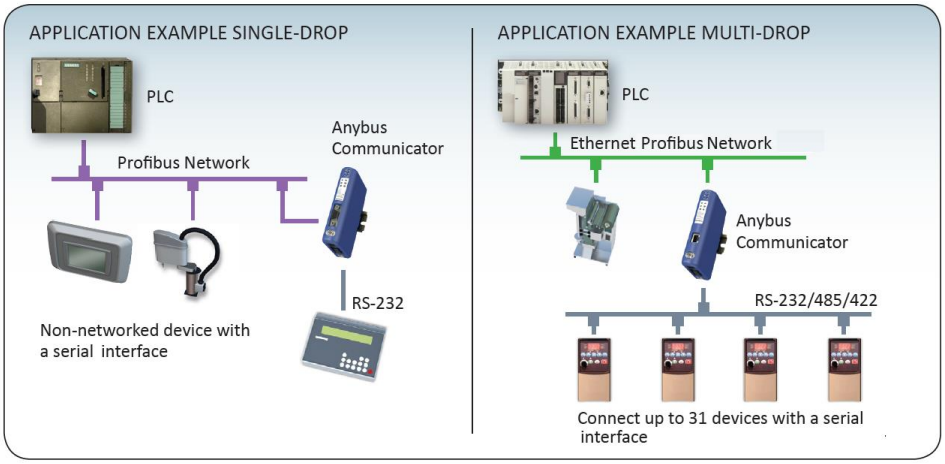

2. Items

Protocol	Subnet	Fieldbus	Communication Converter	Interface Features
Modbus-RTU	RS-232	RS-232	AB7010	‣ Complete Modbus RTU slave functionality ‣ Max 512 bytes of Input and 512 bytes of Output data ‣ Coil and Register access ‣ Configuration via on-board DIP switches ‣ Modbus RTU baudrate 12-57,6 kbit/s ‣ 1x D-sub 9 female network connector
Modbus-TCP/IP	RS-232	LAN	AB7028	‣ Modbus TCP class 0, class 1 and partially class 2 device/slave functionality ‣ Max 512 bytes Input and 512 bytes I/O data ‣ 10/100Mbit operation in full or half-duplex ‣ Dual RJ-45 ports available simultaneously with integrated switch for daisy chaining topology ‣ TCP/IP settings configurable with web-page, Configuration Tool, DHCP or ARP
Ethernet/IP & Modbus TCP	RS-232	LAN	AB7072	‣ EtherNet/IP CONFORMANCE TESTED™ by ODVA ‣ EtherNet/IP Adapter Level 2 and Level 3 I/O Server CIP ‣ Max 509 bytes Input and 505 bytes Output data ‣ 10/100Mbit operation in full or half-duplex ‣ Device Level Ring (DLR) functionality available (announce-based ring participant) ‣ Per-user security framework ‣ Quality of Service (QoS) available ‣ TCP/IP settings can be configurable with web-page, Configuration Tool, DHCP or ARP ‣ Integrated switch allowing for a daisy-chain topology ‣ Dual RJ-45 ports available simultaneously

Profibus-DP	RS-232	RS-232	AB7000	‣ Complete PROFIBUS-DP slave according to IEC 61158 ‣ Max 244 bytes of Input and 244 bytes of Output data - 416 bytes data length in total ‣ Automatic PROFIBUS baud rate detection (9600 bit / s - 12 Mbit / s) ‣ Supports PROFIBUS features: Sync and Freeze and Watchdog ‣ PROFIBUS uplink configuration via on-board switches or via .GSD file ‣ 1x D-sub 9-pin female PROFIBUS connector
Profinet-IO	RS-232	LAN	AB7013	‣ Complete PROFINET-IO Soft-Real-Time (RT) communication ‣ Max 512 bytes of Input and 512 bytes of Output data ‣ Up to 64 slots / 1 sub slot ‣ Cyclic data exchange (10 ms cycle time) ‣ Acyclic Data exchange (Record Data Requests) ‣ Baud rate 10/100 Mbit/s ‣ TCP/IP Configuration via DCP (Discovery and Configuration Protocol) ‣ PROFINET uplink configuration via .GSDML file ‣ 1x RJ45 network connector

3. Features and benefits

- When converting the protocol, the Communicator acts as Master on the serial network
- Enables any automation device with a serial RS-232/422/485 Slave interface to participate on a network
- No hardware or software changes are required for the connected automation device
- Compatible with PLC's from leading manufacturers such as Siemens, Rockwell, Schneider Electric etc.
- Complete protocol conversion performed by the Communicator, no PLC function blocks required
- Handy Save/Load function means a completed configuration can be re-used for many other installations

4. Technical specifications

Dimension (L x W x H)	120 x 75 x 27mm (4.72 x 2.95 x 1.06")
Weight	150g (0.33lbs)
Operating Temperature	0 ~ +55°C (0 ~ +131°F)
Storage Temperature	-40 ~ +85°C (-40 ~ +185°F)
Power Supply	24Vdc
Current Consumption	Max. 200mA (Typical 100mA)
Serial Application Interface	Selectable RS-232, RS-422, RS-485
Max Stations	31 nodes via RS-422 or RS-485
Galvanic Isolation	On both serial and BUS/Ethernet side
Mechanical Rating	IP20, NEMA rating 1
Mounting	DIN-rail (EN 50022 standard)
Protocol: Modbus RTU	Modbus RTU Master – Request/Response
Protocol: ASCII/Vendor Specific	Request/Response or Produce/Consume
Protocol: Rockwell DF1	DF1 Master
Certifications	CE, UL, c-UL, RoHS

5. External view

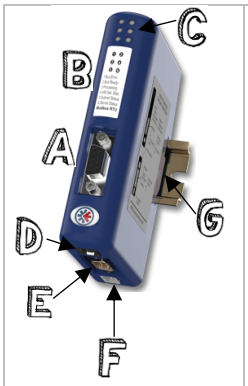				
AB7010	*AB7028*	*AB7072*	*AB7000*	*AB7013*

A	Fieldbus connector
B	Configuration switches
C	Status LEDs
D	PC connector
E	Subnetwork connector
F	Power connector
G	DIN-rail connector

1 G3, G4.5, and G5 V02

1.1 Modbus TCP (via P4 CPU LAN port)

Read D[illegible]s[illegible]rete [illegible]ts [illegible]F[illegible] 0[illegible]

Address	S[illegible]e [illegible]B[illegible]t[illegible]	T[illegible]tle	[illegible]al[illegible]e	Re[illegible]ar[illegible]
0	[illegible]	LA[illegible] [illegible]or[illegible]al[illegible]Mode Sele[illegible]ted	0 or [illegible]	[illegible]o[illegible][illegible]a[illegible]d Mode
[illegible]	[illegible]	Lo[illegible]al Mode Sele[illegible]ted	0 or [illegible]	[illegible]o[illegible][illegible]a[illegible]d Mode
[illegible]	[illegible]	Re[illegible]ote Mode Sele[illegible]ted	0 or [illegible]	[illegible]o[illegible][illegible]a[illegible]d Mode
3	[illegible]	Ser[illegible]e Mode Sele[illegible]ted	0 or [illegible]	[illegible]o[illegible][illegible]a[illegible]d Mode
4	[illegible]	*Reserved*	0 or [illegible]	
[illegible]	[illegible]	*Reserved*	0 or [illegible]	
6	[illegible]	*Reserved*	0 or [illegible]	
[illegible]	[illegible]	*Reserved*	0 or [illegible]	
8	[illegible]	Wa[illegible]t Stat[illegible]s	0 or [illegible]	O[illegible]erat[illegible]o[illegible] Stat[illegible]s
[illegible]	[illegible]	Read[illegible] Stat[illegible]s	0 or [illegible]	O[illegible]erat[illegible]o[illegible] Stat[illegible]s
[illegible]0	[illegible]	[illegible]rror Stat[illegible]s	0 or [illegible]	O[illegible]erat[illegible]o[illegible] Stat[illegible]s
[illegible][illegible]	[illegible]	[illegible][illegible]load Stat[illegible]s	0 or [illegible]	O[illegible]erat[illegible]o[illegible] Stat[illegible]s
[illegible][illegible]	[illegible]	Load Stat[illegible]s	0 or [illegible]	O[illegible]erat[illegible]o[illegible] Stat[illegible]s
[illegible]3	[illegible]	War[illegible][illegible] Stat[illegible]s	0 or [illegible]	O[illegible]erat[illegible]o[illegible] Stat[illegible]s
[illegible]4	[illegible]	R[illegible][illegible] Stat[illegible]s	0 or [illegible]	O[illegible]erat[illegible]o[illegible] Stat[illegible]s
[illegible][illegible]	[illegible]	*Reserved*	0 or [illegible]	
[illegible]6	[illegible]	[illegible][illegible]rre[illegible]t Mode Sele[illegible]ted	0 or [illegible]	O[illegible]erat[illegible]o[illegible] Mode
[illegible][illegible]	[illegible]	Flow Mode Sele[illegible]ted	0 or [illegible]	O[illegible]erat[illegible]o[illegible] Mode
[illegible]8	[illegible]	*Reserved*	0 or [illegible]	
[illegible][illegible]	[illegible]	[illegible]o[illegible]t Mode Sele[illegible]ted	0 or [illegible]	O[illegible]erat[illegible]o[illegible] Mode
[illegible]0	[illegible]	DO Mode Sele[illegible]ted	0 or [illegible]	O[illegible]erat[illegible]o[illegible] Mode
[illegible][illegible]	[illegible]	*Reserved*	0 or [illegible]	
[illegible][illegible]	[illegible]	*Reserved*	0 or [illegible]	
[illegible]3	[illegible]	*Reserved*	0 or [illegible]	

Write S□□□le □oil □F□ 0□□

Address	S□□e □B□t□	T□tle	□al□e	Re□ar□
0	□	Start	0 or □	
□	□	Sto□	0 or □	
□	□	Load	0 or □	
3	□	□□load	0 or □	

Read □old□□□ Re□sters □F□ 03□

Address	S□□e □B□te□	T□tle	S□ale	Re□ar□
0	□	F□lter D□□ere□t□al □ress□re □d□□	⅞ □000	0 – □ □□s□□
□	□	D□s□□ar□e □ress□re □o□□□	⅞ □0	0 – □□ □□s□□
□	□	□□ta□e A□ Te□ □erat□re □T□□	□ □	-4 – 3□6°F
3	□	D□s□□ar□e A□ Te□ □erat□re □T□□	□ □	-4 – 3□6°F
4	□	Motor S□eed	□ □0	0 – □0□000 □□0□000 □ □00□000 r□□ □
□	□	Motor □□rre□t	□ □	0 – □000 □A□
6	□	□ower	□ □	0 – 300 □□W□
□	□	□ol□□ e Flow	□ □	0 – □0□000 □□□□ □
8	□	□rror □ode	□ □	0 – □□□
□	□	Set □al□e	□ □	0 – □00
□0	□	DO Se□sor □al□e	⅞ □0	0 – □0.0 □□□□ □
□□	□	D□-I□□□ □olta□e	□ □	0 – □000 □□d□□
□□	□	R□□ T□□ e	□ □	0 – 6□□3□ □□□

Write S□□□le Re□ster □F□ 06□

Address	S□□e □B□te□	T□tle	S□ale	Re□ar□
□3	□	Set □al□e	x 1	0 – □00

1.2 Modbus TCP (via AB7072 Anybus communicator)

Read □□□□t Re□ister □F□ 04□

Address	S□□e □B□te□	T□tle	S□ale	Re□ar□
0	□	F□lter D□□ere□t□al □ress□re □d□□	⁒ □000	0 – □ □□s□□
□	□	D□s□□ar□e □ress□re □o□□□	⁒ □0	0 – □□ □□s□□
□	□	□□ta□e A□ Te□ □erat□re □T□□	□ □	-4 – 3□6°F
3	□	D□s□□ar□e A□ Te□ □erat□re □T□□	□ □	-4 – 3□6°F
4	□	Motor S□eed	□ □0	0 – □0□000 □□0□000 □ □00□000 r□□ □
□	□	Motor □□rre□t	□ □	0 – □000 □A□
6	□	□ower	□ □	0 – 300 □□W□
□	□	□ol□□ e Flow	□ □	0 – □0□000 □□□□ □
8	□	□rror □ode	□ □	0 – □□□
□	□	Set □al□e	□ □	0 – □00
□0	□	DO Se□sor □al□e	⁒ □0	0 – □0.0 □□□□ □
□□	□	D□-I□□□ □olta□e	□ □	0 – □000 □□d□□
□□	□	R□□ T□□ e	□ □	0 – 6□□3□ □□□
□3	□	□o□ □a□d Mode	□ – 4	□: LA□ □□: Lo□al 3: Re□ ote□4: Ser□□□e
□4	□	O□erati□□ Stat□s	0 – 8	0: Wait□□: Read□ □: □rror□4: □□load 8: Load
□□	□	O□erati□□ Mode	0 – 4	0: □□rre□t□□: Flow 3: □o□t□4: DO

Wr□te S□□□le Re□ister □F□ 06□

Address	S□□e □B□te□	T□tle	□al□e	Re□ar□
0	□	O□erati□□ Mode	0 – 4	0: □□rre□t□□: Flow 3: □o□t□4: DO
□	□	Set □al□e	0 – □00	
□	□	□o□ □a□d	0 – 8	□: Start□□: Sto□ 4: □□load□8: Load

1.3 EtherNet/IP (via AB7072 Anybus communicator)

Read Addresses

Address	Size (Byte)	Title	Scale	Remark
0	2	Filter Differential Pressure Read	0.001	0 – 65.535
1	2	Discharge Pressure Low	0.01	0 – 655.35
2	2	Intake Air Temperature	0.1	-40 – 376°F
3	2	Discharge Air Temperature	0.1	-40 – 376°F
4	2	Motor Speed	1.0	0 – 60,000 (0 – 60,000 = 0 – 100,000 rpm)
5	2	Motor Current	0.1	0 – 6553.5 (A)
6	2	Power	0.1	0 – 3000 (kW)
7	2	Volume Flow	0.1	0 – 60,000 (m³/min)
8	2	Error Code	1.0	0 – 9999
9	2	Set Value	0.1	0 – 100
10	2	DO Sensor Value	0.01	0 – 10.00 (mg/l)
11	2	DC-Link Voltage	0.1	0 – 6553.5 (Vdc)
12	2	Run Time	1.0	0 – 65,535 (h)
13	2	Load Mode	0 – 4	0: LAN, 1: Local 3: Remote, 4: Service
14	2	Operation Status	0 – 8	0: Wait, 1: Ready 2: Error, 4: Unload 8: Load
15	2	Operation Mode	0 – 4	0: Current, 1: Flow 3: Out, 4: DO

Write Addresses

Address	Size (Byte)	Title	Value	Remark
0	2	Operation Mode	0 – 4	0: Current, 1: Flow 3: Out, 4: DO
1	2	Set Value	0 – 100	
2	2	Load	0 – 8	1: Start, 2: Stop 4: Unload, 8: Load

2 G4.5 IG5, G5 V03, and G5plus

2.1 Modbus TCP (via AB7072 Anybus communicator)

Read □□□t Re□ister □F□ 04□

Address	S□e □B□te□	T□tle	S□ale	Re□ar□
0	□	F□lter D□□ere□t□al □ress□re □d□□	⁒ □000	0 – □ □□s□□
□	□	D□s□□ar□e □ress□re □o□□□	⁒ □0	0 – □□ □□s□□
□	□	□□ta□e A□ Te□ □erat□re □T□□	□ □	-4 – 3□6°F
3	□	D□s□□ar□e A□ Te□ □erat□re □T□□	□ □	-4 – 3□6°F
4	□	Motor S□eed	□ □0	0 – □0□000 □□0□000 □ □00□000 r□□ □
□	□	Motor □ □rre□t	⁒ □0	0 – □000 □A□
6	□	□ower	□ □	0 – 300 □□W□
□	□	□ol□□ e Flow	□ □	0 – □0□000 □□□□□ □
8	□	□rror □ode	□ □	0 – □□□
□	□	Set □al□e	□ □	0 – □00
□0	□	DO Se□sor □al□e	⁒ □0	0 – □0.0 □□□□ □
□□	□	D□-l□□□ □olta□e	⁒ □0	0 – □000 □□d□□
□□	□	R□□ T□□ e	□ □	0 – 6□□3□ □□□
□3	□	□o□ □a□d Mode	□ – 4	□: LA□□□: Lo□al 3: Re□ ote□4: Ser□□□e
□4	□	O□erat□o□ Stat□s	0 – 8	0: Wa□t□□: Read□ □: □rror□4: □□load 8: Load
□□	□	O□erat□o□ Mode	0 – 4	0: □□rre□t□□: Flow 3: □o□t□4: DO
□6	□	War□□□□ Stat□s	0 – □	0: □o War□□□□□□: War□□□□

Wr□te S□□□le Re□ister □F□ 06□

Address	S□e □B□te□	T□tle	□al□e	Re□ar□
0	□	O□erat□o□ Mode	0 – 4	0: □□rre□t□□: Flow 3: □o□t□4: DO
□	□	Set □al□e	0 – □00	
□	□	□o□ □a□d	0 – 8	□: Start□□: Sto□ 4: □□load□8: Load

2.2 EtherNet/IP (via AB7072 Anybus communicator)

Read Addresses

Address	Size (Byte)	Title	Scale	Remarks
0	2	Filter Differential Pressure (Pa)	1/10000	0 – 10 kPa
1	2	Discharge Pressure (Pa)	1/10	0 – 100 kPa
2	2	Intake Air Temperature	1/10	-40 – 360°F
3	2	Discharge Air Temperature	1/10	-40 – 360°F
4	2	Motor Speed	1/10	0 – 60000 (0–6000 = 0–600.0 rpm)
5	2	Motor Current	1/10	0 – 1000 (A)
6	2	Power	1/10	0 – 3000 (W)
7	2	Volume Flow	1/10	0 – 60000 (0.0–6000.0 CFM)
8	2	Error Code	1/10	0 – 1000
9	2	Set Value	1/10	0 – 100
10	2	DO Sensor Value	1/10	0 – 10.0 (0.0–1.0 V)
11	2	DC-Bus Voltage	1/10	0 – 1000 (Vdc)
12	2	Run Time	1/10	0 – 65535 (hours)
13	2	Load Mode	1 – 4	1: LAN, 2: Local 3: Remote, 4: Service
14	2	Operation Status	0 – 8	0: Wait, 1: Ready 2: Error, 4: Unload 8: Load
15	2	Operation Mode	0 – 4	0: Current, 1: Flow 3: Out, 4: DO
16	2	Warning Status	0 – 1	0: No Warning, 1: Warning

Write Addresses

Address	Size (Byte)	Title	Value	Remarks
0	2	Operation Mode	0 – 4	0: Current, 1: Flow 3: Out, 4: DO
1	2	Set Value	0 – 100	
2	2	Load	0 – 8	1: Start, 2: Stop 4: Unload, 8: Load

3 MultiCore V03 / Rental

- 0603-T-6 M□lt□□ore T□r□o □roto□ol Ma□□al □□: □AM□SA□□□-A□□ro□ed Do□□□ e□t data□ase□

4 Reference

- 060□-A-6 A□□□□s □o□□□□rat□o□ F□le □o□ □at□□lt□ Matr□□ □□: □AM□SA□□□-A□□ro□ed Do□□□ e□t data□ase□
- 0604-T-6 T□r□o A□□□□s S□□□et □a□le S□e□□□at□o□ □□: □AM□SA□□□-A□□ro□ed Do□□□ e□t data□ase□

SECTION 5

Harmonics & Power Quality

HARMONICGUARD® PASSIVE

TCI's HarmonicGuard® Passive gives you options.

Our HGP 5% harmonic filter has factory options available to meet your specific requirements, such as:

- Contactor - Can be used to disconnect capacitors to prevent leading power factor.
- Fuse Monitor - Will detect a fuse failure.
- Heater - Protects internal filter electronics from corrosion and condensation.
- Vibration Pads - Reduces audible noise.
- Floor Stand - 12" steel feet for Type 3R enclosures 125hp and below. Units 150 hp and above include provisions for floor mounting.

Custom designs are available upon request.

HarmonicGuard® Passive Filter

- Limits current harmonic distortion to less than 5% over a wide load range
- True 100kA SCCR
- IEEE 519-2014 compliant
- Increases drive uptime
- Eliminates nuisance tripping

Generator Compatible Option

TCI also offers a generator compatible filter- HarmonicGuard® - Low Capacitance (HGL). The introduction of the HGL addresses concerns of excess capacitance when used with a generator. Contact TCI for more information.

iTHD% vs. % Load

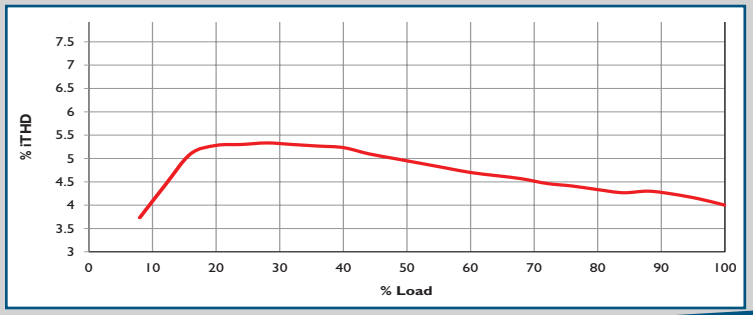

HGP Filters vs. Other Harmonic Solutions

Today's marketplace has provided numerous products intended to address harmonics and power quality issues in industrial applications.

Compared to 18-pulse drives, the HGP:

- Is a more efficient and reliable solution at reduced loads
- Has a better iTHD at reduced loads
- Saves money by reducing operation costs and energy loss
- Has a smaller footprint

Compared to Active Front End, the HGP:

- Does not require input (LCL and EMI/RFI) filters as AFE does.
- Is a more cost effective solution.
- Produces no ground leakage current.

Application

The HGP filter is a drive applied 5% passive harmonic filter. High quality components and a robust design allow this passive filter to deliver best in class performance under the harshest conditions and in the most challenging applications.

Typical Applications

- Oil & Gas
- Steel Industry
- Water/Wastewater
- HVAC Systems
- Machining
- Airports
- Commercial Buildings
- Hospitals
- Irrigation Fields, Farms
- Extruders
- Pulp & Paper

TCI® Advancing Power Quality

Technical Specifications

Voltage / Frequency Rating	208, 240, 480 & 600 VAC- 60 Hz	380 - 415 VAC- 50 Hz
Phase	3Ø	
Motor drive input power rating range	208, 240 VAC: 5 - 100 Hp 480, 600 VAC: 5 - 1250 Hp	400 VAC: 4 - 1000 KW
SCCR (Short Circuit Current Rating)	100 kA	
Immunity from Voltage Distortion	Less than 5% iTHD at full load with vTHD as high as 5%*	
THID	Less than 5% at full load	
Efficiency	Greater than 99%	
Overload Capability	200% of current rating for 3 minutes	
Environmental Conditions		
Operating Temperature	Open: 50°C (122°F), Enclosed: 40°C (104°F)	
Storage Temperature	60°C (140°F)	
Elevation	Up to 2,000 m without derating. Consult factory for higher elevations.	
Humidity	95% non-condensing	
Protection Category	Open Chassis, UL Type 1, UL Type 3R, and UL Type 12 enclosure	
Cooling Method	Natural or Forced Air Convection	
Reference Technical Standards		
Agency Approvals	cULus	

Part Numbering System

H G P 0 1 5 0 L X 1 S 0 0 0 P

Series:

Rating (HP - 60 Hz) (kW - 50 Hz):

Voltage Rating:
- A - 480 V
- B - 240 V
- C - 600 V
- D - 208 V
- L - 380 - 415 V

Frequency:
- W - 60 Hz (HP Rated)
- X - 50 Hz (kW Rated)

Enclosure:
- 0 - Open
- 1 - Type 1
- 2 - Type 12
- 3 - Type 3R

Option:
- S - Standard
- C - Contactor
- F - Contactor and Fuse Monitor
- G - Standard & Fuse Monitor

Option:
- 0 - Standard

Option:
- 0 - Standard
- F - Floor Stand (for 150 HP and below Type 3R)

Option:
- 0 - Typical Voltage Distortion
- 1 - High Voltage Distortion

Option:
- 0 - Standard
- H - Heater (only available on Type 3R Enclosures)
- P - Oilfield Version
- V - Vibration Pads

One-Line Diagram

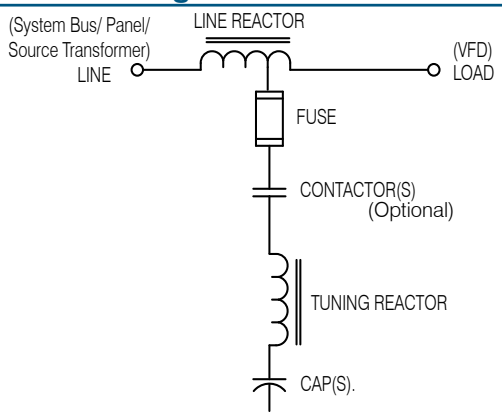

Current Distortion (iTHD) vs. Background Voltage Distortion (vTHD)

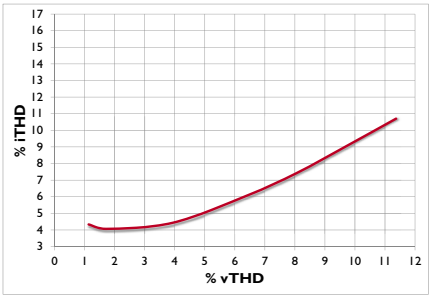

**When configured for High Background Voltage Distortion. See IOM for guidelines for distortion above 5%.*

TCI, LLC
www.transcoil.com
W132 N10611 Grant Drive
Germantown, WI 53022
USA
Toll Free: 800-824-8282
P: 414-357-4480
F: 414-357-4484

Part #28559
Version 1.10
© Copyright 2017

c UL US LISTED

Made in U.S.A.

HGP0200AW1C0000

HGP, 480V, 200HP, 3 Phase, 60 Hz, Type 1, Passive Harmonic Filter, Contactor Option

PRODUCT INFORMATION

SKU: HGP0200AW1C0000. Categories: Input, Harmonic Filter, HGP.

SPECIFICATIONS

Rated Voltage	480
Hertz (Hz)	60
Horsepower (HP)	200
Phase	3
Amps	240
Enclosure Type	UL Type 1
Watts Loss	1500
Country of Origin	US
Connectivity	None
Isolation Contactor	Contactor
Dimensions	Height: 70 in Width: 20 in Depth: 20 in
Weight	500 lbs

HGP Open Part Number	Schematic Drawing #	Approx Weight (LBS)
HGP0200AW0S0000	28697-S	345
HGP0200AW0C0000	28697	350
HGP0200AW0S1000	29597-PQ1	347
HGP0200AW0C1000	29597-PQ	352

HGP Part Number	HorsePower (HP)	kVar	Harmonic	Voltage (V)	Maximum Amps (A)	Hz.	Phase
HGP0200AW----	200	60	5th	480	240	60	3

Note: For Torque Information See IOM Manual.

Customer Connections.
L1, L2, L3, T1, T2, T3
Wire Range: Two, 350MCM to 2AWG.

HGP Eclosed Type 1 Part Number	Schematic Drawing #	Approx Weight (LBS)
HGP0200AW1S0000	28697-S	496
HGP0200AW1C0000	28697-4	500
HGP0200AW1S1000	29597-PQ1	497
HGP0200AW1C1000	29597-PQ	501

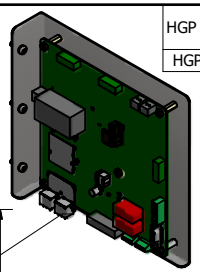

PQConnect Board
Optional

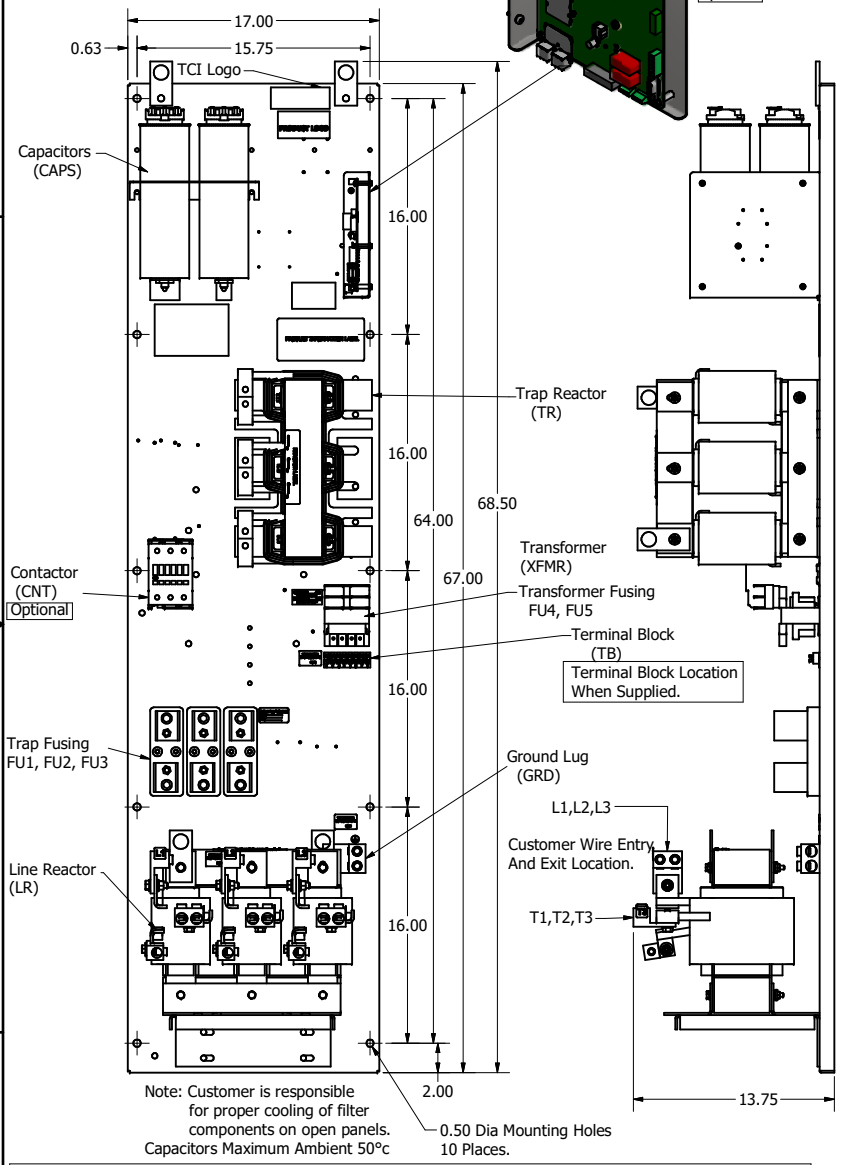

Note: Customer is responsible for proper cooling of filter components on open panels. Capacitors Maximum Ambient 50°c

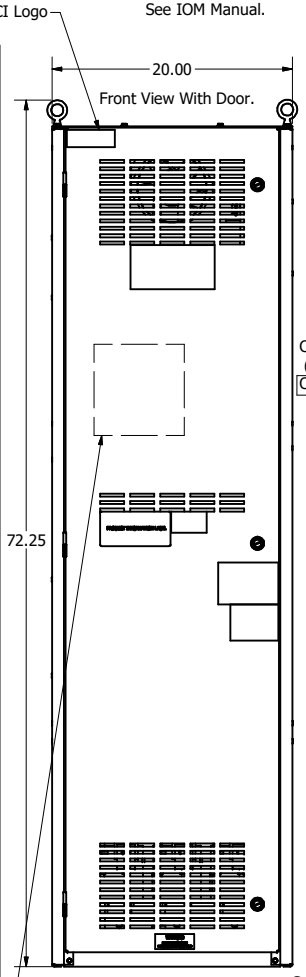

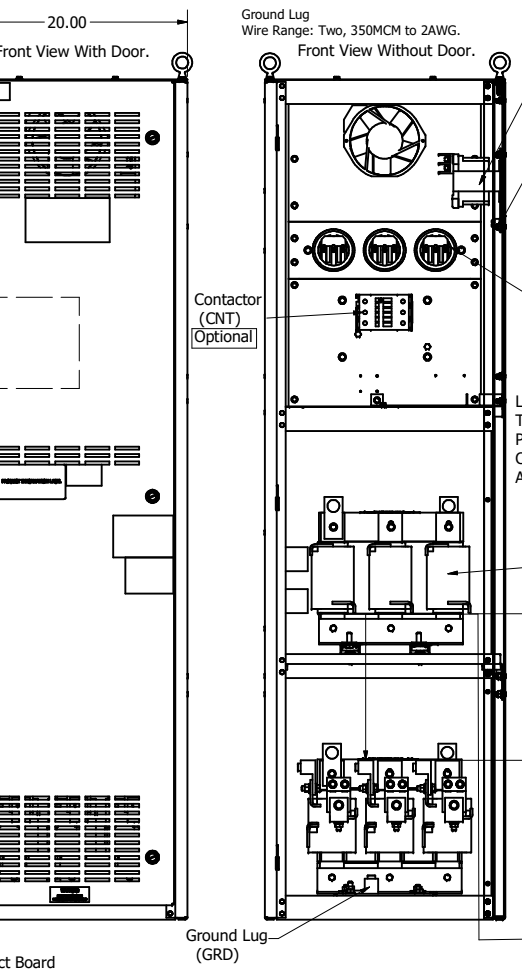

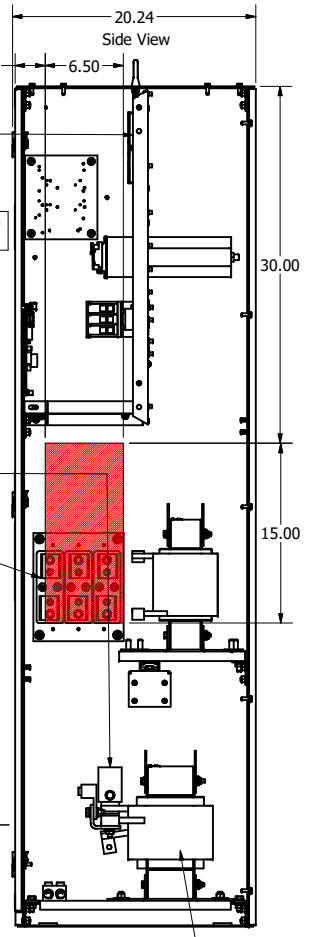

PQConnect Board
Mounted on Front
Door Of Enclosure.
Optional

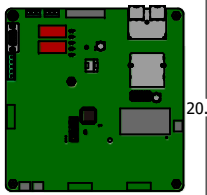

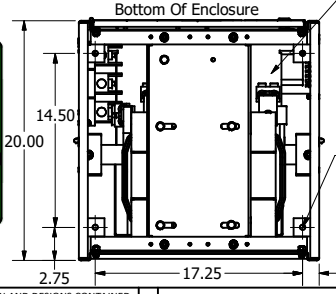

200HP = 240 Amps
Bend Radius
2 x 350kcmil, Is 12 Inches.

1 x 350kcmil, Is 12 Inches.

2 x 1/ØAWG, Is 5 Inches.

Customer Is Responsible For Installation to Meet All National And Local Electrical Codes.

Material(s) Shall be RoHS Compliant

HGP0200AW-----				
Components	0S0000/1S0000	0C0000/1C0000	0S1000/1S1000	0C1000/1C1000
Line Reactor (LR)	X	X	X	X
Trap Reactor (TR)	X	X	X	X
Capacitor (Cap)	X	X	X	X
Trap Fusing, FU1, FU2, FU3	X	X	X	X
Contactor (CNT)		X		X
Transformer (XFMR)	X (Type 1)	X	X	X
XFMR Fusing, FU4, FU5	X (Type 1)	X	X	X
PQConnect Board			X	X

THE INFORMATION AND DESIGNS CONTAINED IN THIS DRAWING ARE CONFIDENTIAL AND THE PROPRIETARY PROPERTY OF ALLIED MOTION TECHNOLOGIES INC. AND ITS SUBSIDIARIES. NEITHER THIS DESIGN NOR ANY INFORMATION CONTAINED IN THIS DRAWING MAY BE REPRODUCED OR DISCLOSED TO OTHERS WITHOUT THE EXPRESS WRITTEN CONSENT OF ALLIED MOTION TECHNOLOGIES INC. AND ITS SUBSIDIARIES.

NO	REVISION	DATE	BY
G	5471, Drawing Updates,Wire Entry Details	1/12/2021	DSW

TOLERANCES (EXCEPT AS NOTED)
DECIMAL
.XX ± .25
.XXX ± .10
FRACTIONAL
± 1/16
ANGULAR
± 1°

TCI
An Allied Motion Company
W132N10611 Grant Drive
Germantown, WI 53022
© 2021 TCI, LLC

HGP0200AW------, HarmonicGuard Passive
HGP, 200HP, 480/3/60, Open and Type 1

DRN. BY: DSW | DATE: 4/2/2014 | 105490DG
SCALE: 1/6 | APRVD: | SIZE: C
SHT 1 OF 2

HGP, 200HP, 480/3/60, Type 1, Bottom Entry Detail

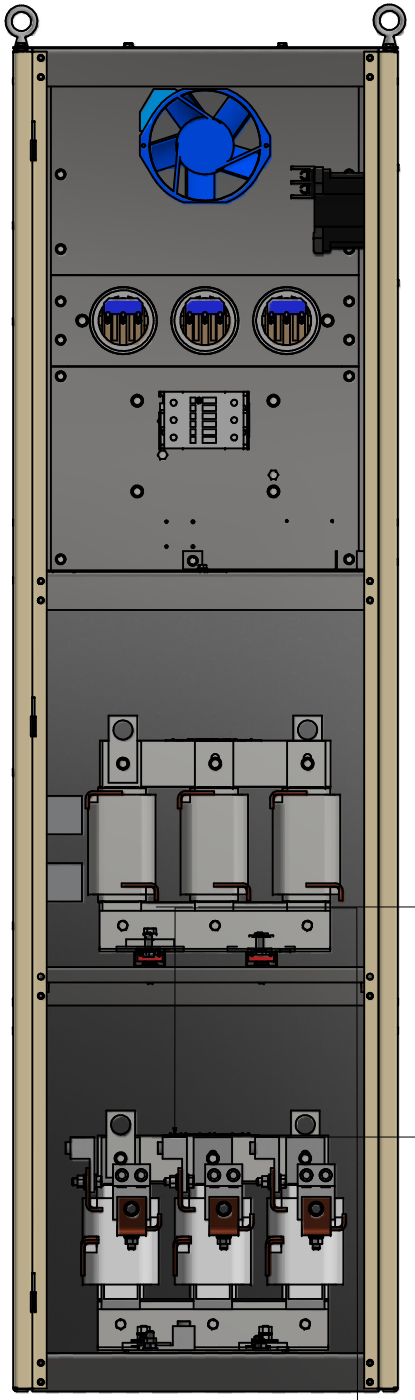

200HP = 240 Amps
Bend Radius
2 x 350kcmil, Is 12 Inches.

1 x 350kcmil, Is 12 Inches.

2 x 1/ØAWG, Is 5 Inches.

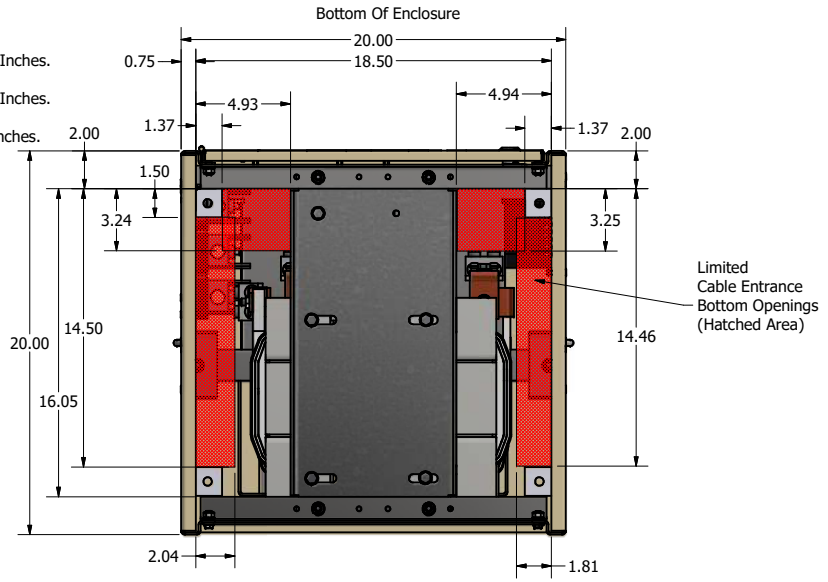

Customer Is Responsible For Installation to Meet All National And Local Electrical Codes.

Material(s) Shall be RoHS Compliant

THE INFORMATION AND DESIGNS CONTAINED IN THIS DRAWING ARE CONFIDENTIAL AND THE PROPRIETARY PROPERTY OF ALLIED MOTION TECHNOLOGIES INC. AND ITS SUBSIDIARIES. NEITHER THIS DESIGN NOR ANY INFORMATION CONTAINED IN THIS DRAWING MAY BE REPRODUCED OR DISCLOSED TO OTHERS WITHOUT THE EXPRESS WRITTEN CONSENT OF ALLIED MOTION TECHNOLOGIES INC. AND ITS SUBSIDIARIES.

NO	REVISION	DATE	BY
	See Sheet 1 For Revisions		

TOLERANCES (EXCEPT AS NOTED)
DECIMAL
.XX ± .25
.XXX ± .10
FRACTIONAL
± 1/16
ANGULAR
± 1°

TCI An Allied Motion Company
W132N10611 Grant Drive
Germantown, WI 53022
© 2021 TCI, LLC

HGP, 200HP, 480/3/60, Type 1
Bottom Entry Detail

DRN. BY: DSW
DATE: 12/14/2020
105490DG
SCALE: 1/5
APRVD:
SIZE: C
SHT 2 OF 2

480V.
60 HZ.
LINE

FUSED DISCONNECT
OR CIRCUIT BREAKER
(CUSTOMER SUPPLIED)

L1
L2
L3

CUSTOMER CONNECTIONS

T1
T2 LOAD
T3

CUSTOMER CONNECTIONS

75 HP AND BELOW : USE MINIMUM 60°C COPPER WIRE
ABOVE 75 HP : USE MINIMUM 75°C COPPER WIRE

FACTORY POWER CONNECTIONS

L3 L2 L1

T1 T2 T3

LR
A1 A2
AT
B1 B2
BT
C1 C2
CT

FUSE
Fu1a
Fu2a
Fu3a

CNT

TR

CAPACITOR
BLEEDER RESISTORS

RB

CAP(s)

SCHEMATIC FOR FUSE MONITOR, OPTION

CONNECTIONS FOR
FUSE MONITOR
OPTION

CONTROL CONNECTIONS

480V.
L2 4
2
3
L1 1
Fu5
Fu4
XFMR.
X2
120 V.
X1
GRD.

NOTE 1:
FOR PROPER OPERATION
CONNECT AUXILIARY N.O.
RUN RELAY CONTACT
FROM DRIVE

TB1
SEE NOTE 1
TB2
A1 A2
CNT
CONTACTOR
COIL

X2 CNT A1 CNT A2

TERMINAL BLOCK ON PANEL

TB
1 2 3 4 5 6 7 8

SEE NOTE 1
XFMR X1

CONNECT TO TR C
CONNECT TO TR B
CONNECT TO TR A

6 5 4 3

FUSE
MONITOR

7 8 1 2

TB
5 6 7 8
NO. C NC.

TERMINAL BLOCK ON PANEL

TCI, LLC CLAIMS PROPRIETARY RIGHTS IN THE MATERIAL HEREIN DISCLOSED. IT IS SUPPLIED WITHOUT PREDJUDICE TO ANY PATENT RIGHTS OF TCI AND MAY NOT BE REPRODUCED OR USED TO MANUFACTURE ANYTHING SHOWN THEREIN WITHOUT WRITTEN PERMISSION FROM TCI.

NO	REVISION	DATE	BY
D	MONITOR FUSING NOT NEEDED	1/10/17	DSW
C	3178 MONITOR TO CAP SIDE OF TR	9/8/14	DSW
B	3088 MONITOR UPDATE	4/25/14	DSW

TOLERANCES (EXCEPT AS NOTED)
DECIMAL
.XX ± NA
.XXX± NA
FRACTIONAL
± NA
ANGULAR
± NA

W132 N10611 GRANT DRIVE
GERMANTOWN, WI 53022

HARMONICGUARD PASSIVE
480V SCHEMATIC
15HP TO 200HP OPEN AND ENCLOSED TYPE1,

DRN. BY DSW
DATE 9/12/13
DWG. NO. 28697
SCALE NONE
SIZE C
SHT. 1 OF1

SECTION 6

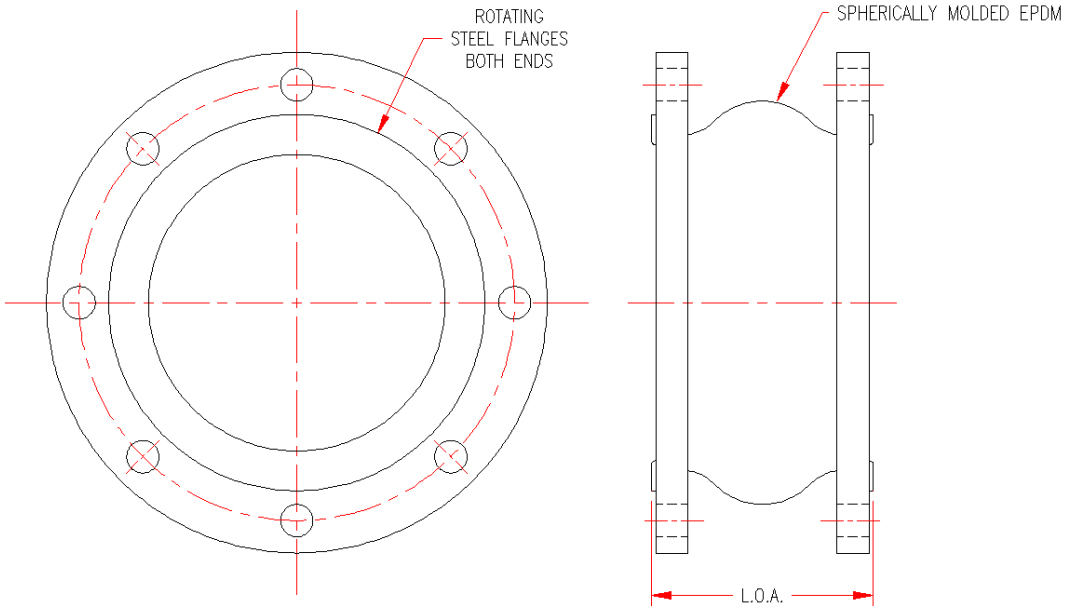

Spherical Molded Expansion Joints

Description:

□□a□s□o□ □o□ts □o□ □e□sate □or t□er□al e□□a□s□o□ o□□ro□ess piping w□t□ a□ elasto□er t□at □s Ny□on T□re □ord re□□□or□ed s□□er□all□ □olded □□DM.
T□e e□ds are rotat□□□ steel 15□# A□S□la□□es.
T□e te□ □erat□re □s rated to 300° F (149° C) at 2□ PSI or less.
□as□ets are □ot re□□□red □ro□ded t□e e□□a□s□o□ □□t □s □ated a□a□□st a □lat □a□ed □la□□e.

Materials of Construction:

- Fla□□es are zinc □lated □ar□o□ steel.
- □lasto□er □s □□DM.

Fla□□e S□□e	Wt. □L□s.)	L.O.A.	A□□al □o□ □ress□o□*	A□□al □□te□s□o□*	Lateral De□le□t□o□*	□art Numb er
□-□/□	1□.3	6□	□/□□	3/8□	□/□"	□1-00442□-0□□
3	□4	6□	□/□□	3/8□	□/□"	2□-00442□-03
4	18.3	6□	3/4□	1/2□	□/□"	2□-00442□-04
5	2□.8	6□	3/4"	1/□□	□/□□	□□-0044□6-05
6	2□.8	6□	3/4□	1/2□	□/□"	2□-00442□-06
8	40.6	6□	3/4□	1/2□	□/□"	2□-00442□-08
□0	5□.6	8□	□"	5/8□	3/4"	2□-00442□-1□
□2	83	8□	□"	5/8□	3/4□	□□-0044□6-□2
□4	□□□	8□	□"	5/8□	3/4"	2□-00442□-□4
□6	□6□	8□	□"	5/8□	3/4"	2□-00442□-1□
□8	□68	8□	□"	5/8□	3/4"	2□-00442□-□8
□0	□7□	8□	□"	5/8□	3/4"	2□-00442□-2□
□4	□□□	1□□	□"	5/8□	3/4"	2□-00442□-□4
□□o□-□o□□rre□t □o□e□e□t						

AERZEN

Aerzen USA Corporation
□08 □de□e□de□□e Wa□□ □oates□lle□□A □□3□0
Tel: □6□0□380-0□44 Fa□ □6□0□380-0□□8 www.aer□e□□sa.□o□

Spherical Molded Expansion Joints

Date	Doc #	Page
01/0□/□014	T-6-032□ re□s□o□ A	1 o□□

Butterfly Valve

Description: The Butterfly Valve is available in either wafer or lug style, and is designed to fit between 150# ANSI Flanges. The valve provides a complete seal eliminating a need for flange gaskets. The valve is rated for 250 PSI (17.2 Bar).

Materials of construction:

-Body is made of Cast Iron (ASTM A126 Class B)

-Disc is made of Aluminum Bronze (B148 UNS C945000)

-Stem is made of 416 Stainless Steel (ASTM A582 Type 416)

-Seal is made of EPDM (-20°F to 250°F) or
Fluoroelastomer (0º F to 300º F) Viton® or equivalent

-Bearing is made of Teflon® Gar-Fil®

-Pin is made of Carbon Steel

Wafer Style

			Up to 12 PSIG (0.8 Bar)* -20 to 250º F (-29 to121º C)	Up to 14.7 PSIG (1 Bar)* 0 to 300º F (-18 to 149º C)
	Pipe Size	(Lbs./Kg)	Part No.	Part No.
Lever Actuator	3”	12 / 5.5	21-001741-03-06	21-001741-03-07
	4”	22 / 10	21-001741-04-06	21-001741-04-07
	5”	24 / 11	21-001741-05-06	21-001741-05-07
	6”	34 / 15.5	21-001741-06-06	21-001741-06-07
	8”	41 / 18.6	21-001741-08-06	21-001741-08-07
	10”	63 / 28.6	21-001741-10-06	21-001741-10-07
Gear Actuator	12”	130 / 59	21-001741-12-06	21-001741-12-07
	14”	164 / 75	21-001741-14-06	21-001741-14-07
	16”	201 / 91.3	21-001741-16-06	21-001741-16-07
	20”	371 / 168.6	21-001741-20-06	21-001741-20-07

Lug Style

			Up to 12 PSIG (0.8 Bar)* -20 to 250º F (-29 to121º C)	Up to 14.7 PSIG (1 Bar)* 0 to 300º F (-18 to 149º C)
	Pipe Size	(Lbs./Kg)	Part No.	Part No.
Lever Actuator	3”	16 / 7.3	21-001741-03-08	21-001741-03-09
	4”	20 / 9.1	21-001741-04-08	21-001741-04-09
	5”	32 / 14.5	21-001741-05-08	21-001741-05-09
	6”	36 / 16.4	21-001741-06-08	21-001741-06-09
	8”	49 / 22.3	21-001741-08-08	21-001741-08-09
	10”	69 / 31.4	21-001741-10-08	21-001741-10-09
Gear Actuator	12”	163 / 74.1	21-001741-12-08	21-001741-12-09
	14”	180 / 81.8	21-001741-14-08	21-001741-14-09
	16”	250 / 113.6	21-001741-16-08	21-001741-16-09
	20”	436 / 198.2	21-001741-20-08	21-001741-20-09

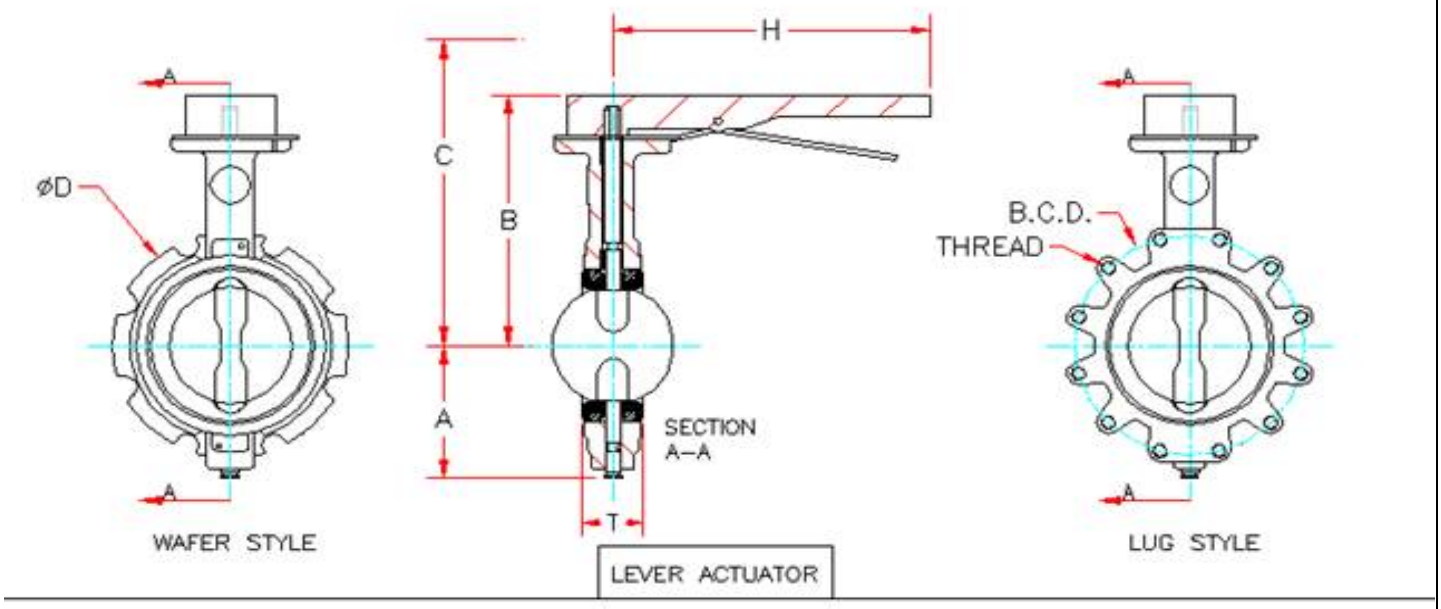

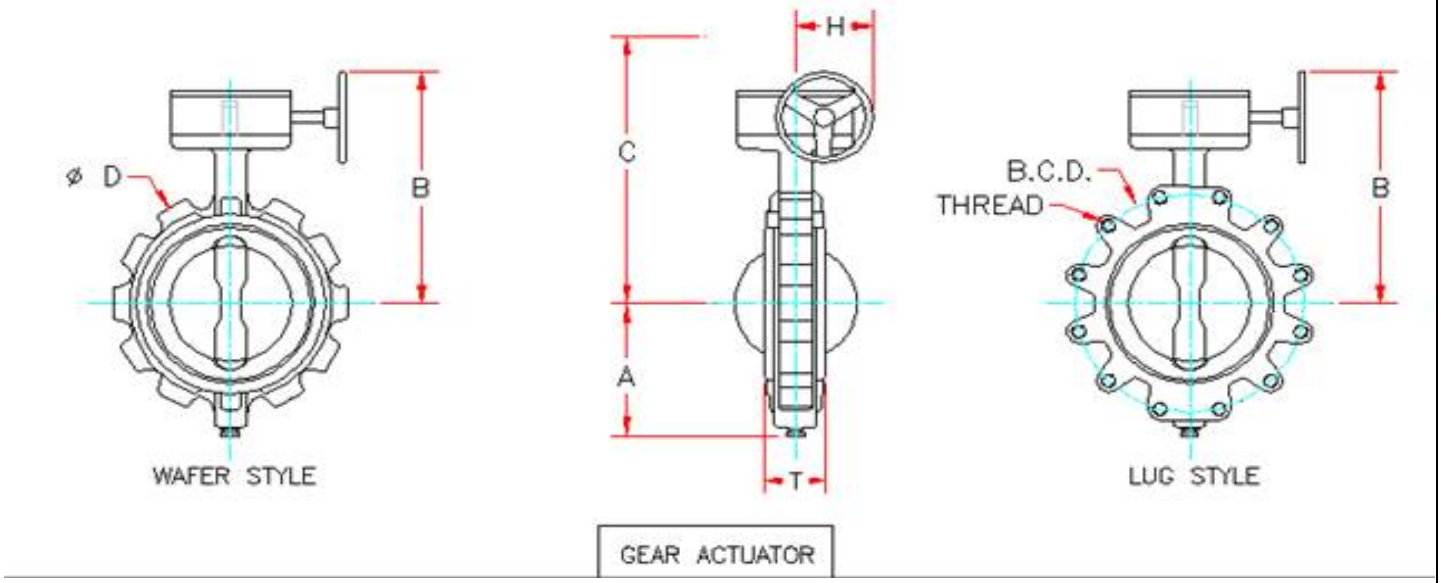

Pipe Size		D	T	A	B	C*	H	THREAD	B.C.D.
Lever Actuator	3”	6.25”	1.75”	3.54”	8.00”	9.50”	10.50”	5/8”-11	6.00”
	4”	7.81”	2.00”	4.63”	8.75”	10.25”	10.50”	5/8”-11	7.50”
	5”	8.75”	2.13”	5.69”	9.25”	10.75”	10.50”	3/4”-10	8.50”
	6”	9.75”	2.14”	6.37”	9.88”	11.38”	14.00”	3/4”-10	9.50”
	8”	12”	2.35”	7.94”	11.12”	12.62”	14.00”	3/4”-10	11.75”
	10”	14.5”	2.63”	9.38”	12.50”	14.75	14.00”	7/8”-9	14.25”
Gear Actuator	12”	17.5”	3.00”	10.69”	16.60”	18.85”	6.00”	7/8”-9	17.00”
	14”	19.5”	3.06”	11.12”	20.77”	23.00”	9.07”	1”-8	18.75”
	16”	22.06”	4.01”	12.25”	22.27”	24.50”	9.07”	1”-8	21-25”
	20”	25.68”	4.99”	14.06”	24.45”	26.75”	10.72”	1-1/8”-7	25”

C* - Clearance required for maintenance

Wafer Style Dual Disc Check Valve

Description: The Check Valve is designed to prevent back flow in the system, with minimal pressure loss to help maximize the unit's efficiency. This is a Wafer Style Dual Disc Check Valve. The two seal disc's are held shut by a spring, and have a low cracking pressure. This Check Valve may be used for vertical and horizontal applications. When installed in a horizontal flow position, the shaft must be aligned vertically. The valve body is marked to aid in positioning.

The Check Valve operating temperature is -40°F to 300°F (-40º C to 149º C) and 125 PSI (8.6 Bar).

Materials of construction:

-The Check Valve body is made of cast Carbon Iron (ASTM A126, Class B)

-The two discs are of either Stainless Steel or Bronze Alloy

-The seal between the casing and the discs is made of EPDM elastomer

- Teflon Thrust Washers

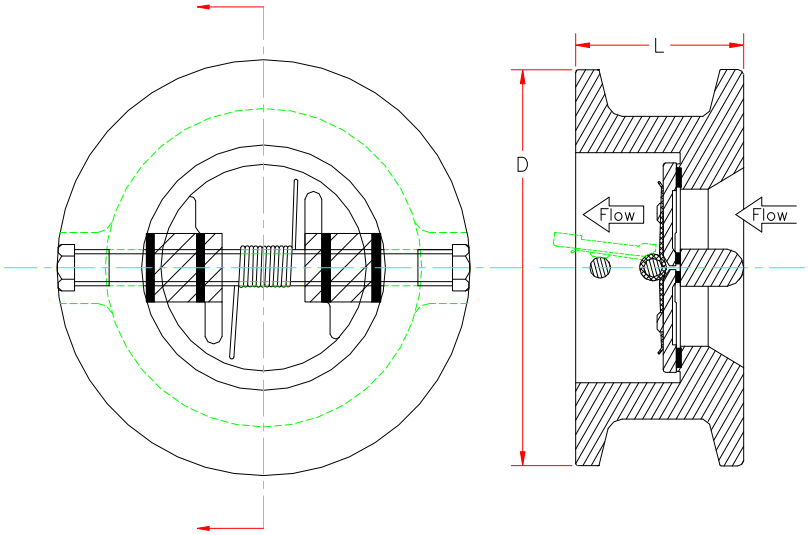

Size	Diameter "D"		Length "L"		Weight		Part No.
3"	5-3/8"	137 mm	2-1/4"	57 mm	7 lbs.	3 kg.	21-001713-03-02
4"	6-7/8"	175 mm	2-1/2"	64 mm	14 lbs.	6 kg.	21-001713-04-02
5"	7-3/4"	197 mm	2-3/4"	70 mm	20 lbs.	9 kg.	21-001713-05-02
6"	8-3/4"	222 mm	3 "	76 mm	27 lbs.	12 kg.	21-001713-06-02
8"	11"	279 mm	3-3/4"	95 mm	51 lbs.	23 kg.	21-001713-08-02
10"	13-3/8"	340 mm	4-1/4"	108 mm	80 lbs.	36 kg.	21-001713-10-02
12"	16-1/8"	410 mm	5-5/8"	143 mm	145 lbs.	66 kg.	21-001713-12-02
14"	17-3/4"	451 mm	7-1/4"	184 mm	180 lbs.	82 kg.	21-001713-14-02
16"	20-1/4"	514 mm	7-1/2"	191 mm	215 lbs.	98 kg.	21-001713-16-02
20"	23-7/8"	606 mm	8-5/8"	219 mm	340 lbs.	155 kg.	21-001713-20-02

Medium Filter

G5plus V02

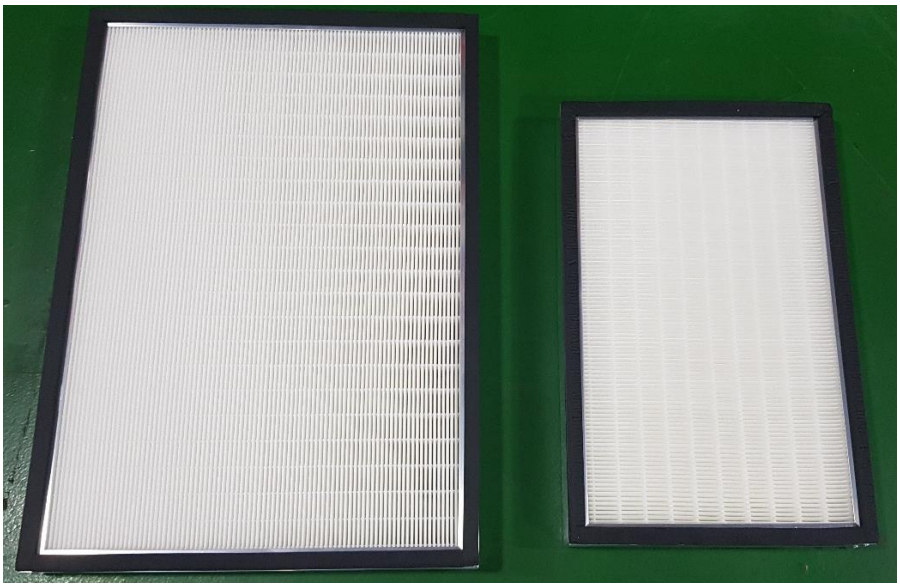

Distributor	Aerzen	Brand	Helmert			
	ATE	Ceada				
	Aerzen USA	Schomo	Park			

History

Version	Contents	Rev Date
00	Draft of technical document	

Index

1. GENERAL DESCRIPTION 3
1) Purpose 3
2) Feature 3

2. DESIGN OF PARTS 4
1) Design 4
2) Size and Dimensions 6

3. APPLICATION MODELS 7

4. PRIORITY 9

1. GENERAL DESCRIPTION

1) Purpose

The medium filter has a role that it doesn't do to enter dirty dust and particles in the ambient air into the turbo blower unit. It also protects the machine and inverter by blocking dust and particles from the outside. The medium filter is a consuming part that has to replaces periodically. The sealing on the medium filter is increased the reduction of leakage on the package. The airtightness was improved by installing a sealing to prevent air leaks. It is also a compact filter with a high-efficiency filtration of the package intake air. The material of the filter is ULPA (Class M) filter which has non-woven fabric. The material of the filter frame employed the aluminum that is more robust than paper. This not only extends the life of the filter but also easy to store.

2) Feature

- Sealing on the Filter: The new sealing is softer material than previous sealing on the Package Frame.
- Change to aluminum frame: More robust filter frame

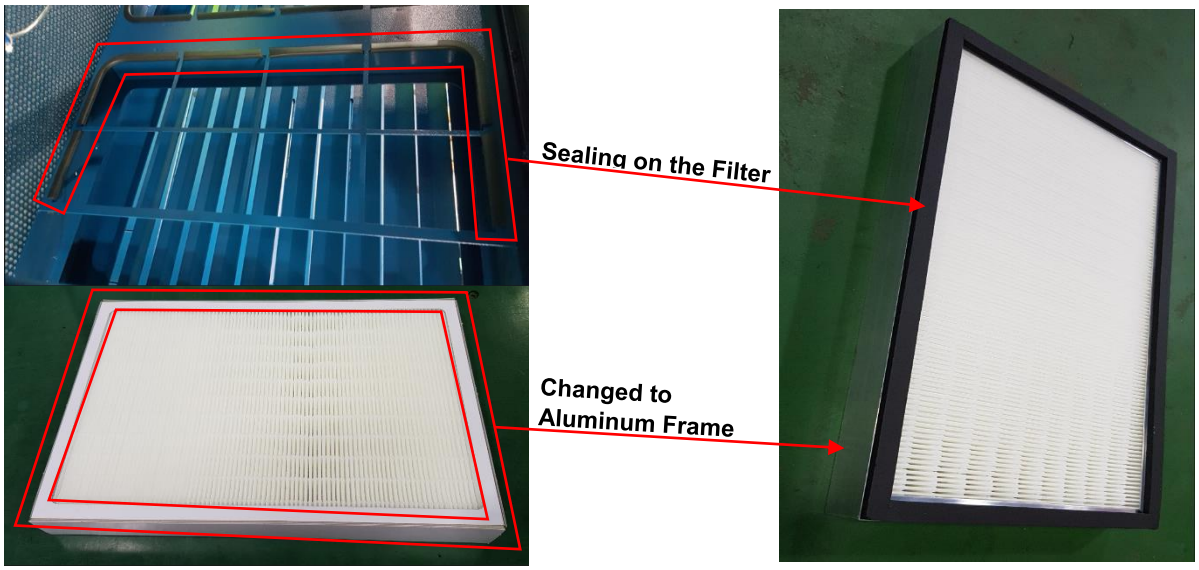

2. DESIGN OF PARTS

1) Design

- 25/50HP package

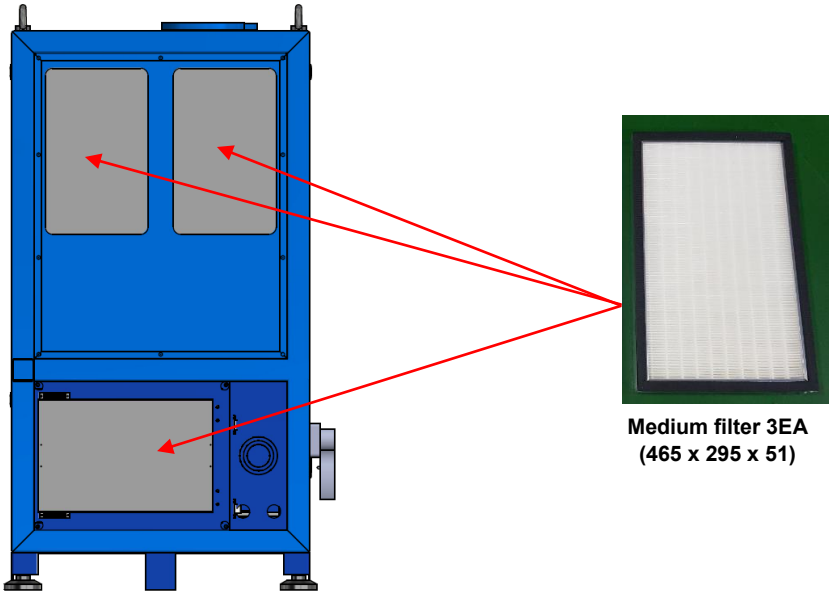

- 75/100HP package

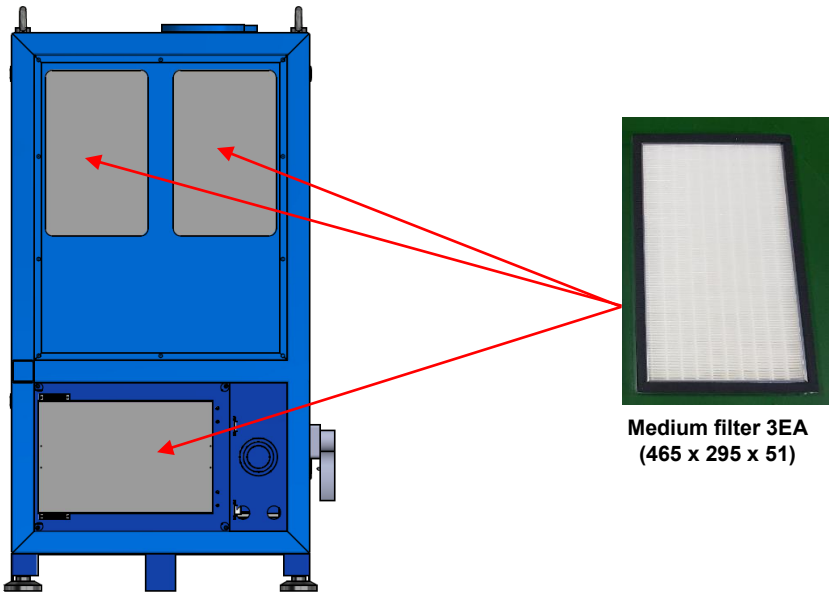

- 150/200HP package

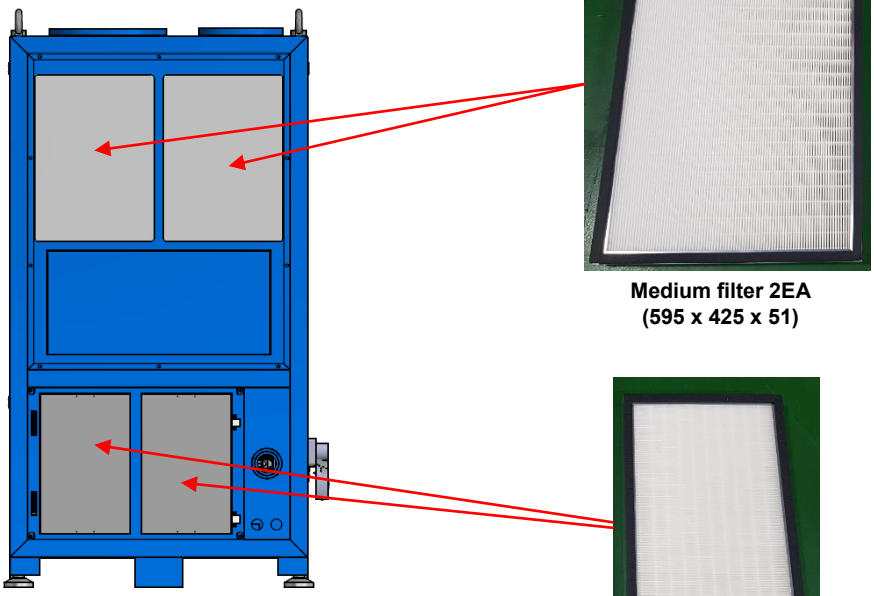

Medium filter 2EA
(595 x 425 x 51)

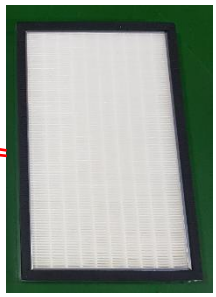

Medium filter 2EA
(465 x 295 x 51)

2) Size and Dimensions

- Large size (for only 150 to 200HP), 041-002990

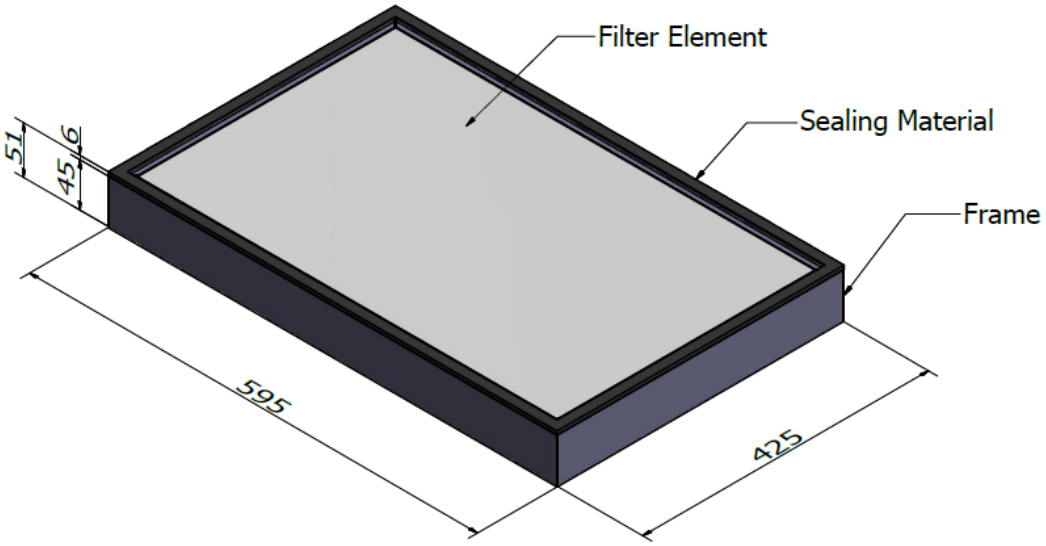

- Small size (for all package model), 041-002958

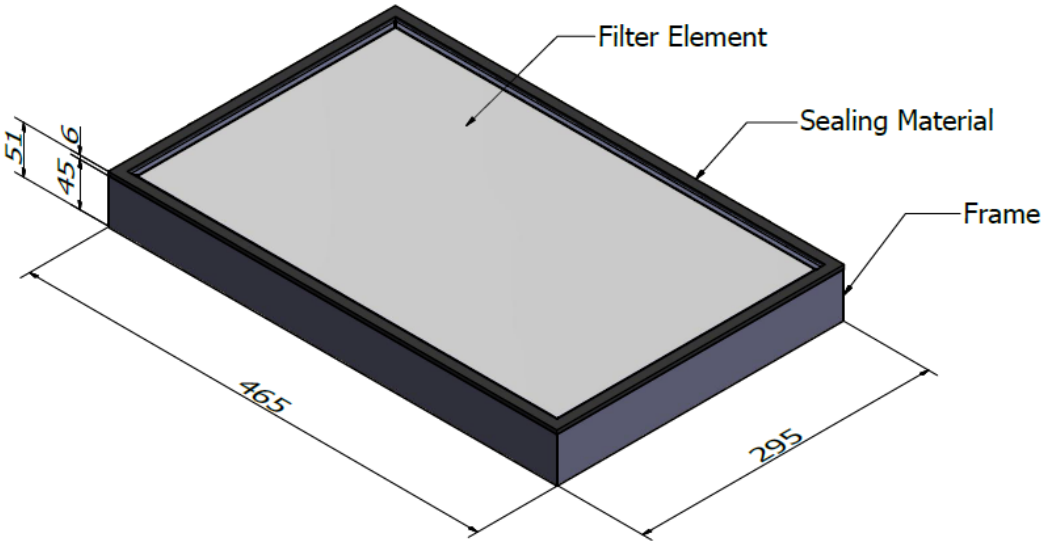

3. APPLICATION MODELS

T□r□o □lower □□t	□te□ □o.	S□□e □□ □ □	Q'ty (EA)
AT□□-0.8S □□.0 □□ T□□e □or □ □ □L□S	04□-00□□□8	46□□□□□□□□	3
AT□□-0.8S □□.0 □S T□□e □or □ □ □L□S	04□-00□□□8	46□□□□□□□□	3
AT□□-0.8S □□.0 □S T□□e □or □ □ □L□S	04□-00□□□8	46□□□□□□□□	3
AT□□-0.8S □□.0 □S T□□e □or □ □ □L□S	04□-00□□□8	46□□□□□□□□	3
AT□0-0.6S □□.0 □□ T□□e □or □ □ □L□S	04□-00□□□8	46□□□□□□□□	3
AT□0-0.6S □□.0 □S T□□e □or □ □ □L□S	04□-00□□□8	46□□□□□□□□	3
AT□0-0.6S □□.0 □S T□□e □or □ □ □L□S	04□-00□□□8	46□□□□□□□□	3
AT□0-0.6S □□.0 □S T□□e □or □ □ □L□S	04□-00□□□8	46□□□□□□□□	3
AT□0-0.8S □□.0 □□ T□□e □or □ □ □L□S	04□-00□□□8	46□□□□□□□□	3
AT□0-0.8S □□.0 □S T□□e □or □ □ □L□S	04□-00□□□8	46□□□□□□□□	3
AT□0-0.8S □□.0 □S T□□e □or □ □ □L□S	04□-00□□□8	46□□□□□□□□	3
AT□0-0.8S □□.0 □S T□□e □or □ □ □L□S	04□-00□□□8	46□□□□□□□□	3
AT□□-0.6S □□.0 □□ T□□e □or □ □ □L□S	04□-00□□□8	46□□□□□□□□	3
AT□□-0.6S □□.0 □S T□□e □or □ □ □L□S	04□-00□□□8	46□□□□□□□□	3
AT□□-0.6S □□.0 □S T□□e □or □ □ □L□S	04□-00□□□8	46□□□□□□□□	3
AT□□-0.6S □□.0 □S T□□e □or □ □ □L□S	04□-00□□□8	46□□□□□□□□	3
AT□□-0.8S □□.0 □□ T□□e □or □ □ □L□S	04□-00□□□8	46□□□□□□□□	3
AT□□-0.8S □□.0 □S T□□e □or □ □ □L□S	04□-00□□□8	46□□□□□□□□	3
AT□□-0.8S □□.0 □S T□□e □or □ □ □L□S	04□-00□□□8	46□□□□□□□□	3
AT□□-0.8S □□.0 □S T□□e □or □ □ □L□S	04□-00□□□8	46□□□□□□□□	3
AT□00-0.6S □□.0 □□ T□□e □or □ □ □L□S	04□-00□□□8	46□□□□□□□□	3
AT□00-0.6S □□.0 □S T□□e □or □ □ □L□S	04□-00□□□8	46□□□□□□□□	3
AT□00-0.6S □□.0 □S T□□e □or □ □ □L□S	04□-00□□□8	46□□□□□□□□	3
AT□00-0.6S □□.0 □S T□□e □or □ □ □L□S	04□-00□□□8	46□□□□□□□□	3
AT□00-0.8S □□.0 □□ T□□e □or □ □ □L□S	04□-00□□□8	46□□□□□□□□	3
AT□00-0.8S □□.0 □S T□□e □or □ □ □L□S	04□-00□□□8	46□□□□□□□□	3
AT□00-0.8S □□.0 □S T□□e □or □ □ □L□S	04□-00□□□8	46□□□□□□□□	3
AT□00-0.8S □□.0 □S T□□e □or □ □ □L□S	04□-00□□□8	46□□□□□□□□	3

T□r□o □lower □□t	□te□ □o.	S□□e □□ □ □	Q'ty (EA)
AT□00-□.0S □□.0 □□ T□□e □or □ □ □L□S	04□-00□□□8	46□□□□□□□□	3
AT□00-□.0S □□.0 □S T□□e □or □ □ □L□S	04□-00□□□8	46□□□□□□□□	3
AT□00-□.0S □□.0 □S T□□e □or □ □ □L□S	04□-00□□□8	46□□□□□□□□	3
AT□00-□.0S □□.0 □S T□□e □or □ □ □L□S	04□-00□□□8	46□□□□□□□□	3
AT□□0-0.6S □□.0 □□ T□□e □or □ □ □L□S	04□-00□□□8 / 04□-00□□□0	46□□□□□□□□ / □□□□4□□□□□	□ / □
AT□□0-0.6S □□.0 □S T□□e □or □ □ □L□S	04□-00□□□8 / 04□-00□□□0	46□□□□□□□□ / □□□□4□□□□□	□ / □
AT□□0-0.6S □□.0 □S T□□e □or □ □ □L□S	04□-00□□□8 / 04□-00□□□0	46□□□□□□□□ / □□□□4□□□□□	□ / □
AT□□0-0.6S □□.0 □S T□□e □or □ □ □L□S	04□-00□□□8 / 04□-00□□□0	46□□□□□□□□ / □□□□4□□□□□	□ / □
AT□□0-0.8S □□.0 □□ T□□e □or □ □ □L□S	04□-00□□□8 / 04□-00□□□0	46□□□□□□□□ / □□□□4□□□□□	□ / □
AT□□0-0.8S □□.0 □S T□□e □or □ □ □L□S	04□-00□□□8 / 04□-00□□□0	46□□□□□□□□ / □□□□4□□□□□	□ / □
AT□□0-0.8S □□.0 □S T□□e □or □ □ □L□S	04□-00□□□8 / 04□-00□□□0	46□□□□□□□□ / □□□□4□□□□□	□ / □
AT□□0-0.8S □□.0 □S T□□e □or □ □ □L□S	04□-00□□□8 / 04□-00□□□0	46□□□□□□□□ / □□□□4□□□□□	□ / □
AT□□0-□.0S □□.0 □□ T□□e □or □ □ □L□S	04□-00□□□8 / 04□-00□□□0	46□□□□□□□□ / □□□□4□□□□□	□ / □
AT□□0-□.0S □□.0 □S T□□e □or □ □ □L□S	04□-00□□□8 / 04□-00□□□0	46□□□□□□□□ / □□□□4□□□□□	□ / □
AT□□0-□.0S □□.0 □S T□□e □or □ □ □L□S	04□-00□□□8 / 04□-00□□□0	46□□□□□□□□ / □□□□4□□□□□	□ / □
AT□□0-□.0S □□.0 □S T□□e □or □ □ □L□S	04□-00□□□8 / 04□-00□□□0	46□□□□□□□□ / □□□□4□□□□□	□ / □
AT□00-0.8S □□.0 □□ T□□e □or □ □ □L□S	04□-00□□□8 / 04□-00□□□0	46□□□□□□□□ / □□□□4□□□□□	□ / □
AT□00-0.8S □□.0 □S T□□e □or □ □ □L□S	04□-00□□□8 / 04□-00□□□0	46□□□□□□□□ / □□□□4□□□□□	□ / □
AT□00-0.8S □□.0 □S T□□e □or □ □ □L□S	04□-00□□□8 / 04□-00□□□0	46□□□□□□□□ / □□□□4□□□□□	□ / □
AT□00-0.8S □□.0 □S T□□e □or □ □ □L□S	04□-00□□□8 / 04□-00□□□0	46□□□□□□□□ / □□□□4□□□□□	□ / □
AT□00-□.0S □□.0 □□ T□□e □or □ □ □L□S	04□-00□□□8 / 04□-00□□□0	46□□□□□□□□ / □□□□4□□□□□	□ / □
AT□00-□.0S □□.0 □S T□□e □or □ □ □L□S	04□-00□□□8 / 04□-00□□□0	46□□□□□□□□ / □□□□4□□□□□	□ / □
AT□00-□.0S □□.0 □S T□□e □or □ □ □L□S	04□-00□□□8 / 04□-00□□□0	46□□□□□□□□ / □□□□4□□□□□	□ / □
AT□00-□.0S □□.0 □S T□□e □or □ □ □L□S	04□-00□□□8 / 04□-00□□□0	46□□□□□□□□ / □□□□4□□□□□	□ / □
AT□□-0.8S □□.0 □S T□□e □or □ □ □L□S□□00□□	04□-00□□□8	46□□□□□□□□	3
AT□0-0.6S □□.0 □S T□□e □or □ □ □L□S□□00□□	04□-00□□□8	46□□□□□□□□	3
AT□0-0.8S □□.0 □S T□□e □or □ □ □L□S□□00□□	04□-00□□□8	46□□□□□□□□	3
AT□□-0.6S □□.0 □S T□□e □or □ □ □L□S□□00□□	04□-00□□□8 / 04□-00□□□0	46□□□□□□□□ / □□□□4□□□□□	□ / □
AT□□-0.8S □□.0 □S T□□e □or □ □ □L□S□□00□□	04□-00□□□8 / 04□-00□□□0	46□□□□□□□□ / □□□□4□□□□□	□ / □
AT□00-0.6S □□.0 □S T□□e □or □ □ □L□S□□00□□	04□-00□□□8 / 04□-00□□□0	46□□□□□□□□ / □□□□4□□□□□	□ / □
AT□00-0.8S □□.0 □S T□□e □or □ □ □L□S□□00□□	04□-00□□□8 / 04□-00□□□0	46□□□□□□□□ / □□□□4□□□□□	□ / □

4. PRIORITY

Critical	☐	Immediately	☐
High	☒	Upgrade	☒
Medium	☐		
Low	☐		

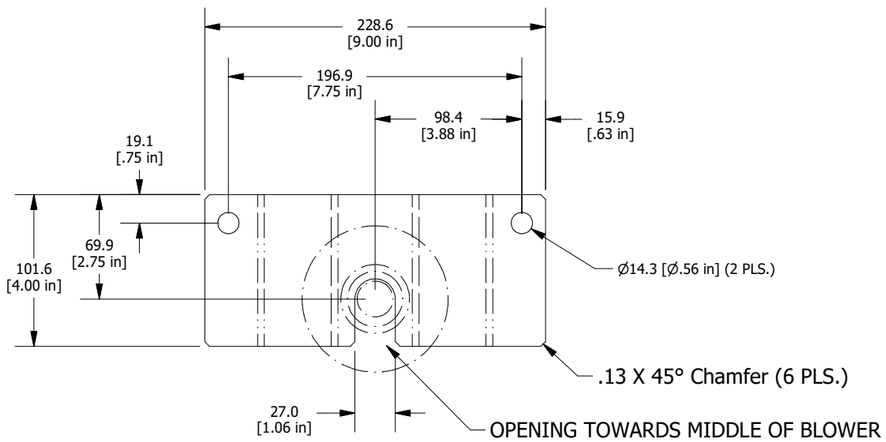

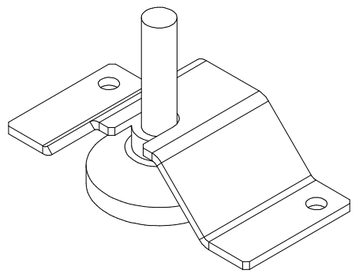

NOTES:

1. STANDARD TOLERANCE (UNLESS OTHERWISE NOTED):
   X.X" = ±0.06", X.XX" = ± 0.03", X.XXX" = ± 0.005"
   ANGULAR = ±1/4˚ (INCLUDES IMPLIED 90˚)
2. BREAK ALL SHARP EDGES
3. MATERIAL: A36 CARBON STEEL
4. POWDERCOAT RIVERROCK BLUE PER
   AERZEN DOCUMENT A-6-0450

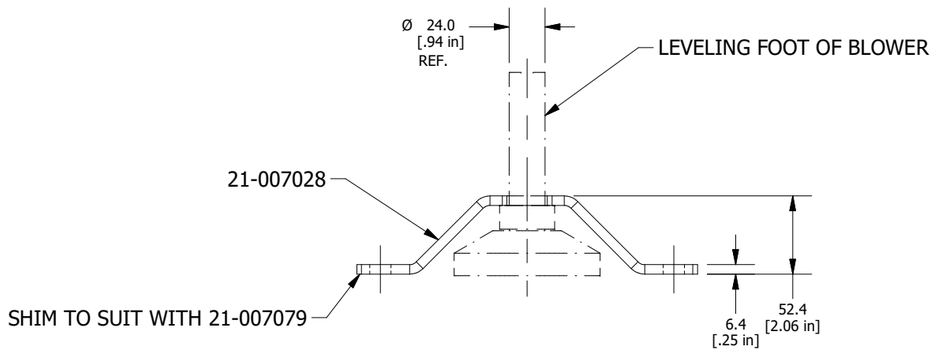

AERZEN

AERZEN USA CORPORATION
108 INDEPENDENCE WAY, COATESVILLE, PA.
PH: (610) 380-0244 FX: (610) 380-0278
WWW.AERZENUSA.COM

CLASS: I

	NAME	DATE
DRAWN	JPS	6/17/2019
CHECKED	DLM	6/17/2019
APPROVED		

DRAWING NO. HB-007774

NAVISION PN. 21-007027

TITLE
G5 PLUS TURBO BLOWER
CLAMP SET; 24 MM ADJUSTABLE FOOT

SCALE: | SHEET: 1 / 1

REV.	NAME	DATE

NOTICE: THIS DRAWING AND ALL INFORMATION HEREIN IS THE PROPERTY OF AERZEN USA INC. AND ITS SUBSIDIARIES AND SHALL NOT BE REPRODUCED BY ANY MEANS IN WHOLE OF IN PART USED AS THE BASIS FOR MANUFACTURE WITHOUT WRITTEN PERMISSION

Remote Air Inlet Filter
6 Inch to 16 Inch Pipe Connection

Description: A remote air inlet filter offers the ability to filter inlet air at a distance from the blower/compressor. The assembly contains a cartridge style filter in a durable housing with an easily removable weatherhood. The housing is of steel construction with a semi-gloss enamel finish. The weatherhood is an ABS composite that may be painted. It contains an industrial grade pleated paper filter with an efficiency of 99.5% at 2 microns. The process connection is through a pipe flange drilled to match 125/150 lb. ANSI connections.

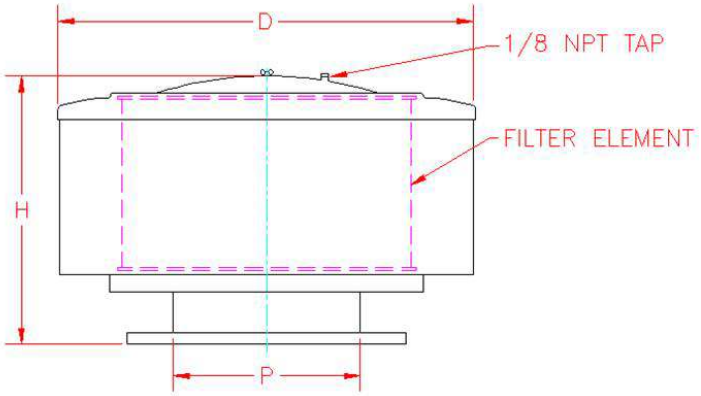

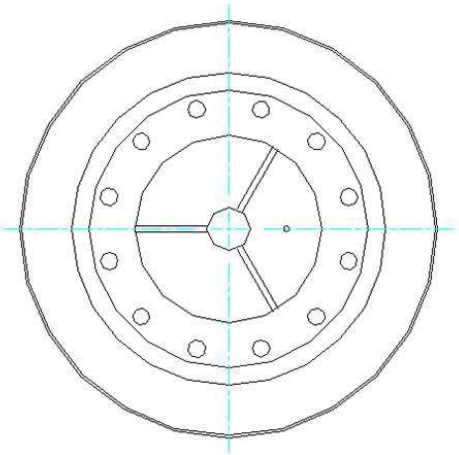

Part Number	Pipe Flange Connection P (inch)	D (inch)	L (inch)	Flow Capacity (CFM)	Weight Lbs.	Replacement Element
21-004547-06	6	18.00	13.31	1,100	31	(1) 21-004550
21-004547-08	8	20.00	21.88	2,200	43	(2) 21-004550
21-004547-10	10	24.00	15.38	3,000	52	(1) 21-004551
21-004547-12	12	24.00	15.38	4,300	64	(1) 21-004551
21-004547-16	16	30.00	19.38	7,700	101	(1) 21-004552

Aerzen USA Corporation
108 Independence Way – Coatesville, PA 19320
Tel: (610) 380-0244 Fax: (610) 380-0278
www.aerzenusa.com

SECTION 7

OPERATION AND MAINTENANCE INSTRUCTIONS

AERZEN TURBO BLOWER G5^{plus}

AT25-0.8S, AT50-0.6S, AT50-0.8S
AT75-0.6S, AT75-0.8S, AT100-0.6S, AT100-0.8S, AT100-1.0S
AT150-0.6S, AT150-0.8S, AT150-1.0S, AT200-0.8S, AT200-1.0S

Read the instructions prior to performing any task!
Keep for future reference.

Original Instructions
Document number: OMTB-G5P-V030-EN
©2020 Aerzen Turbo Co., Ltd.

AERZEN

Aerzen Turbo Blower
G5plus

O&M Instructions

INFORMATION

SAFETY

STORAGE

INSTALLATION

OPERATION

MAINTENANCE

TROUBLESHOOTING

©2020 Aerzen Turbo Co., Ltd.

Production site: Aerzen Turbo Europe GmbH
Braasstraße 7, 31737 Rinteln
Germany
www.aerzen.com

Production site: Aerzen Turbo Americas
108 Independence Way, Coatesville, PA 19320
United States
Tel.:+1 610 380 0244
www.aerzen.com/en-us

Manufacturer: Aerzen Turbo. Co., Ltd
63 Geumhoseonmal-gil, Bugang-myeon
Sejong 30077
Korea
Tel.: +82 44 277 6500
www.aerzen-turbo.com

Copyright @2020 Aerzen Turbo Co. Ltd.
All rights reserved

©2020 Aerzen Turbo Co., Ltd.

These instructions are published by:
Aerzen Turbo Co., Ltd.

Reproduction of the contents of this publication, fully or in part, is forbidden in accordance with copyright laws without prior written permission from Aerzen Turbo Co., Ltd. KOREA.

OMTB-G5P-V030-EN
EFFECTIVE: 2020-07-01

Content

1 GENERAL INFORMATION 7

1.1 Introduction 7

1.2 Safety symbol descriptions 7

1.3 Specifications 9

1.4 Overview 9

1.5 Technical description of the machine 12
1.5.1 Impeller 12
1.5.2 Air foil bearing 12
1.5.3 Variable frequency drive 13
1.5.4 Permanent magnet synchronous motor 13
1.5.5 Blow off valve 13
1.5.6 Blower control system 13
1.5.7 Auto surge protection 13
1.5.8 LCD display (HMI; human machine interface) 13
1.5.9 Sensors 14
1.5.10 Auxiliary components 14
1.5.11 Option 14

2 SAFETY 15

2.1 Precautions – prior to and during operation 15

2.2 General safety instructions 15

2.3 Safety devices 17
2.3.1 Main circuit breaker 17
2.3.2 Lock-out / Tag-out 18
2.3.3 Emergency stop button 18

3 STORAGE 20

3.1 Storage up to 30 days 20

3.2 Storage longer than 30 days 20

4 INSTALLATION 21

4.1 Inspection of the blower components 21

4.2 Installation location 23

4.3 Operations and maintenance area 24

4.4 Preparation before installation 26

4.5 Transport 27

©2020 Aerzen Turbo Co., Ltd.

4.6 Piping 29
4.6.1 Discharge piping 29
4.6.2 Piping connection 32

4.7 Intake system 35

4.8 Pre-filter(optional) 36

4.9 Ducted inlet configuration 37

4.10 Other precautions 37
4.10.1 Pneumatic conveying applications 37
4.10.2 Connecting and operation in parallel with Positive Displacement blowers 38
4.10.3 Additional pressure losses 39

4.11 Power cable and ground 39

4.12 Insulation resistance 40

4.13 Control wiring 40

4.14 Commissioning after installation 40

5 OPERATION 41

5.1 Local operation 41
5.1.1 HMI screen description 41
5.1.2 Start and stop 52
5.1.3 Emergency stop 52

5.2 I/O Terminal Block operation 53
5.2.1 Signals 53
5.2.2 Procedure for I/O Terminal Block control 54

5.3 Fieldbus operation 54

5.4 Unacceptable operating practices 54

5.5 Recommended operating practices 55

6 MAINTENANCE 56

6.1 Safety instructions 56
6.1.1 Improperly performed maintenance work 56
6.1.2 Securing the machine against restarting 56
6.1.3 Electric currents 56
6.1.4 Requirements for personnel 57
6.1.5 Protective equipment 57
6.1.6 Special tools 57

6.2 Important reminders 57

6.3 Maintenance schedule 58

6.4 Air filter replacement 58

©2020 Aerzen Turbo Co., Ltd.

6.5 Pre-filter replacement (optional) 58

6.6 Replacement parts 59

7 TROUBLESHOOTING 60

7.1 Safety instructions 60
7.1.1 Improper fault rectification 60
7.1.2 Securing the machine against restarting 60
7.1.3 Electric currents 60
7.1.4 Requirements for personnel 61
7.1.5 Protective equipment 61
7.1.6 Special tools 61
7.1.7 Behavior in the event of faults 61

7.2 Faults at ready status 62

7.3 Warnings during running 62

7.4 Faults during running 64

8 REVISION HISTORY 66

©2020 Aerzen Turbo Co., Ltd.

1 GENERAL INFORMATION

1.1 Introduction

These instructions allow for safe and efficient handling of AERZEN Turbo Blower series G5^{plus}. These instructions are an integral part of the machine and must be kept in immediate vicinity of the machine so that they are accessible to personnel at all times. Keep these instructions in a safe place for future reference. The personnel must have read these instructions carefully and have understood fully it before beginning the work. The fundamental requirement for working safely is compliance with all specified safety notes and guidelines in these instructions. In addition, local occupational health and general safety regulations apply to the machine's range of applications.

WARNING!

Read, be sure to clearly and completely understand, and then carefully follow all the directions included in these instructions. Failure to adhere to the guidelines and specific instructions provided could cause equipment damage and/or serious personal injury or death.

The illustrations included in these instructions show certain selected models by way of an example. They serve to provide the user with basic understanding and may deviate somewhat from actual design and dimension.

NOTICE!

Aerzener Maschinenfabrik and its subsidiaries are released from any warranty and liability regarding a replacement for consequential damages if the technical operating limits are not observed and/or the safety guidelines outlined in these instructions are not followed. The same applies to equipment failures resulting from improper maintenance. It is not a liability for any secondary failure or damage caused by the machine.

1.2 Safety symbol descriptions

The safety instruction is illustrated using symbols. The safety instruction is organized into signaling words which designate the level of danger posed.

Table 1-1 Safety symbols

Symbol	Term	Definition
	DANGER!	This combination of symbol and signaling word points to an imminently dangerous situation that could be fatal or lead to serious injury if it is not avoided.
	WARNING!	This combination of symbol and signaling word points to a potentially dangerous situation that could be fatal or lead to serious injury if it is not avoided.
	CAUTION!	This combination of symbol and signaling word points to a potentially dangerous situation that could lead to minor injuries if it is not avoided.
	NOTICE!	This combination of symbol and signaling word points to a potentially dangerous situation that could lead to material damage if it is not avoided.

To draw attention to operating guidelines, events, listings, references and other elements in these instructions, the following designations are used;

Table 1-2 Safety labels

No.	Labels	Position	Comments
1		Left panel: Base of blower unit near BUS BAR	CAUTION PROTECTIVE EARTH **Establish and maintain protective earth ground according to the O&M instructions.**
2		Left panel	WARNING ELECTRIC SHOCK HAZARD **Electric current is still alive when the machine stops. This unit is to be serviced by trained personnel only.**
3		Three panels: Except back panel	WARNING NOISE HAZARD **Wear approved ear protection in this area.**
4		Top panel: Near exit of motor cooling air discharge	WARNING HOT SURFACE **Do not touch.** **TURN OFF POWER and allow to cool before servicing.**
5		Front panel	WARNING AVOID INJURY **This unit is to be serviced by trained personnel only.**
6		Front panel	WARNING READ OPERATORS MANUAL **Read and understand O&M instructions and all other safety instructions before using this equipment.**

©2020 Aerzen Turbo Co., Ltd.

1.3 Specifications

General specifications of Aerzen Turbo Blower series G5^{plus} are shown in Table 1-3.

Table 1-3 General specifications

Item	Specification	Comment
Type	Turbo blower with PM motor/air bearing/VFD	
Medium	Air according to IEC 60721-3-3 class 3C3	
Flow Control	By speed variation	
Motor Drive	Inverter driven with VFD control	
Voltage / Frequency	400/440/480Vrms, 50/60 Hz, 3-phase	
Blow Off Valve	Solenoid controlled	
Cooling	Air-cooled	
Vibration	Below 2mm/s (0.08 inch/s)	
Sound Noise	74 dB(A) ~ 76 dB(A)	@ 1m in free field conditions without pipe noise
Operational Ambient Temperature	-20°C ~ +45°C (-4°F ~ +113°F)	Higher ambient temperatures upon request
Humidity	Max. 95% RH without any condensation	
Atmosphere	Max. 2000 m above sea level	Higher elevation upon request

The blower name plate shown in Fig. 1-1 is located on the left-side panel of the blower package. The nameplate contains data specific to the blower model.

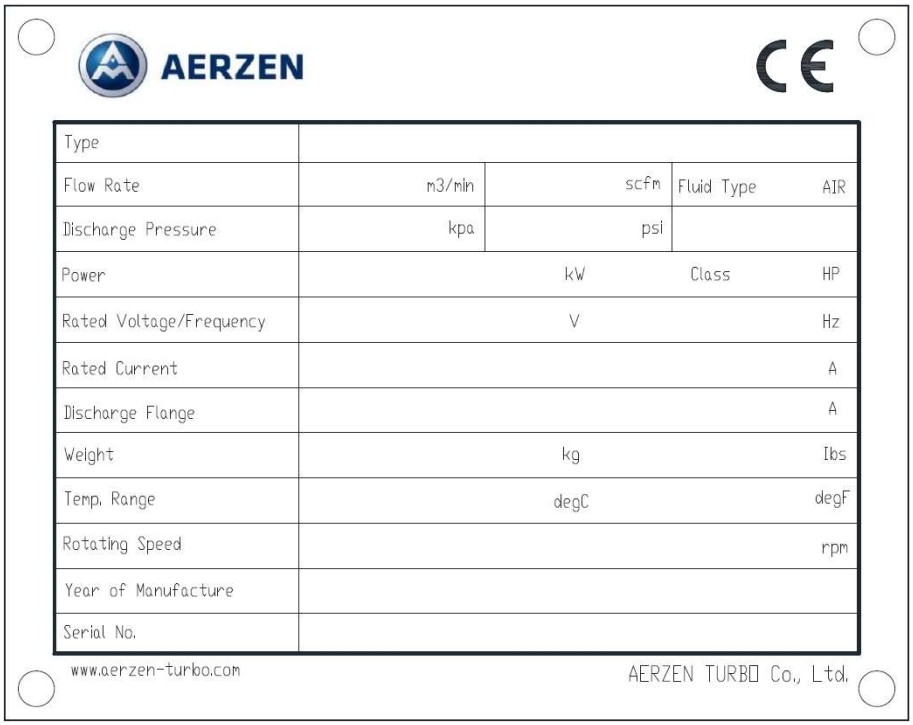

Fig. 1-1 Name plate

1.4 Overview

The components that are accessible from front and side panels are shown in following

figures.

Remark: refer to Table 1-2 for information about safety label ②, ③, ④, ⑤, and ⑥

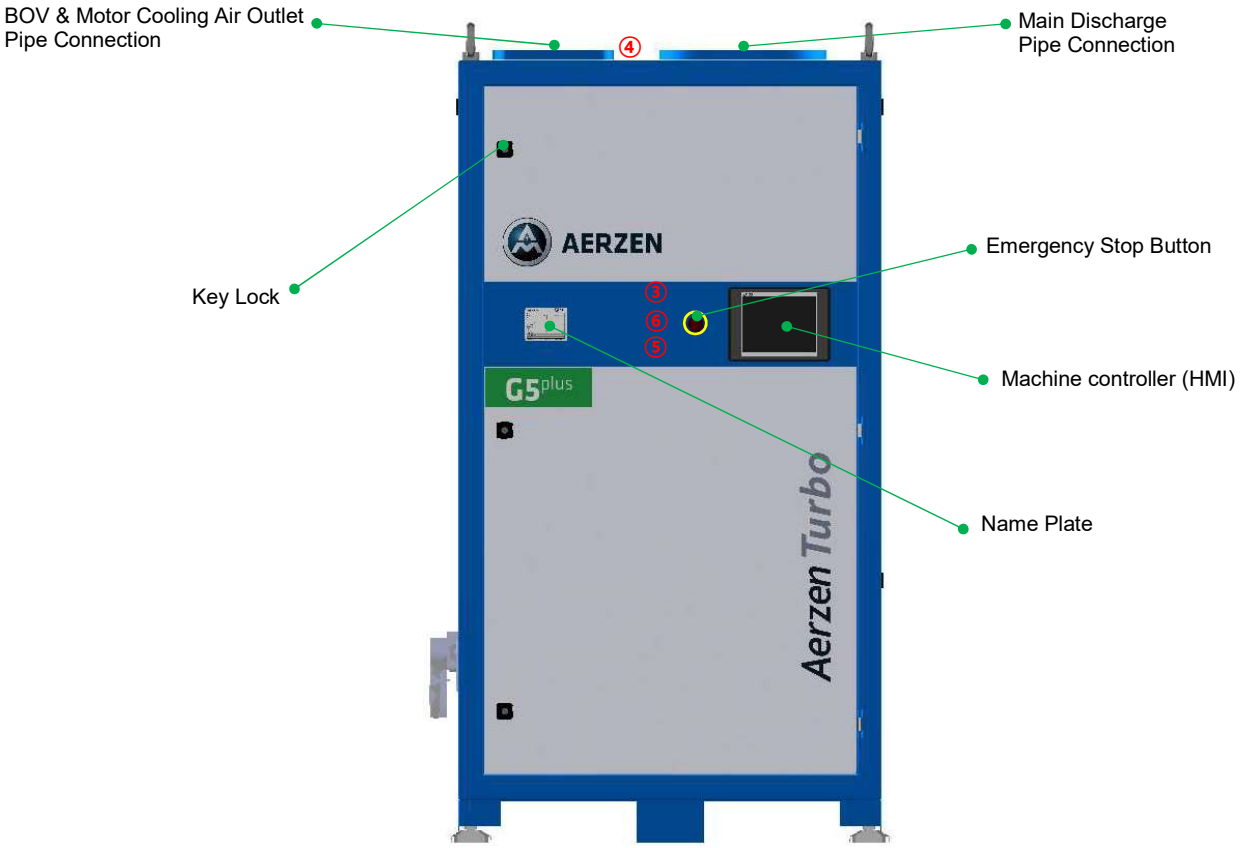

Fig. 1-2 Front-side view

©2020 Aerzen Turbo Co., Ltd.

Fig. 1-3 Right-side view

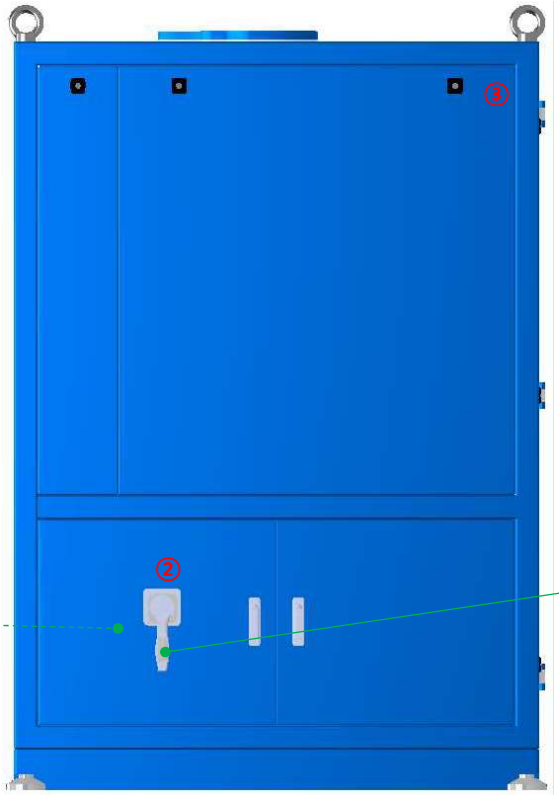

Fig. 1-4 Left-side view

©2020 Aerzen Turbo Co., Ltd.

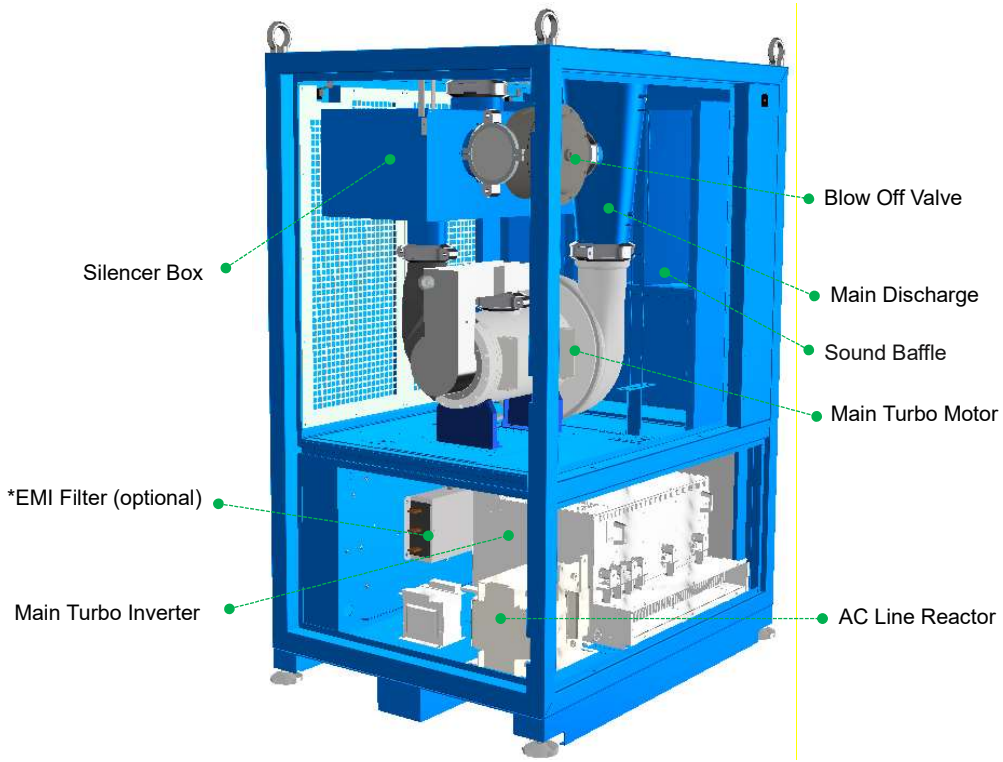

Fig. 1-5 Transparent view

* EMI filter is an option (only US, KS, and JS)

1.5 Technical description of the machine

1.5.1 Impeller

The impeller is a rotating component which transfers energy from motor to air. The impeller of Aerzen turbo blowers directly driven by a motor is made from SUS630 (17-4PH) stainless steel by precision die-casting using the lost-wax method under strict AERZEN quality management and draws improved aerodynamics, nearly free of wear and corrosion resistant. The impeller blades which determine incredible high efficiency of Aerzen turbo blowers are designed through 3D computational fluid dynamics numeric analysis by AERZEN technology.

1.5.2 Air foil bearing

The hydrodynamic force produces the pressure gradient around the motor shaft so that the air foil bearing requires no mechanical contact between the shaft and journal bearing. Therefore, Aerzen turbo air foil bearings establish 100% oil-free lubrication system and 100% free of maintenance. Theoretical service life of the air foil bearings are longer than 80,000 operating hours independent of start/stop cycles. (> 80 starts/stops per hour)
In addition the Aerzen air-foil bearing design offers also the possibility of idle mode operation.
Remark: Start/Stop cycles will be logged by the blower's internal control

©2020 Aerzen Turbo Co., Ltd.

1.5.3 Variable frequency drive

The variable frequency drive (VFD) drives the motor to adjust impeller rotational speed, which in turn controls the flow rate and/or the discharge pressure. The VFD as commonly known as “inverter” consists of two power stages and a VFD controller. In comparison with conventional blowers having fixed frequency drive system, VFD-based Aerzen turbo blowers show better energy saving, reliability and starting features, which are directly attributed to new Aerzen turbo inverter technology. Aerzen turbo *multi-level inverter* (inverter generation 5, 75HP IG5 to 400HP IG5) effectively suppress inverter output harmonics affecting motor temperature even without a bulk motor choke. Aerzen Turbo’s blower-optimized current control algorithm guarantees high reliability and performance.

1.5.4 Permanent magnet synchronous motor

The permanent magnet synchronous motor (PMSM) generates rotating power by electromagnetic interactions between stator coils and permanent magnet rotor. Aerzen Turbo PMSM exclusively designed for Aerzen Turbo blowers can start with less than 10% of rated current and reach up to speed of 67,000rpm quick with outstanding efficiency, almost constant even in partial load operation.

1.5.5 Blow off valve

The blow off valve (BOV) is a pressure relief device ensuring smooth drivability while blower is switching over from unload to load or vice versa. The BOV for Aerzen Turbo blowers is driven by aerodynamic principle so that it needs no auxiliary power consuming and complex control system.

1.5.6 Blower control system

The blower control system exclusively designed for Aerzen Turbo blowers provides integrated real-time transparency and display of all operation parameters including live-visualization of turbo performance range. The user-friendly blower control system supports universal interfaces, easy-access via HMI, and overall management of the machine.

1.5.7 Auto surge protection

Aerzen Turbo blowers are equipped with the auto surge protection (ASP) function which is outstanding anti-surge control algorithm based on high-performance CPU-based blower control system and high-speed constant current control. The turbo blower control system is continuously monitoring and calculating the distance between operating point of the machine and the surge limit line. Once the blower control system detects that the blower is expected to reach out to the surge, the ASP algorithm moves the blower operating point to avoid the surge.

1.5.8 LCD display (HMI; human machine interface)

The color LCD displays the following measurement data and alarms;

- Operating data
  - ✓ Air temperature at intake and discharge
  - ✓ Differential pressure across intake filter

©2020 Aerzen Turbo Co., Ltd.

- ✓ Discharge pressure
- ✓ Flow rate of air
- ✓ Rotating speed
- ✓ Run time

- Operation history log
- Fault summary and error codes
- Instance graphic view of each operating value in real time.
- Machine setup
- 29 languages

1.5.9 Sensors

- Intake/discharge temperature sensor
- Discharge pressure sensor
- Intake differential pressure sensor
- Motor temperature sensor
- Inverter current sensor
- Inverter temperature sensor

1.5.10 Auxiliary components

- Expansion joint assemblies
- Discharge check valves
- Stop valve

1.5.11 Option

- RFI (EMI) filter(only US, KS, and JS)
- Pre-Filter
- UPS
- Communication Converter

©2020 Aerzen Turbo Co., Ltd.

2 SAFETY

This section gives an overview of all important safety aspects relevant to protection of persons a nd to safe and trouble free operation. Noncompliance with the handling and safety instructions pr ovided in these instructions can lead to serious hazards.

2.1 Precautions – prior to and during operation

- Operator training – Operators must be trained and knowledgeable in all aspects of this blower package as stated herein and related operation and maintenance instructions (motor, accessories, etc.):
  - Protection – Guards, fan guards, electrical components, etc.
  - Operation – Blower limits (speed, pressure, temperature, etc.)
  - Monitoring devices – HMI, control panel, master control panel, transmitters, etc.
  - Motor operation & safety
- Safety regulations (in-house, local, national, etc.) must be adhered
- Safety appliances (sound enclosure panels, etc.) must not be removed while the blower is running. Do not remove any safety seals of removable panels. This may void your warranty!
- Safety electrical circuits/devices (E-stop, etc.) must not be jumped out or rendered inoperable, while the blower is running
- Do NOT operate the unit if electrical connections, sound enclosure and/or other enclosure panels are defective, missing or opened
- Do NOT operate the unit with inlet accessories removed
- Do NOT operate the unit without expansion joint and check valve
- Sound enclosure doors and panels are to be in place while the blower is running and may only be opened/removed by authorized Aerzen technicians when the motor is turned off and locked out
- Ensure that main power has been turned off and locked out prior to doing any work on the unit
- Wear safety gloves when touching the blower surface while the machine is at operating temperatures. The unit could be hot enough to cause severe burns!
- Wear ear protection while the blower is in operation!
- If assistance is needed contact Aerzen service department

CAUTION!

When using cleaning agents and sprays, poisoning may result in hazard.
Read the products MSDS (Material Safety Data Sheet) for proper treatment from inhalation, ingestion, eye and skin exposure.

2.2 General safety instructions

- Read and understand the operation and maintenance instructions and all other safety instructions before using this equipment
- Do NOT modify components or structures without authorization from Aerzen
- Turbo blower may be remotely operated. Perform all maintenance while in "Service" mode

WARNING!

Abnormal operation may cause serious injury or financial losses.
Consult with Aerzen technician for support and assistance.

- Do NOT place foreign objects or substances into the blower package
- Do NOT place foreign objects or substances near the blower package or suction piping and housing where they may be pulled into the blower suction

WARNING!

Foreign objects and substances sucked into the high-speed impeller may cause serious damage or injury.
Do not change or modify intake filters during operation.

- Do NOT exceed maximum nameplate pressure rating of the blower
- Do NOT close the main suction or discharge valve during operation
  - ➢ Unexpected closure of these valves may result in surge
- Do NOT perform any maintenance during blower operation
- Electric current inside the main and cooling turbo inverters is still energized for approximately 20 – 30 minutes after the blower is completely shut down

CAUTION!

Do NOT attempt to access any blower panels, including filters, for minimum of 20 minutes after complete shutdown.

- **Electric power at the incoming panel is energized regardless of the status of the main circuit breaker in the blower package**

WARNING!

Risk of electric shock is present even with the main circuit breaker in the off position.

- Do NOT add unauthorized circuits to the control panel
  - ➢ Please contact Aerzen for support and assistance
- All grounding should be completed in accordance with international electric standards
  - ➢ Use the special type 3 grounding method (Ground impedance: below 10Ω

©2020 Aerzen Turbo Co., Ltd.

for 460V class)

- Working on or disassembling the inverter is dangerous
  - ➢ Please contact Aerzen for support and assistance
- The blower package does NOT meet standards for explosion proof equipment. Do install or operate the blower in a classified area
- Wear protective hearing equipment while working around the blowers

CAUTION!

The required personal protective equipment below must be worn during any tasks in hazardous area

SAFETY WEAR

FOOT PROTECTION

EAR PROTECTION

HAND PROTECTION

EAR POTECTION

HARD HELMET

- When lifting the blower package with a crane or monorail, make certain to connect to all four lifting eyebolts
  - ➢ Use certified lifting devices and equipment

2.3 Safety devices

2.3.1 Main circuit breaker

Turning the main circuit breaker to position “0/OFF” immediately cuts the power supply to the VFD and the control circuit. This does not necessarily trigger the EMERGENCY STOP. The main circuit breaker disconnects the machine from the building-side power supply. In the event of overheating due to short-circuiting, the main circuit breaker automatically disconnects the machine from the building-side power supply. Decoupling the mains connection by turning off the machine circuit breaker allows the incoming panel to be taken off for maintenance purposes. When doing so, the main circuit breaker remains in the “OFF” position. The main circuit breaker must NOT be energized until after completion of the maintenance work. Even though the main circuit breaker is in the “OFF” position, the input power cables and connection busbar of the machine circuit breaker are still energized!

©2020 Aerzen Turbo Co., Ltd.

	DANGER!
	An unregulated restart can lead to serious of fatal injuries. Before restarting, ensure that there are no potential hazards to safety of any persons and that all safety devices are installed and functioning correctly.

2.3.2 Lock-out / Tag-out

Lock-out and tag-out of the main MCCB shall be performed whenever a maintenance or service is performed over the blower. This must be done by on-site operator or Aerzen service technician who have received proper training. The machine locked and tagged out must not be attempted to start or energize. When the task/job is complete, and the blower is ready for normal operation, check the machine to ensure that no one is exposed to the hazard and all tools for the maintenance or service work are removed before removing the lock. Each lock-out / tag-out must be removed by the person who put it on.

Fig. 2-1 Main MCCB handle LOTO

	DANGER!
	Lock and tag out the main MCCB before maintenance work. Follow lock-out / tag-out procedures.

2.3.3 Emergency stop button

Pressing the emergency stop button shuts down the machine by immediately cutting the power supply to all drives. When the emergency stop button is pressed, it must be released by pulling it back out before restart is possible.

©2020 Aerzen Turbo Co., Ltd.

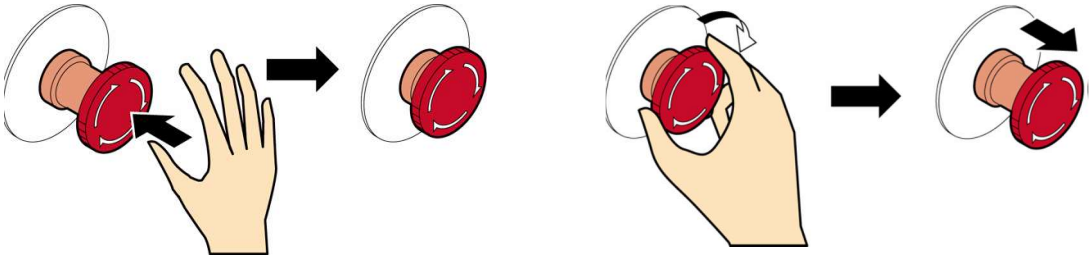

<Activating E-stop> <Releasing E-stop>

Fig. 2-2 Activating and resetting E-stop button

3 STORAGE

It is very important to store the equipment and the accessories in accordance with the proper instructions to prevent damage to equipment and materials prior to installation.

CAUTION!

Do NOT unpack the turbo blower package and turbo motor before start-up commissioning.

3.1 Storage up to 30 days

The blower packages and turbo motors are sealed in an air-tight plastic enclosure to protect the units from excessive dust and moisture. The equipment must not be stored outdoors. The seal must not be compromised.

3.2 Storage longer than 30 days

The blowers are sealed in shrink wrap to protect the units from excessive dust and moisture. The equipment must not be stored outdoors. The seal must not be compromised, and the equipment must be stored in a dry environment with temperature ranging between 4.5°C and 38°C (40°F and 100°F) and humidity less than 50% RH with Non-condensing.

Improper product storage may affect warranty durations. Please consult with your local Aerzen representatives, if you have any special circumstances.

©2020 Aerzen Turbo Co., Ltd.

4 INSTALLATION

4.1 Inspection of the blower components

The blowers and the blower enclosures are shipped completely assembled, except the clamp (home joint) between the scroll and the diffusor cone that has to be checked and fastened after connecting the blower to the customer piping system, to make sure that there are no loads on the blower. Components external to the blower enclosure (valves, expansion joint, silencers, etc.) are shipped loose for installation by the contractor.
To block and protect the impeller and the air foil bearing while transporting, the transport safety shims are inserted into the gap between the impeller and the scroll as show in Fig. 4-1. Every main and cooling air inlet and outlet of the main motor assembly is sealed in shrink wrap to protect the motor assembly from dust and moisture. A Silica Gel packet is provided to each main air inlet for better dehumidifying. The seal, the transport safety shims and the Silica Gel packets must not be compromised before start-up commissioning.

	CAUTION!
	Remove the seal, the transport safety shims, and the Silica Gel packets before starting the blower.

Fig. 4-1 Transport safety shims

Upon receiving a shipment, the owner should inspect all the components to ensure that no components are missing and that no components have been damaged during the shipping. If any components are missing or damaged, they should be noted in Table 4-1 in next page. Please include Table 4-1 along with a brief description of the damaged or missing component(s) and forward it to your local representative or contact Aerzen office.

©2020 Aerzen Turbo Co., Ltd.

Table 4-1 Delivery check list

Check Date:	
Model:	
Serial No.:	

Classification	Components	Missing	Damaged
Core components of the package	Motor/Core Assembly, Inverter, Controller, Casing		
	Intake Filter		
	Blow-Off Valve		
	Blow-Off Valve Silencer		
Aux. Elements	Flexible Connection (Suction and/or Discharge)		
	Discharge Silencer		
	Discharge Check Valve		
	Discharge Isolation Valve		
Options	RFI (EMI) Filter (only US, KS, and JS)		
	Pre-Filter		
	UPS		
	Communication Converter		

Note

©2020 Aerzen Turbo Co., Ltd.

4.2 Installation location

Selecting appropriate installation environment and equipment arrangement is important and will save both installation and maintenance costs. Equipment should be installed to provide safe and easy access for operation and maintenance personnel, and to ensure that the installation meets all national and local electrical and building codes.

The ideal location to install the blower is indoor where adequate lighting and space exist for operation and maintenance activities, in this atmosphere the blower package is not subjected to excessive climatic changes, corrosion, dust or moisture. If the blower is installed indoors but in a dusty environment, the intake filter will require more frequent cleanings and replacements. Excessive humidity, even in indoor operation, may also contribute to electrical and electronic component problems.
The blowers should not be installed in locations where the blower or the suction intake of the blower will be subjected to various pollution sources such as smokestacks, corrosive air, cooling towers, high temperature exhaust gases, steam, etc. If the blower is installed outdoors, a suitable means should be provided to protect the blower enclosure and the blower suction inlet from precipitation.
The blower package should be installed where adequate ventilation is available to provide an adequate fresh source of air for the blower intake and the blower cooling system. If the blowers should be installed indoor but in corrosive air ventilation, it's recommended to have proper room filtration of air. The suitable air composition according to IEC 60721-3-3 class 3C3 needs to be considered at any time. The heat rejection from the blower is estimated at 3% of total power consumption and should be accounted for in any room ventilation system. Suitable working space around the blower for operation and maintenance activities should be provided. The activities might include inspection, repair, assembly, and disassembly.

If the blowers are to be installed above grade or on a second floor of a building, appropriate access ways should be provided to get spare or replacement parts into the facility. The floor where the blower is installed on must be flat and on a horizontal plane. The surface should be able to accommodate all static loads. The blowers impart a dynamic vertical load equal to the area of the discharge pipe times the discharge pressure. – *This is critically important information when blowers are not on the ground floor*! – The blowers do not impart a lateral dynamic load. External vibration may not be transmitted to the blower. Vibration from other devices should be effectively isolated so they do not impact the blower equipment base. Anchors may be used to restrain blower movement due to external vibration or seismic activity.

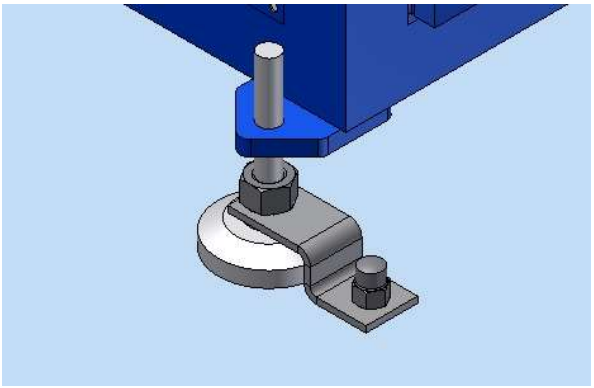

Fig. 4-2 Anchored installation

©2020 Aerzen Turbo Co., Ltd.

4.3 Operations and maintenance area

The operations area encompasses the front panel equipping the HMI and the emergency stop, and the left-side panel to reach the main circuit breaker and the control panel. The maintenance area covers spaces for replacing the filters and repair of main components such as the motor and the inverter. Figure 4-3 to 4-5 show recommended operations and maintenance area of Aerzen Turbo G5^{plus} blowers.

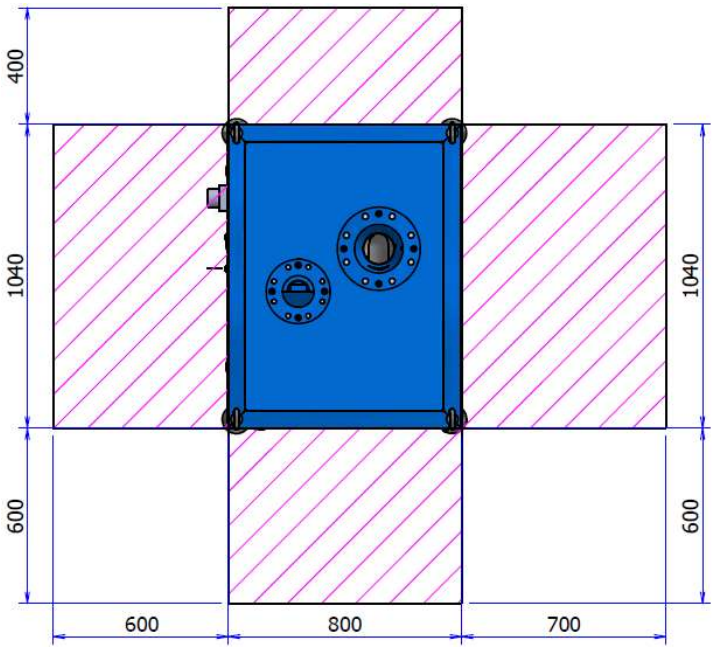

Fig. 4-3 AT25 and AT50 models

©2020 Aerzen Turbo Co., Ltd.

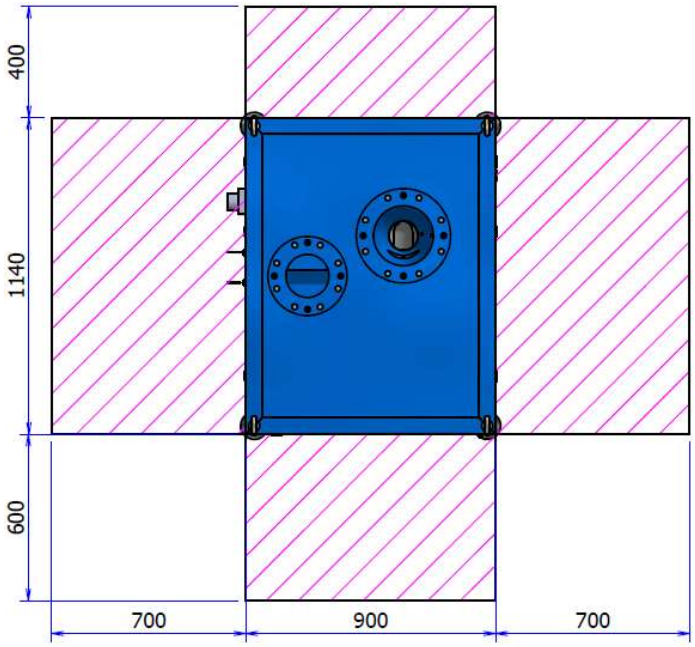

Fig. 4-4 AT75 and AT100 models

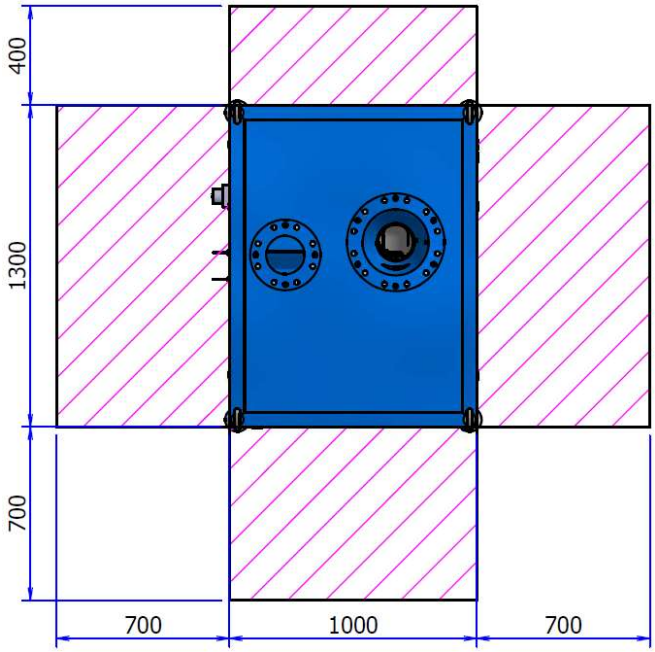

Fig. 4-5 AT150 and AT200 models

At least 5m (61.4ft) of overhead clearance space from ground will be required. But the overhead space is adjustable if the discharge piping system arranges to horizontal.

©2020 Aerzen Turbo Co., Ltd.

4.4 Preparation before installation

Before the installation, all the items listed in Table 4-2 should be checked.

Table 4-2 Check sheet for installation

Place:		Date of Check:	
Model:		Date of Delivery:	
CALSSIFICATION		**CHECK POINT**	**RESULTS**
Operating Condition	Pressure	Nominal operating pressure	
	Flow Rate	Nominal operating flow rate	
	Drawing	Preparation of drawings with respect to piping	
	Usage	Fitness for the process	
Place	Space	Enough space for inspection	
	Suitability	Environmental suitability for installation	
	Maintenance	Enough space for maintenance	
Electricity	Power	Security for stabilized power source	
	Transformer	Enough capacity for operation	
	Switching Board	Capacity of MCCB & power cable	
		Distance between MCCB and installation place	
Piping	Discharge	Status of discharge piping	
	Accessory	Status of check valve, expansion joint, silencer	
	Intake	Status of intake piping (if available)	
Etc.	Environmental Condition	Mechanical vibration level	
		Noise level	
		Amount of dust	
		Flatness of ground	
	CCR[1)] Operation	Remote/local operation	
		Application for MCP	
	Picture	Pictures at the installation place	
	Etc.	The other items	

Note

[1)] Central control room

©2020 Aerzen Turbo Co., Ltd.

4.5 Transport

The blowers should be transported or moved using following procedures.

Hand palette jack | Fork lift | Tuck crane

Fig. 4-6 Equipment for transport

a. Ensure that there are no obstacles around the installation location
b. Lift and move the blower from underneath using either a hand palette jack or a forklift
c. Take precautions to avoid mechanical shocks while moving the equipment

Fig. 4-7 Proper transportation by a forklift

	DANGER! Risk of fatal injury from toppling components.

If the blower is lifted and moved by a crane, certified lifting device rated for the equipment weight should be used. For using the eyebolts, there must be only tractive forces and no bending forces. The crane chain shall connect to the blower package using all four lifting eye bolts provided. Table 4-3 describes dimension and weight of Aerzen Turbo G5plus blowers.

©2020 Aerzen Turbo Co., Ltd.

Table 4-3 Dimension and weight

Model	Dimension [mm]	Weight [kg]
AT25 series	800 (W) x 1040 (D) x 1500 (H)	520
AT50 series	800 (W) x 1040 (D) x 1500 (H)	550
AT75/100 series	900 (W) x 1140 (D) x 1600 (H)	750
AT150/200 series	1000 (W) x 1300 (D) x 1850 (H)	870

DANGER!

Risk of fatal injury from toppling components.

A crane slab or crane beam can be used as shown in Fig. 4-8. The center of gravity should be taken account. Proper suitable guards to protect the blower from damage by lifting devices should be applied.

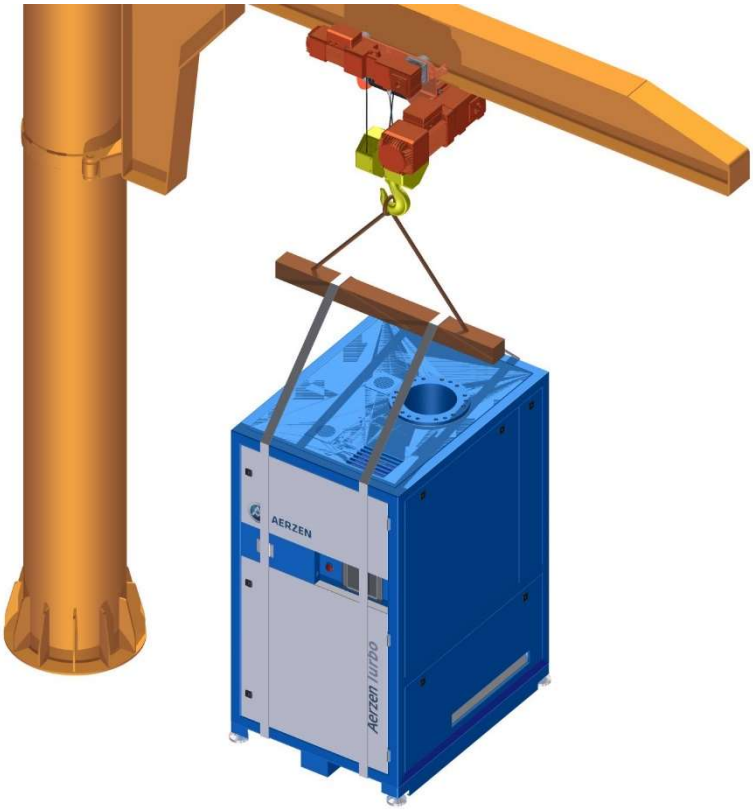

Fig. 4-8 Transport using a crane

©2020 Aerzen Turbo Co., Ltd.

4.6 Piping

Line up the centerline of the discharge piping with the centerline of the blower discharge on the enclosure as shown in Fig. 4-9. Verify that the height shown on the drawing agrees with the actual measured height at installation.

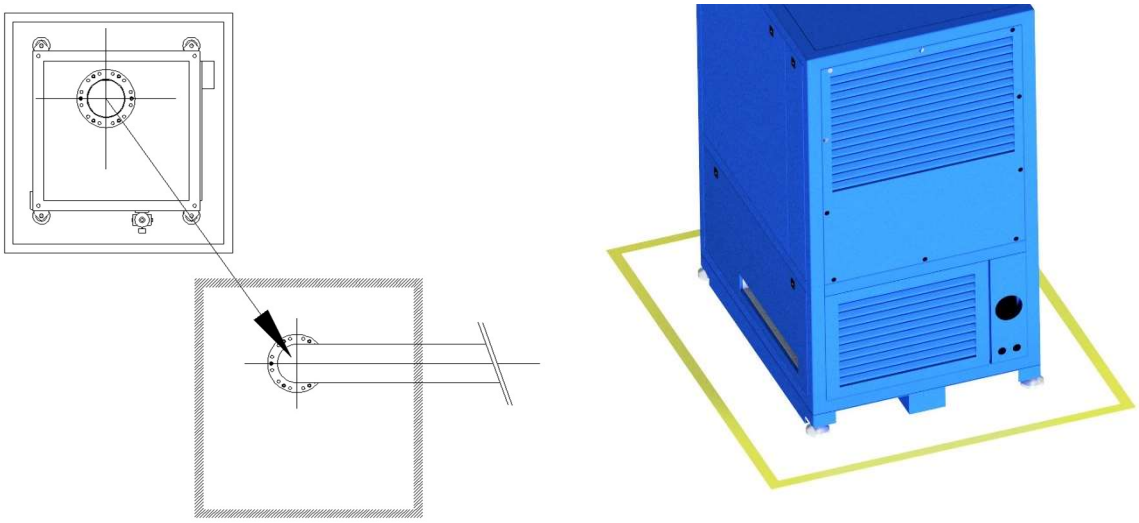

Fig. 4-9 Aligning the blower and marking the position

Rotate the blower about the discharge pipe center so as to get accurate position of the blower feet. Then adjust horizontal level by adjusting the leveling feet beneath the blower as shown in Figure 4-10.

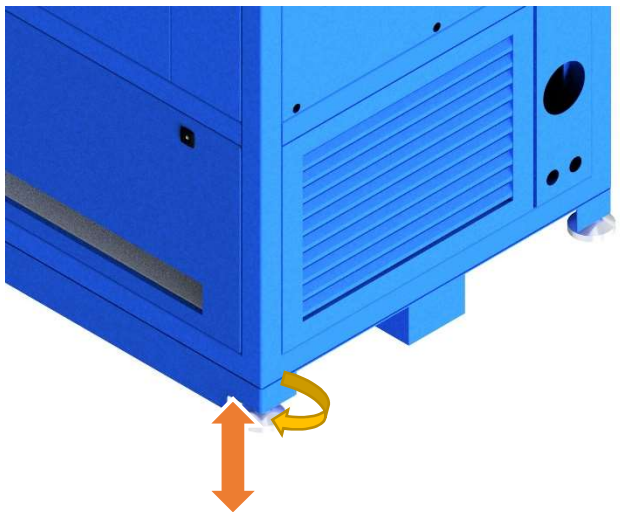

Fig. 4-10 Leveling foot

4.6.1 Discharge piping

Install discharge accessories in accordance with Fig. 4-11. Discharge components may include expansion joint, check valve, silencer, and isolation valve. Verify gaskets are properly inserted at this time.

©2020 Aerzen Turbo Co., Ltd.

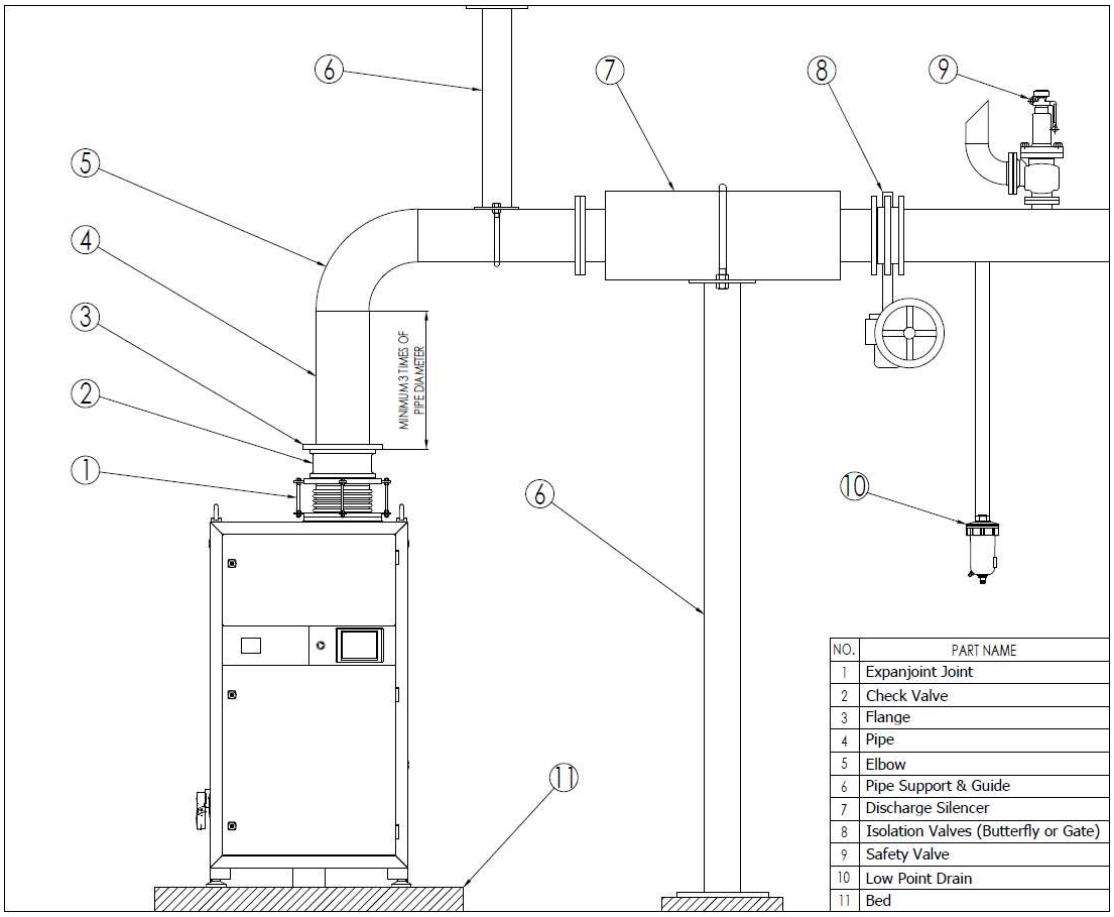

Fig. 4-11 Discharge piping example

Install the expansion joint directly to the blower discharge flange/adaptor. Support all piping and accessories independently from the blower. Any weight of piping and accessories should not be transmitted to the blower package. After piping work is finished, check gap between the scroll and the diffusing cone (3.5 to 5mm) and mount a clamp. Do NOT start the blower without this clamp (the clamp is not pre-installed)!

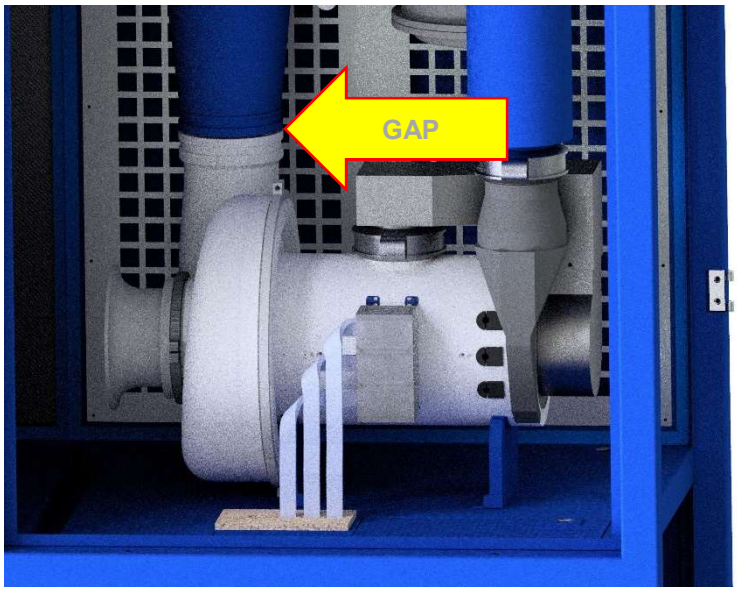

Fig. 4-12 Gap between scroll and diffuser cone

©2020 Aerzen Turbo Co., Ltd.

Locate the discharge silencer as close as possible to the blower discharge but maintain at least three straight pipe diameters between the blower expansion joint and the discharge silencer. Verify the flow direction is consistent with the check valve operation. The check valve should be installed upstream to the discharge silencer, between the silencer and the expansion joint.
Install the isolation valves (butterfly or gate valve) downstream to the discharge silencer.

Fig. 4-13 Isolation valve

©2020 Aerzen Turbo Co., Ltd.

4.6.2 Piping connection

4.6.2.1 Order on vertical arrangement

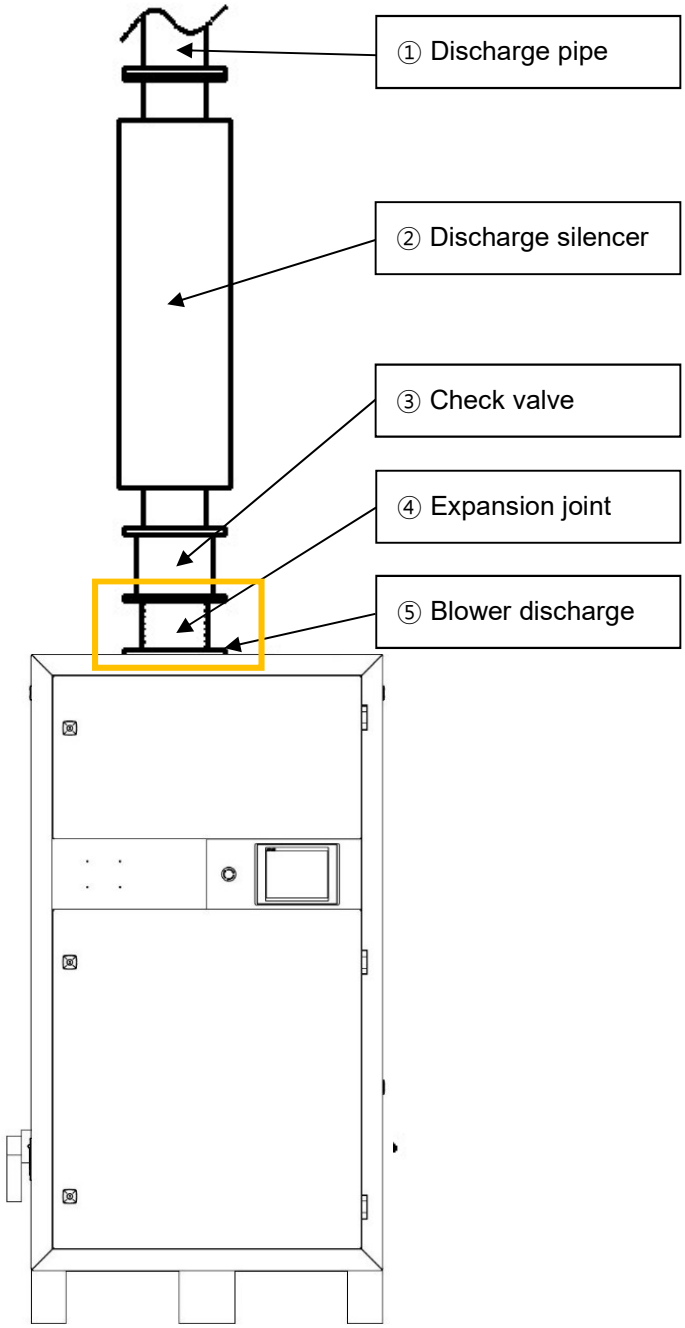

1) Connect discharge silencer to customer piping system (① + ②)
2) Connect silencer and check valve (① + ② + ③)
Remark: a check valve should be installed with a downstream straight length of pipe equal to three times pipe diameter and the hinge pin either vertical for horizontal runs or parallel to the downstream horizontal run for vertical runs
3) Connect check valve and expansion joint (① + ② + ③ + ④)
Remark: if expansion joint has a liner, please orient in proper direction with open side up
4) Connect expansion joint to turbo blower discharge end
5) Make sure overall connections order is ① Customer piping system ⇨ ② Discharge silencer ⇨ ③ Check valve ⇨ ④ Expansion joint ⇨ ⑤Blower discharge end

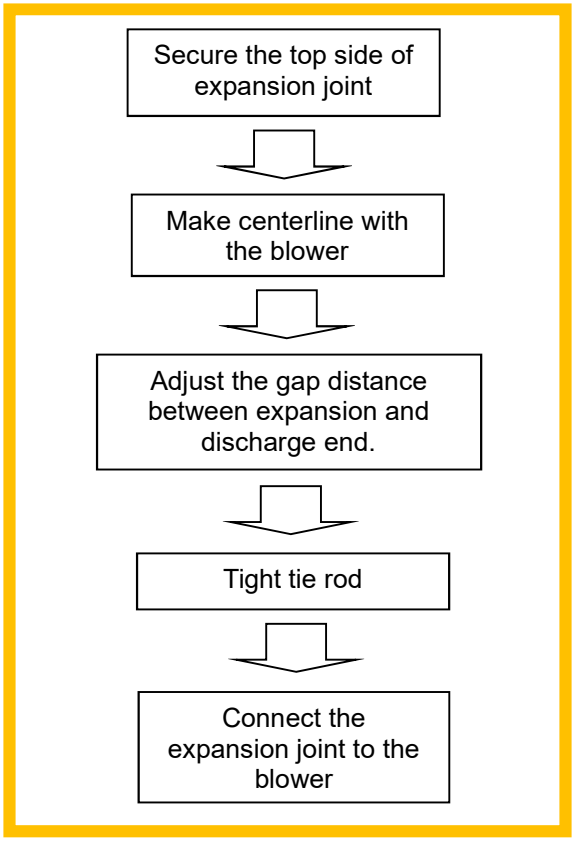

Fig. 4-14 Configuration of vertical arrangement

©2020 Aerzen Turbo Co., Ltd.

	CAUTION! Make sure the piping support system is properly installed. Every discharge piping materials' weight are free from the top side of the blower package including the discharge expansion joint.

	CAUTION! If you have a more than 12psi (1bar) machine, please do NOT forget to install the anchoring device.

4.6.2.2 Expansion joint assembly

To prevent over expansion, please put the tie rod every 120 degrees on the expansion joint and tight it with double 6mm nuts.

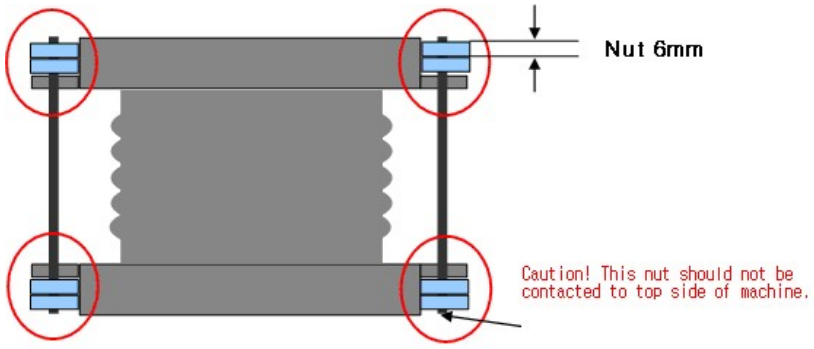

Fig. 4-15 Expansion joint assembly

- ✓ Make sure top side of expansion joint is firmly connected with discharge check valve and its centerline is aligned with blower discharge end center
- ✓ Gap between bottom of expansion joint and top discharge end of the blower is adjustable with the tie rod
- ✓ Adjust this gap within maximum 1mm on every direction between bottom of expansion joint and gasket placed on blower discharge end
- ✓ Adjustment is made by loosening tie rod nuts on expansion joint or adjusting blower level feet
- ✓ After adjusting gap properly, tight tie rod wing nut and put it on double nut to prevent loosening securing nut
- ✓ Put on marking point on nuts to line marking its status
- ✓ Connect bottom side of expansion joint to blower discharge end

NOTICE!

The bottom nuts should NOT be contacted to top side of the machine.

©2020 Aerzen Turbo Co., Ltd.

4.6.2.3 Order on horizontal arrangement

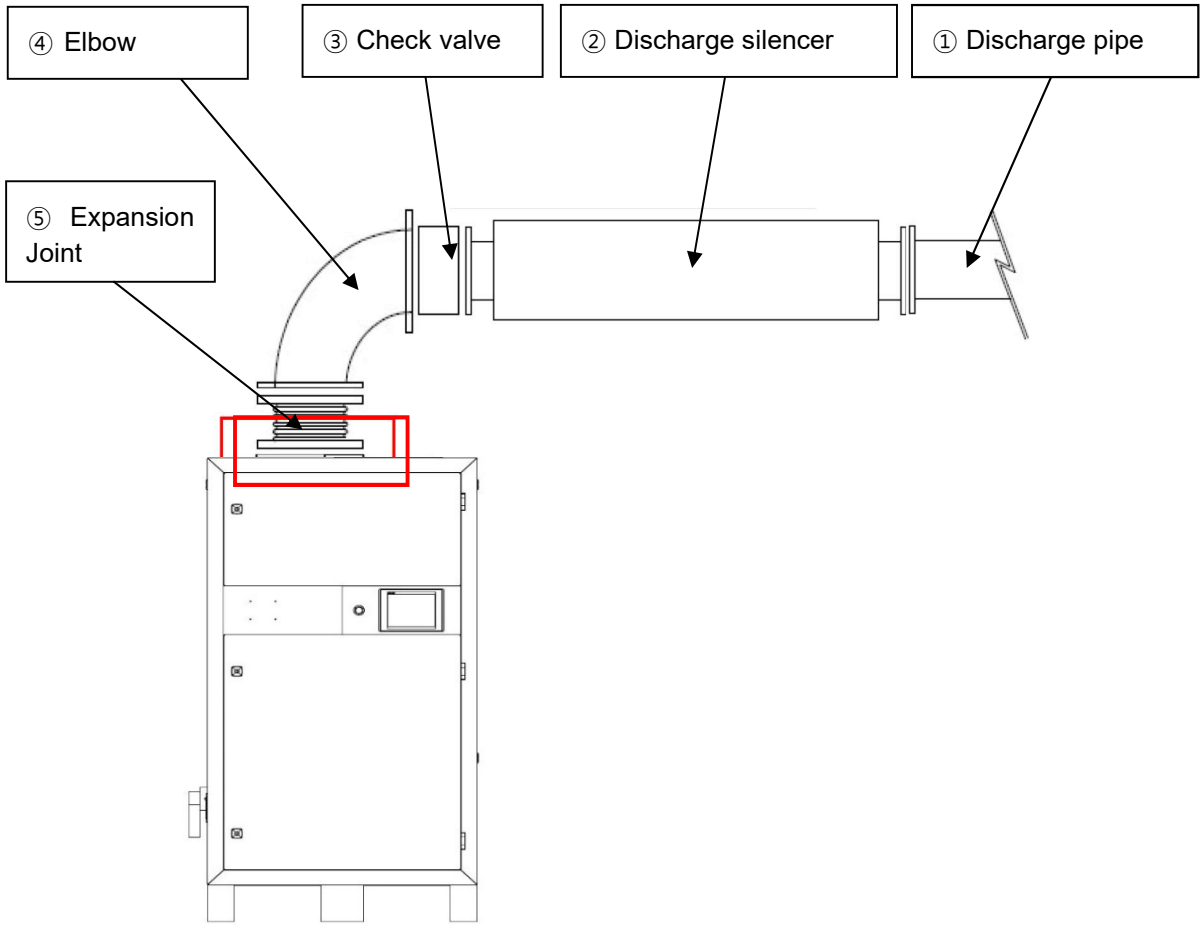

Fig. 4-16 Configuration of horizontal arrangement

1) Connect discharge silencer to customer piping system (① + ②)
2) Connect check valve to discharge silencer (① + ② + ③)
3) Connect elbow to check valve (① + ② + ③ + ④)
4) Join expansion joint to elbow (① + ② + ③ + ④ + ⑤)
5) Connect expansion joint to turbo blower discharge end
   Remark: refer to instruction for expansion joint assembly in previous articles
6) Make sure overall connections order is ① Discharge pipe ⇨ ② Discharge silencer ⇨ ③ Check valve ⇨ ④ Elbow ⇨ ⑤ Expansion joint ⇨ ⑥ Blower discharge end

©2020 Aerzen Turbo Co., Ltd.

	CAUTION!
	Make sure the piping support system is properly installed. Every discharge piping materials' weight have to be carried by client and not put on the top side of the blower package.

	CAUTION!
	If you have a more than 12psi (1bar) machine, please do not forget to install the anchoring device.

	CAUTION!
	The arrow mark on the surface of discharge check valve should be checked. Its shaft should be located to the top side.

4.7 Intake system

Verify that the air intake filters are attached to the intake panel of unit.

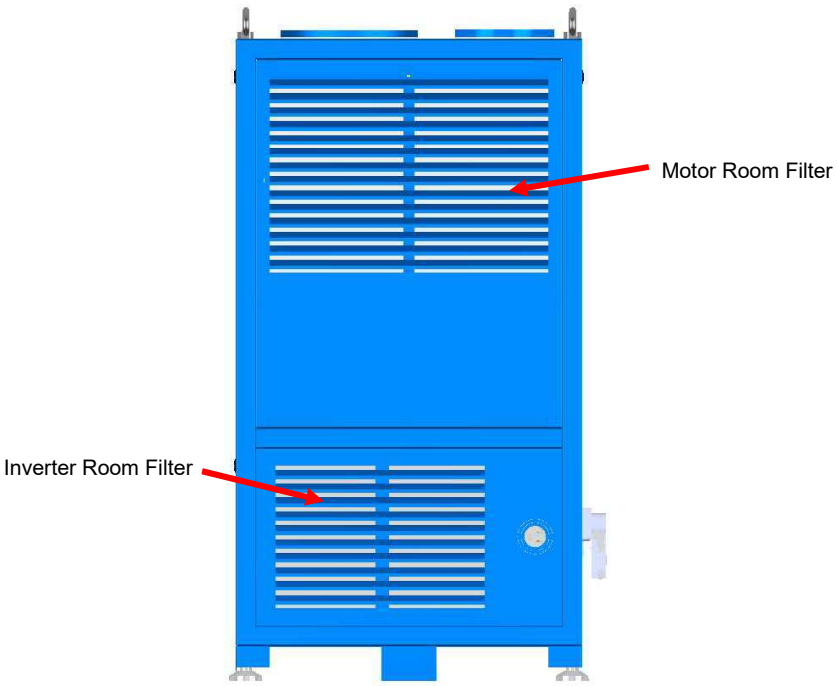

Fig. 4-17 Main and inverter side filter assembly

©2020 Aerzen Turbo Co., Ltd.

If alternate intake piping and filters are used, the filtering system should be designed to remove 98% of 4μm particles. **The differential pressure through the filter should never exceed 2kPa (0.3psi)**.

4.8 Pre-filter(optional)

The pre-filter provides an additional filter function to avoid a reducing lifetime of the medium filter from a dirty environments as an optional item. The pre-filter consists of the pre-filter frame and filter medium, and can be additionally installed on the package. Should be replaced the filter medium regularly at lease with 6 months.

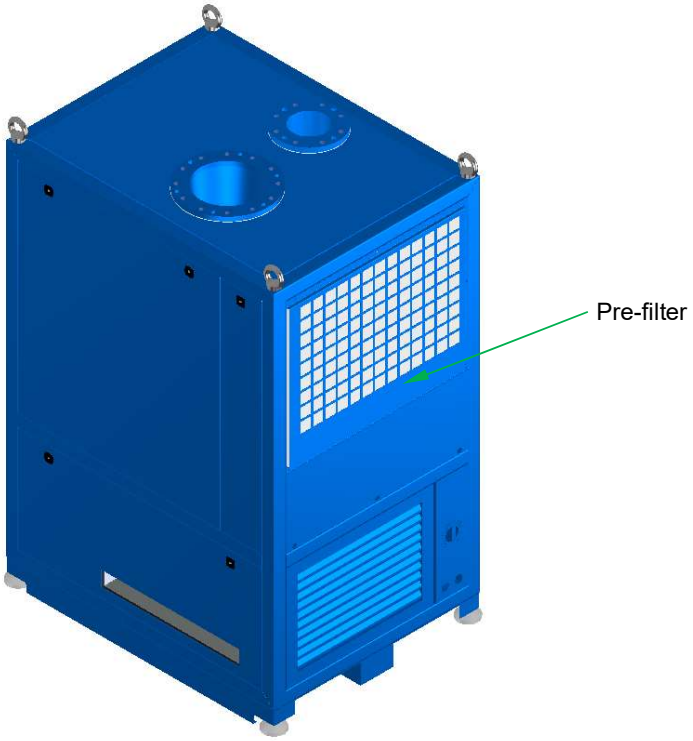

Fig. 4-18 Pre-filter (optional)

©2020 Aerzen Turbo Co., Ltd.

4.9 Ducted inlet configuration

For some special environment requiring special care of intake air, the ducted inlet model can be applied as show in Fig. 4-19.

Make sure the inlet pipe is properly installed and any stresses and loads are not transmitted to the blower package. Some proper measures which can fully support all the vertical load of the inlet pipe should be considered.

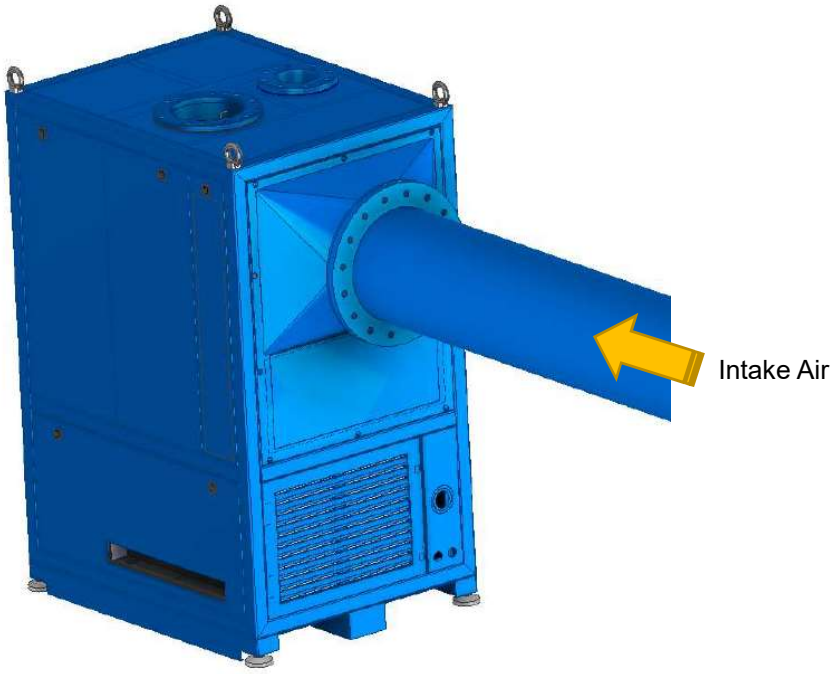

Fig. 4-19 Ducted inlet configuration

4.10 Other precautions

4.10.1 Pneumatic conveying applications

- Install a pressure relief valve to discharge piping
- Consider installing a surge tank if pressure fluctuations are high
- Construct pipelines with smooth curves for good particle transport

©2020 Aerzen Turbo Co., Ltd.

4.10.2 Connecting and operation in parallel with Positive Displacement blowers

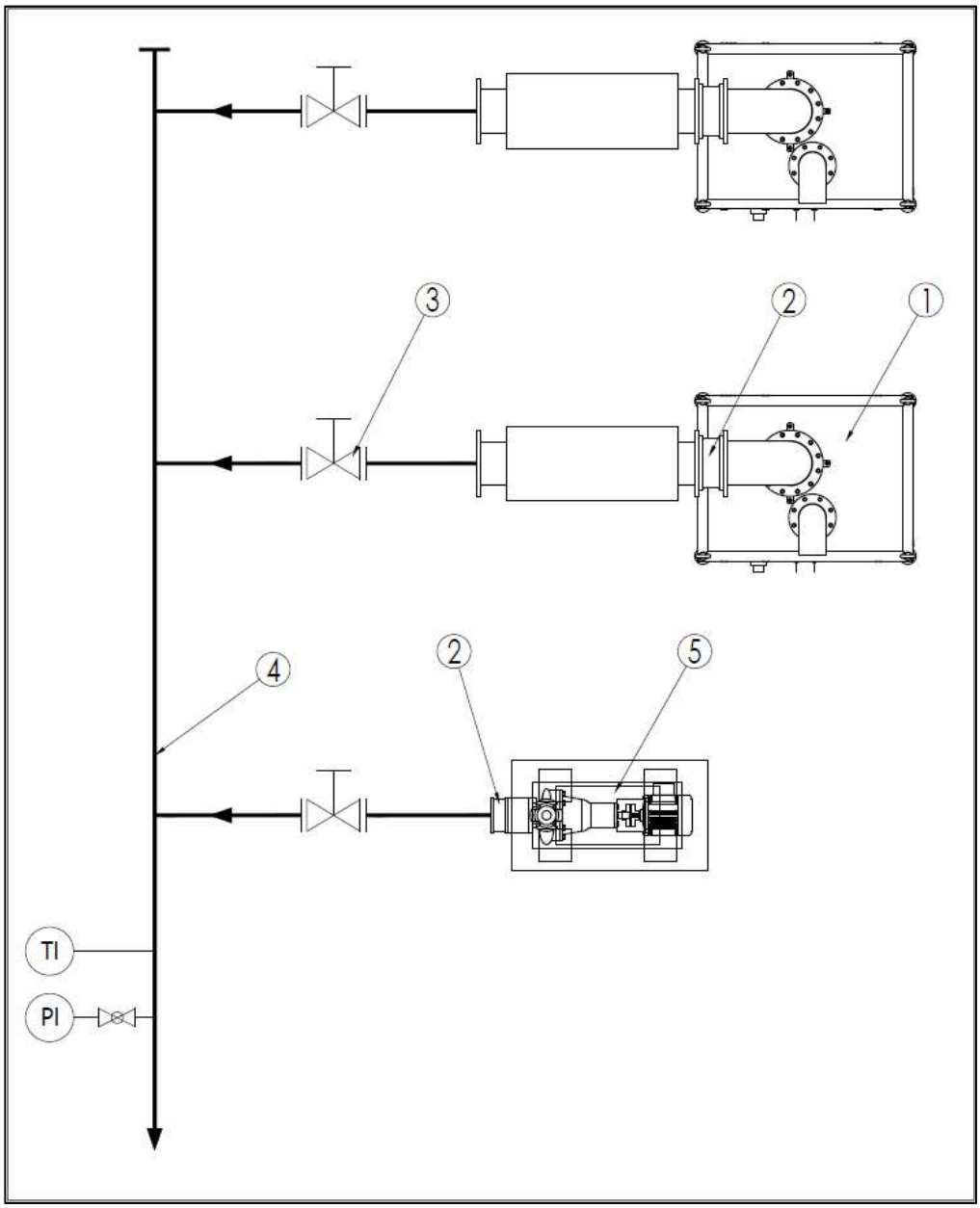

Parallel operation diagram

① Machine (turbo blower)

② Check valve

③ Shut-off valve

④ Collective line

⑤ Machine (positive displacement blower)

Fig. 4-20 Recommended parallel connection with Positive Displacement blower

©2020 Aerzen Turbo Co., Ltd.

4.10.3 Additional pressure losses

Table 4-4 Maximum allowable additional pressure losses

Ducted Cooling Outlet	< 500Pa
Ducted BOV Outlet	< 1000Pa

4.11 Power cable and ground

Table 4-5 shows the specification for main power and ground cables. Cables should be connected as shown in Figure 4-21. Ensure power cables are connected with proper phase sequence of R/L1-S/L2-T/L3. Ground cable color should be green/yellow. These color cables should not be used for any other purpose. Use the special type 3 grounding method. (Ground impedance: below 10Ω above 400V)

Table 4-5 Capacity for power and ground cables

Rated (HP)	kW	Input Voltage									
		380V		400V		440V		460V		480V	
		Amp(In)	MCCB	Amp(In)	MCCB	Amp(In)	MCCB	Amp(In)	MCCB	Amp(In)	MCCB
25	**21**	35	50A	33	50A	30	50A	29	40A	27	40A
50	**42**	69	100A	66	100A	60	100A	57	80A	55	80A
75	**63**	104	150A	99	150A	90	150A	86	150A	82	150A
100	**84**	138	200A	132	200A	120	200A	114	175A	110	175A
150	**126**	208	300A	197	300A	179	300A	172	300A	164	300A
200	**168**	277	400A	263	400A	239	400A	229	350A	219	350A

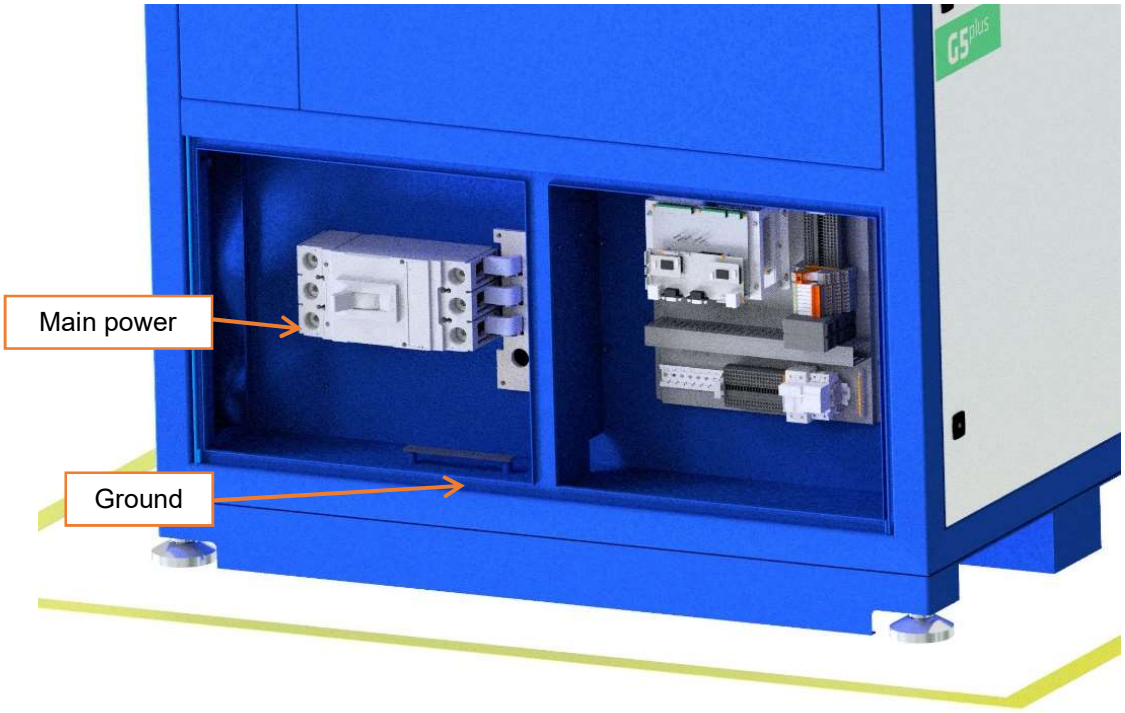

Fig. 4-21 Connection of main power and ground

©2020 Aerzen Turbo Co., Ltd.

4.12 Insulation resistance

If the blower is located in high humidity conditions, the insulation resistance should be measured. With 1000V between main power and ground the resistance should be above 2000MΩ.

4.13 Control wiring

Refer to the control diagram shown in Fig. 4-22 for I/O Terminal Block operation connections.

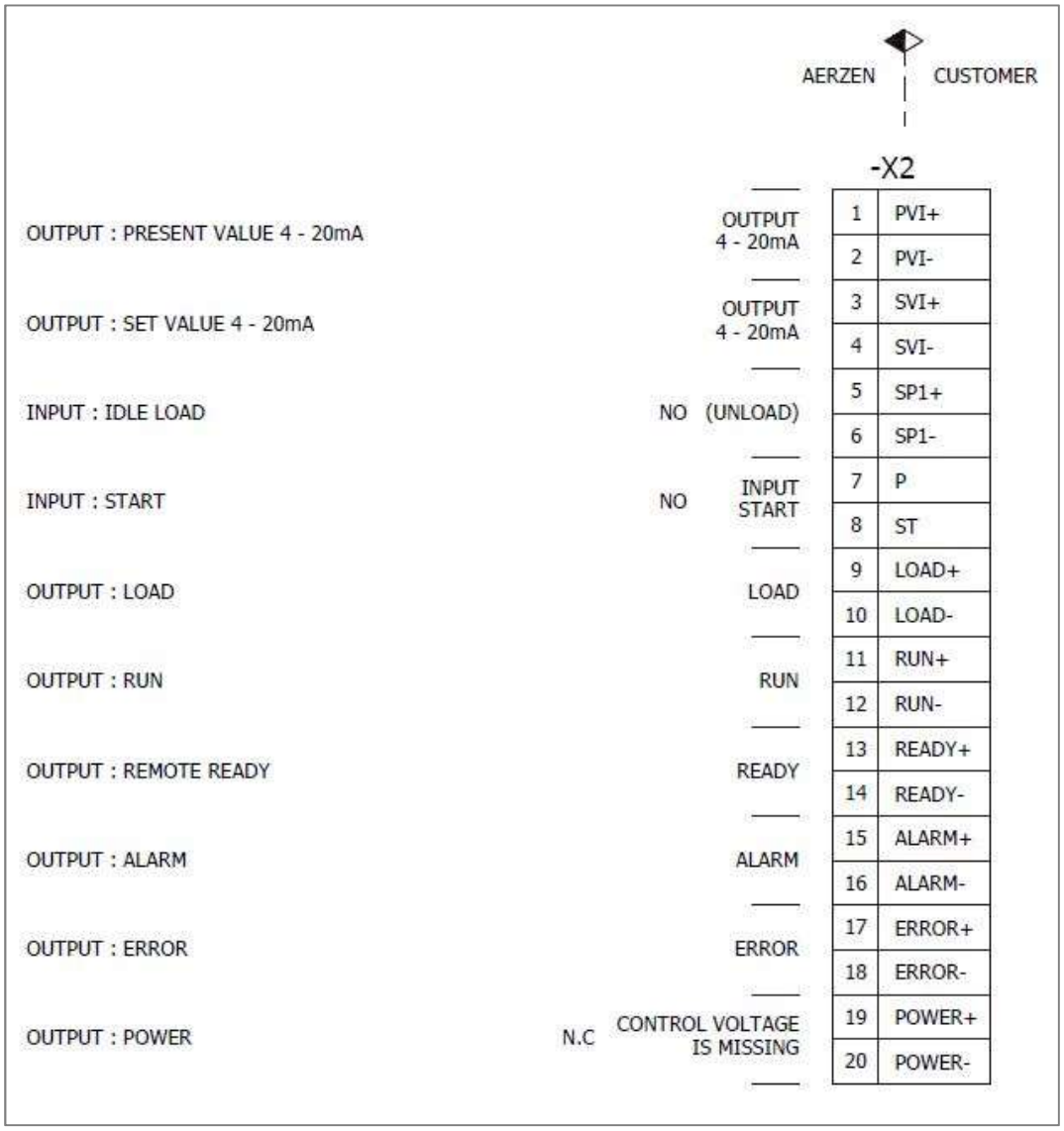

Fig. 4-22 Interface terminal block

4.14 Commissioning after installation

The commissioning of the turbo blowers should be only done by trained and authorized staff of the Aerzen Group. When commissioning of the turbo blower, an according commissioning report should be provided and recorded.

©2020 Aerzen Turbo Co., Ltd.

5 OPERATION

Aerzen Turbo blowers can be controlled by any of following methods:

- Local – using HMI (touch panel)
- I/O Terminal Block – using hard wiring to I/O Terminal Block
- Fieldbus – using communication

5.1 Local operation

5.1.1 HMI screen description

5.1.1.1 HMI main screen

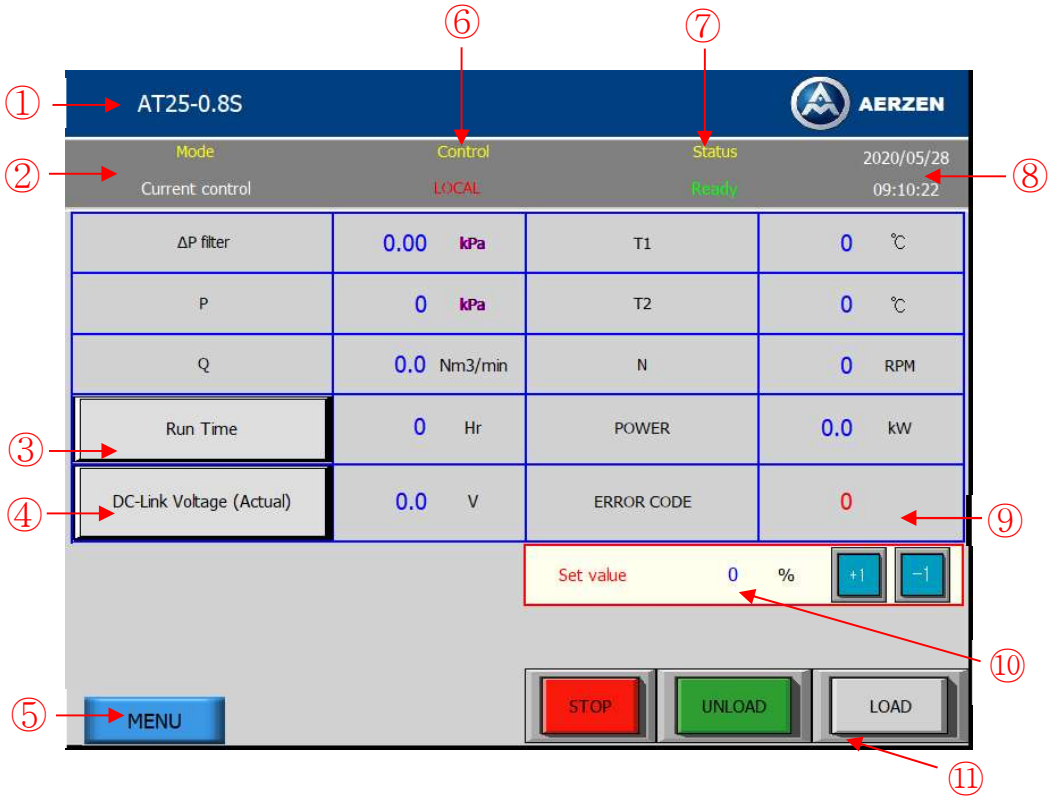

① Model	⑦ Operating status
② Operating mode	⑧ Date & time
③ Display parameter chosen by CP [55]	⑨ Error code
④ Display parameter chosen by CP [17]	⑩ Current SV (Set Value)
⑤ Sub menu access	⑪ Control buttons (Stop, Unload, Load)
⑥ Fieldbus / Local / I/O Terminal Block	-

Fig. 5-1 HMI screen display

©2020 Aerzen Turbo Co., Ltd.

Table 5-1 Details for the display screen

Item	Explanation	Item	Explanation
ΔP	Differential pressure across intake filter (kPa or psi)	T1	Intake air temperature (℃ or °F)
P	Discharge pressure (kPa or psi)	T2	Discharge air temperature (℃ or °F)
VOLUME FLOWRATE	Flow rate of air (m^3/min or cfm)	SPEED	Rotating speed of motor (RPM)
RUN TIME ON-OFF	Accumulated run time (hours)	INPUT POWER	Input power (kW)
DC-link	DC-link voltage (V)	ERROR CODE	Information for error code

Remark: INPUT POWER showed on HMI cannot replace the calibrated power meter having guaranteed accuracy. The result shall not be used for any other purposes except for as a reference for operational trend and status.

5.1.1.2 Operating mode

The operating mode should be set prior to initial startup. To access to the mode setup, tap “Mode” on HMI screen as marked in Fig 5-2.

Current control
In this operating mode, the electric current is maintained constant. This mode is primarily used for aeration process.

Volume flow control
In this operating mode, the electric current is adjusted to maintain a constant flow rate. This mode is primarily used for particle transport.

Pressure control
This operating mode is used to maintain constant blower pressure.

DO control
This operating mode is used to maintain constant dissolved oxygen.

©2020 Aerzen Turbo Co., Ltd.

Fig. 5-2 Mode setup

Press **0: Current control** to select current control mode and verify 'select: 0'.
Press **SAVE** and **Return** to go back to the home screen.

5.1.1.3 SV setup

Following units are used for SV by operating mode.

Table 5-2 Input units for SV

Mode	Input	Unit
Current Control	% of max. current	%
Volume Flow Control	Volume flow rate	m^3/min or cfm
Pressure Control	Discharge pressure	kPa or psi
DO Control	Dissolved oxygen	ppm

SV can be adjusted at any time by procedure below. Press **MENU** on the base screen to bring up the six green sub-menus.

Fig. 5-3 SV setup

Press **Setup** to go to Setup menu.

©2020 Aerzen Turbo Co., Ltd.

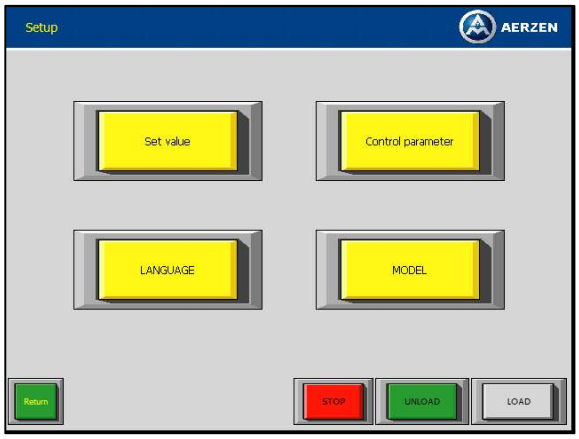

Fig. 5-4 Setup menu

Press **Set Value** to adjust SV.
cf. Pressing O marked area in next figure will get you the same result.

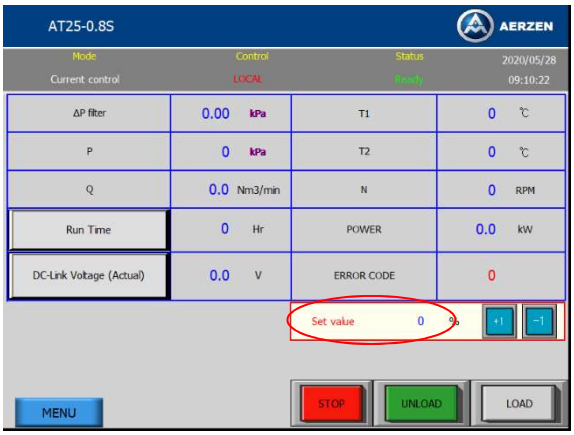

Fig. 5-5 Entering SV

Press O in following figure to open a virtual keypad.

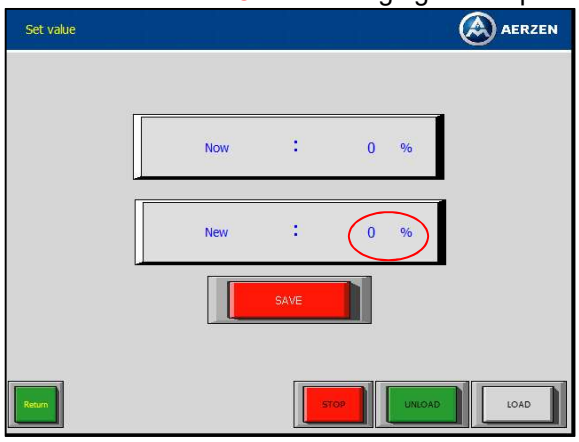

Fig. 5-6 New SV

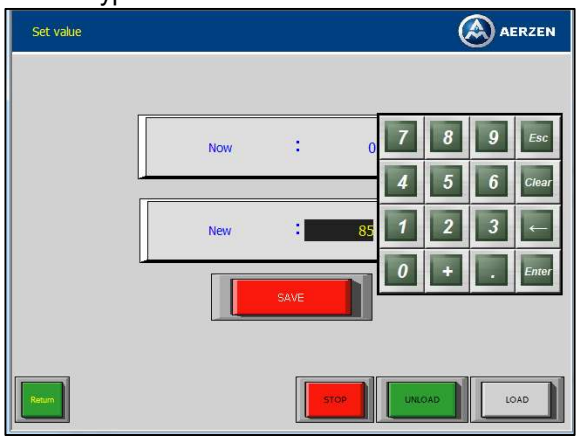

Fig. 5-7 Keypad

Enter a new SV using the numeric keypad.
Press **Enter**, **SAVE** and **Return** to go back to the home screen.

©2020 Aerzen Turbo Co., Ltd.

5.1.1.4 Control parameters (CPs)

Press **MENU** on the base screen to display the six green sub-menus.

Press **Setup** to go to setup menu.

	WARNING! Change of control parameters (CP) may cause serious damage to the machine. It should be done only under permission of trained personnel.

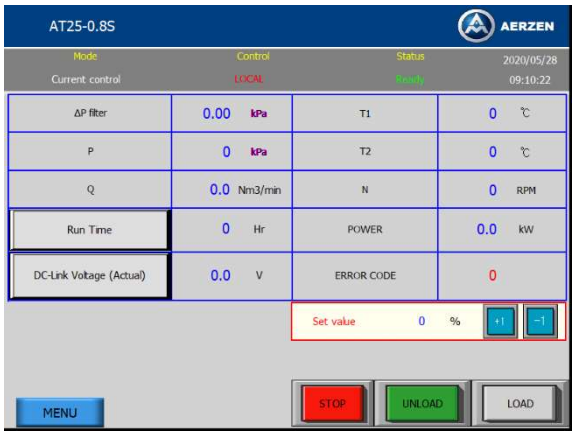

Fig. 5-8 Default HMI screen

Fig. 5-9 Menu popup

Press **Control parameter** to change control parameter.

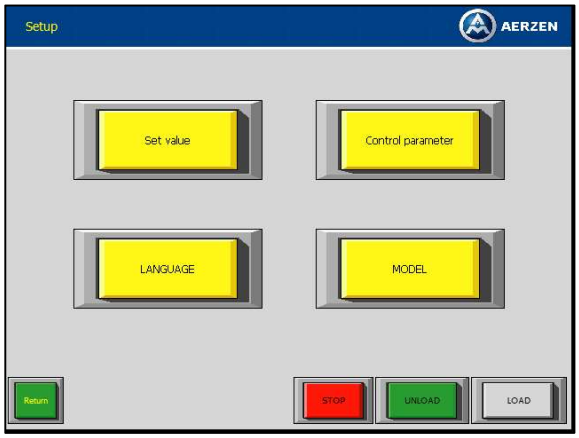

Fig. 5-10 Setup screen

Press a control parameter number to be changed as shown in following figure to open a setting window.

Fig. 5-11 CP setting popup

Enter new value using numeric keypad.
Press Enter, SAVE and Return to go back to the home screen.
Press to close the window.

5.1.1.5 Language

Choose your first language on Language menu. The language of all the displayed items will be automatically changed. Please contact the nearest Aerzen office if the machine doesn't show your language.

Fig. 5-12 Language selection screen

5.1.1.6 Model selection

	WARNING! No model change is allowed! This only impacts the performance graph viewed. A different model than actual should never be selected. This may result in machine failure due to setting an improper operating range.

©2020 Aerzen Turbo Co., Ltd.

Fig. 5-13 Setup menu

Press **MENU** on the base screen to bring up the six green sub-menus.
Press **Setup** to go to Setup menu.

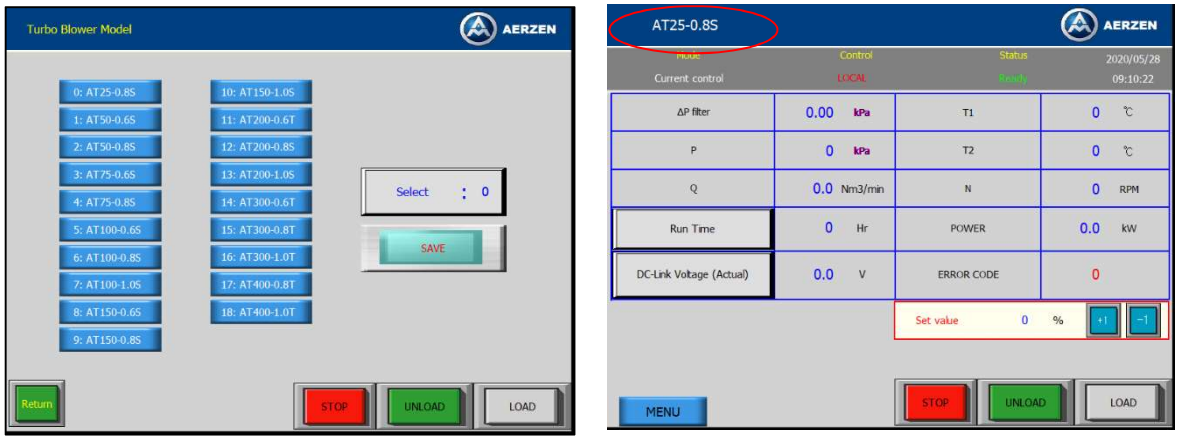

Fig. 5-14 Model selection

Press **MODEL** to select a proper model.
Press **Turbo blower model**.
Verify 'selected' value becomes **Select: n** and press **SAVE**.
You can see the selected model on the home screen.

5.1.1.7 Graph menu

Press **MENU** on the base screen to display the six green sub-menus.
Press **Graph** to show the operating point on the performance curve.

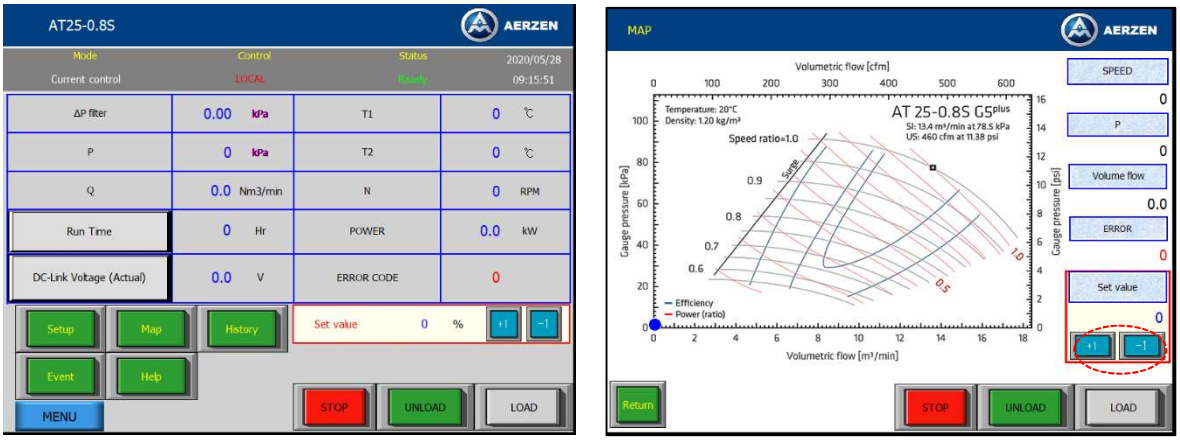

Fig. 5-15 Graph menu

Press +1 or -1 to change SV by incremental steps.
Press **Return** to go back to the home screen.

5.1.1.8 History #1 (1sec data)

Press **MENU** and **History** from the home screen to display History Data #1.
Data are logged once a second for the past 5 minutes and recorded in a non-volatile stack memory on the CPU board.

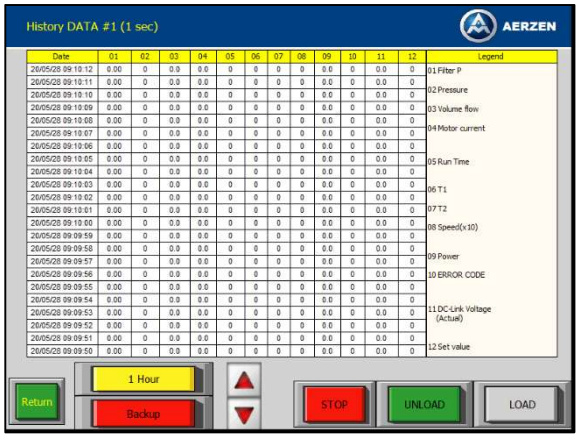

Fig. 5-16 1sec data

Press **Return** to go back to the home screen.
Backup key is used to download the log data into USB storage.
Remark: USB should be 2.0 for compatibility.

5.1.1.9 History #2 (1hour data)

Press **1 hour** on History DATA#1 screen to move to History Data #2 screen.
Data are logged once an hour for the past 31 days and recorded in the non-volatile memory.
Backup key is used to download the log data into USB storage.

©2020 Aerzen Turbo Co., Ltd.

Fig. 5-17 1hour data

Press **Return** to go back to the home screen.

5.1.1.10 Event log

The Event Log records every error's start time, clearing time, and code for the past 5000 errors. The log are recorded in the non-volatile memory.

Backup key is used to download the log data into USB storage.

Fig. 5-18 Event log screen

5.1.1.11 Control mode

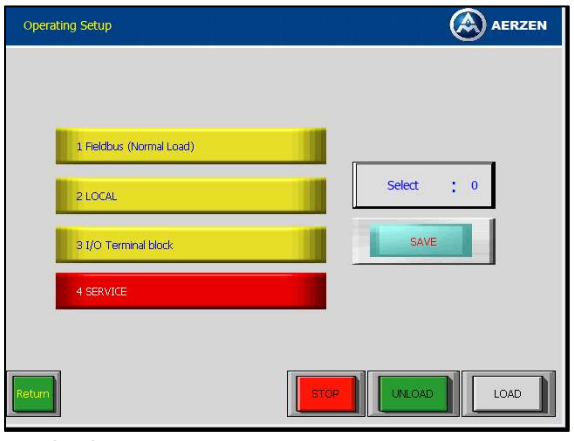

Fig. 5-19 Control method setup

Press O marked control mode indicator on the home screen to go to the operating setup screen.
Press **2 LOCAL** to change the current control mode to LOCAL.
Verify “select” value becomes **Select: 2** and press **SAVE**.
Press **Return** to go to the home screen.

“1: Fieldbus” control allows the unit to be controlled vis fieldbus communication “2: Local” allows the unit to be controlled locally via HMI “3: I/O Terminal Block” allows the unit to be controlled and monitored using dry contact relays with discrete connections “4: Service” allows the unit to be disconnected from all local and remote control commands so that the machine is keeping standstill and preventing unintended startup during service works

5.1.1.12 Control Parameter [17]

Press O marked button in next figure to display items related to Control Parameter [17].

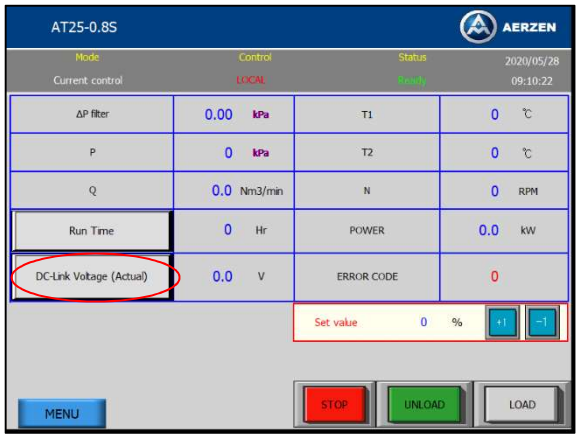

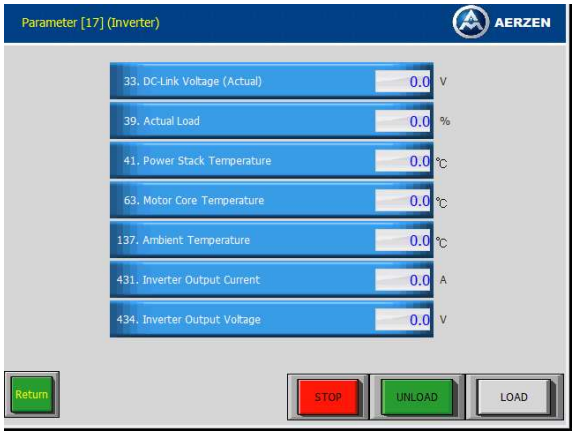

33: DC-link Voltage (Actual)
39: Actual Load
41: Power Stack Temperature
63: Motor Core Temperature
137: Ambient Temperature
431: Inverter Output Current
434: Inverter Output Voltage

Fig. 5-20 Control parameter [17]

5.1.1.13 Control Parameter [55]

Press O marked button in following figure to display items related to Control Parameter [55].

©2020 Aerzen Turbo Co., Ltd.

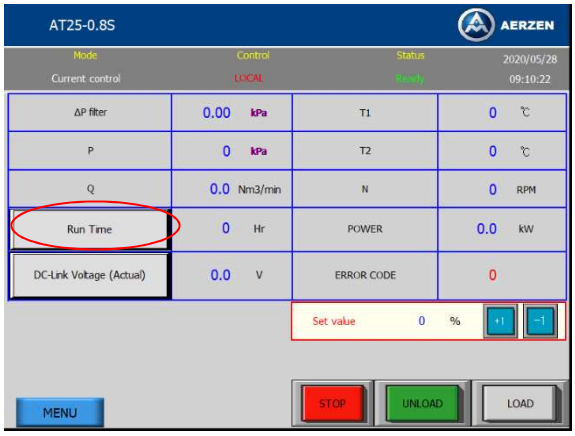

0: Run Time
1: Run Count
4: Fan Speed
11: Surge Range P2
12: Differential Pressure ΔP3(x1000)
13: Differential Pressure ΔP3
21: Mass Flow
31: Dissolved Oxygen
40. Normalized actual value

Fig. 5-21 Control parameter [55]

5.1.1.14 Help

The Help screen shows the contact information of AERZEN.
Press a flag and find the contact information.

Fig. 5-22 World map

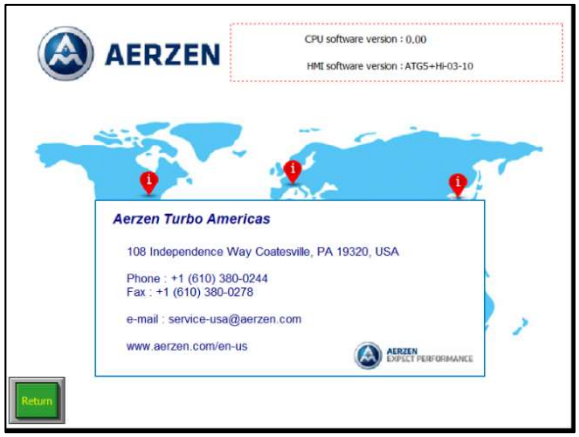

Fig. 5-23 Contacts of Aerzen Turbo Americas

Fig. 5-24 Contacts of Aerzen Turbo Europe

Fig. 5-25 Contacts of Aerzen Turbo Korea

©2020 Aerzen Turbo Co., Ltd.

5.1.2 Start and stop

Start procedure must follow steps below;

- If the status window shows "Ready", the system is ready for normal operation. If "Error" display appears, then remove the source of the error. After confirming condition of the machine, press "Stop/Reset" button to make the machine ready again
- After pressing "Run/Unload" button "Wait" will appear in the status until the machine is started and in idle operation
- Once the idle speed is reached, the machine should display "Unload" in the status window. If UNLOAD display appears, the system is ready for loading
- The blower will be unloading at 9,000 - 16,000 rpm. The air is exhausted to atmosphere through the blow off valve (BOV) outlet
- To change UNLOAD condition to LOAD condition, press “Load” button when in Local operating mode. (In Fieldbus or I/O Terminal Block operating mode the LOAD command should be sent from a plant control system)
- If One Step Loading is activated (CP [82] = 0), transition from unload to load is automatic
- At a pre-assigned SV, BOV will be closed
- After BOV closing, speed and power are increased to the SV (set value). During this time “Load” will appear in the status window
- See article 5.1 to modify SV

Stop procedure must follow steps below;

- If One Step Loading is not activated (CP [82] = 1), unload the blower first and then press “Stop/Reset” to shut down the blower
- If One Step Loading is activated (CP [82] = 0), press “Stop/Reset” to shut down the blower.

5.1.3 Emergency stop

In hazardous situations, the blower must be hardly stopped as quickly as possible by the emergency stop button and electric power supply must be shut off.

©2020 Aerzen Turbo Co., Ltd.

5.2 I/O Terminal Block operation

Aerzen Turbo Blowers can be operated remotely with relays and analog signals.

5.2.1 Signals

I/O Terminal Block control is achieved through terminal block (X2) located in the control Panel. Table 5-3 shows the inputs and outputs available on X2.

Table 5-3 Signals description

Signal	Contact (X2)	Comment
PV (Present Value)	1, 2	OUTPUT, present flow/current/rpm (4-20mA output)
SV (Set Value)	3, 4	INPUT, Set mode of operation (4-20mA input)
IDLE LOAD	5, 6	“ON” during Unload operation (2A)
START	7, 8	“ON” during Start operation (2A)
LOAD	9, 10	“ON” during load operation (2A)
RUN	11, 12	“ON” when RUN (2A)
READY	13, 14	“ON” when READY (2A)
ALARM	15, 16	“ON” when ALARM takes place (2A)
ERROR	17, 18	“ON” when ERROR takes place (2A)
POWER	19, 20	“ON” when control power is “ON” (2A)

5.2.1.1 Remote Ready

When the operating mode is set to ‘I/O Terminal Block’ via HMI and there are no error signals of the blower, then the relay contact for Remote Ready is closed. If the blower shows any error or is in ‘STOP’ status, the Remote Ready relay is opened.

5.2.1.2 Run

Run signal is closed when the blower is in operation.

5.2.1.3 Start/Stop

The relay status is ‘CLOSED (ON)’ for run and ‘OPEN (OFF)’ for stop.

5.2.1.4 SV

An analog input signal of 4-20mA can be used to modify the operating SV.

5.2.1.5 PV

An analog output signal from the blower (4-20mA) is available for SCADA system as a present value of the machine for flow, current, pressure, or DO.

5.2.1.6 Alarm

The relay status is closed (ON) when an alarm signal takes place.

5.2.1.7 Error

The relay status is closed (ON) when an error occurs. The unit will be shut down.

5.2.1.8 Power

The relay status is ‘OPEN’ when power is disconnected but ‘CLOSED’ when power is connected.

©2020 Aerzen Turbo Co., Ltd.

5.2.1.9 Load

The relay status is ‘OPEN’ during unload operation and ‘CLOSED’ during load operation.

5.2.2 Procedure for I/O Terminal Block control

The signal for ‘Start’ can be enabled only when the signal for ‘Remote Ready’ is ON. The blower normally stops if the start signal is OFF, and emergency stops if an error occurs. When the blower stops, signals for ‘Remote Ready’ and ‘Normal Operation’ are all OFF.

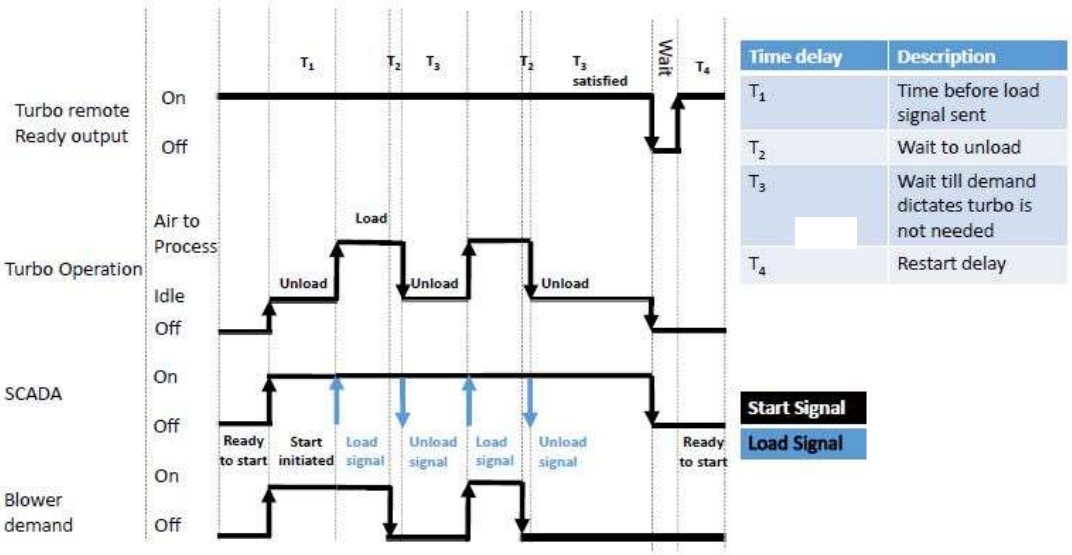

Time delay	Description
T_1	Time before load signal sent
T_2	Wait to unload
T_3	Wait till demand dictates turbo is not needed
T_4	Restart delay

Fig. 5-26 Procedure for hardwire remote control

- Set operating mode to ‘I/O Terminal Block’ via HMI on the blower front panel
- Verify that the signal for ‘Remote Ready’ is ON (relay ‘CLOSED’)
- Turn on the blower by making the signal for ‘Operational Start’ ON
- Verify that the signal for ‘Normal Operation’ is ON (relay CLOSED)
- Shut down the blower by making the signal for ‘Operation Start’ OFF

5.3 Fieldbus operation

Aerzen Turbo blowers can support industrial communication protocols such as Modbus RTU, Modbus TCP, Ethernet/IP, Profibus DP and Profinet IO to communicate with plant MCP (master control panel) or SCADA system via an optional communication converter. Please refer to the protocol manual.

5.4 Unacceptable operating practices

Following actions must be avoided.

- Stopping the blower by pushing the emergency stop button under normal operating conditions
- Exerting static or dynamic forces onto the blower discharge flange and thus also the discharge cones. Discharge valves prior to the common header should always remain open 100%
- Operation in improperly ventilated areas
- Operation with pressure spikes causing the blower to go into surge mode and

©2020 Aerzen Turbo Co., Ltd.

shut down without unloading and cooling the motor off

- Operating with power blackout, unacceptable voltages, voltage fluctuations, and residual harmonics in the power supply
- Operation with incorrect and/or improper maintained air filters or without air filters
- Operation with removed sound enclosure panels (will affect or completely void the warranty)
- Operation below minimum and above maximum blower speed
- Operation with too much pressure loss on motor and/or VFD cooling duct
- Operation without customer pipe under all operating conditions
- Operation with any medium other than air
- Outdoor operation without proper weather protection
- Placing foreign objects or substances into the blower package. Do not place foreign objects or substances near the blower package or suction piping/housing where they may be pulled into the blower suction. Foreign objects and substances sucked into the high-speed impeller may cause serious damage or injury. Do not change or modify intake filters during blower operation
- Exceeding the maximum nameplate pressure rating of the blower
- Closing any installed main suction or discharge valves during operation. Unexpected closure of these valves may result in surge
- Performing maintenance while the blower is in operation
- Not operating the blowers on a regular basis. In case the turbo blower is not operating regularly it must be operated in unload or load modus minimum once every four weeks to avoid condensation

5.5 Recommended operating practices

Following practices are recommended.

- Continuous operation in idle / unload mode if the blower is being shut down frequently
- Operating in Current Mode is preferred

©2020 Aerzen Turbo Co., Ltd.

6 MAINTENANCE

6.1 Safety instructions

6.1.1 Improperly performed maintenance work

WARNING!

Risk of injury from improper maintenance work.

Improper maintenance may lead to serious personal or material damage.

- Perform maintenance work when the machine has been taken out of commission
- Secure the machine against restarting
- Allow the machine to cool down to ambient temperature
- Before beginning work, ensure there is enough space for installation work
- Check tidiness and cleanliness of the work area
- Only perform maintenance work with suitable tools
- Ensure removed components are re-installed correctly
- Re-install all fastening elements and observe the screw tightening torques

6.1.2 Securing the machine against restarting

WARNING!

An unauthorized or unregulated restart can have fatal consequences.
An unauthorized or unregulated restart of the machine can lead to serious or fatal injuries.

There may be people located in the hazard area.

- Before beginning work, switch off the energy supply and secure it against restarting

6.1.3 Electric currents

DANGER!

Risk of fatal injury from electric current.

Coming into contact with live components poses an immediate and potentially fatal risk of electric shock. Even apparently harmless electrical components can carry high voltages. Electronic components in the incoming and control cabinet store electrical charges that are retained for some time even after deactivation of the power supply. The circuit breaker carries voltage even with the main circuit breaker set to off. Coming into

©2020 Aerzen Turbo Co., Ltd.

contact with these components can lead to fatal injuries. Working on electrical system should only be carried out by qualified electrical personnel.
Prior to beginning work on live parts that do not require to carry voltage for testing, disconnect them from the building's power supply. Secure against restarting.

- After approx. 20 minutes waiting time, check that there is no live current
- When working under power, avoid all contact with surrounding electrical components
- Never use water or high-pressure jets for cleaning in the vicinity of the machine

6.1.4 Requirements for personnel

The maintenance work described here may only be performed by the designated personnel. The personnel entrusted with the respective maintenance tasks are listed in the maintenance plan.

- For preparation of maintenance plan: Service personnel
- For cleaning after maintenance: User
- For commissioning after maintenance work: Service personnel / Authorized person

6.1.5 Protective equipment

For maintenance, following PPE may be necessary.

- Protective work clothing
- Safety shoes
- Hearing protection
- Protective gloves
- Safety goggles
- Industrial hard hat

6.1.6 Special tools

For maintenance purpose, general tools, auxiliary materials, and locking key are required.

6.2 Important reminders

Check regularly to ensure that main blower and cooling fans are operating properly. Do NOT disassemble or reassemble blowers without permission from Aerzen technicians. Repair costs as a result of unauthorized assembly or disassembly will not be covered under warranty. If abnormal operation is observed, shut the blower down and contact an Aerzen technician for assistance. In the event of a blower failure and automatic shut-down, record the Event Log/Error Code and contact an Aerzen technician prior to restarting the blower.

©2020 Aerzen Turbo Co., Ltd.

6.3 Maintenance schedule

Table 6-1 Maintenance recommendations

Interval	Maintenance		Authority
Monthly	Check filters for contamination	- Pre-filter - Medium filter	User
Annual	Visual inspection	- Piping system for any leakage - Cleaning the intake and exhaust air covers	User
		- Checking of main inverter and inverter fan - Checking of turbo motor	Authorized personnel
	Cleaning intake and exhaust	- Exhaust air opening of blow off valve (BOV) - Cooling system's exhaust air outlet	User
	Checking emergency stop function		Authorized personnel

6.4 Air filter replacement

Air filters are located at rear-side of the machine. While the machine is stopped, access the filters by opening the hinged door. The main filter elements may be pulled from their sockets to be replaced. The filters for process air are located on upper side and the filters for the VFD cooling air are on lower side. Ensure both sets of filters are clean. Note that the number of medium filters depend on blower machine model.

Fig. 6-1 Position of medium filters

- Open the filter door for motor (upper) and VFD (lower) by pulling door edge
- Replace medium filters

Installation of the filters is the reverse order of removal.

6.5 Pre-filter replacement (optional)

Pre-filter medium has to be replaced regularly at least within 6 months or when necessary depending on surround environments of installation place. The pre-filter frame and filter medium can be installed on the motor room filter area of the package by user. The filter medium can be inserted into the pre-filter frame by user.

©2020 Aerzen Turbo Co., Ltd.

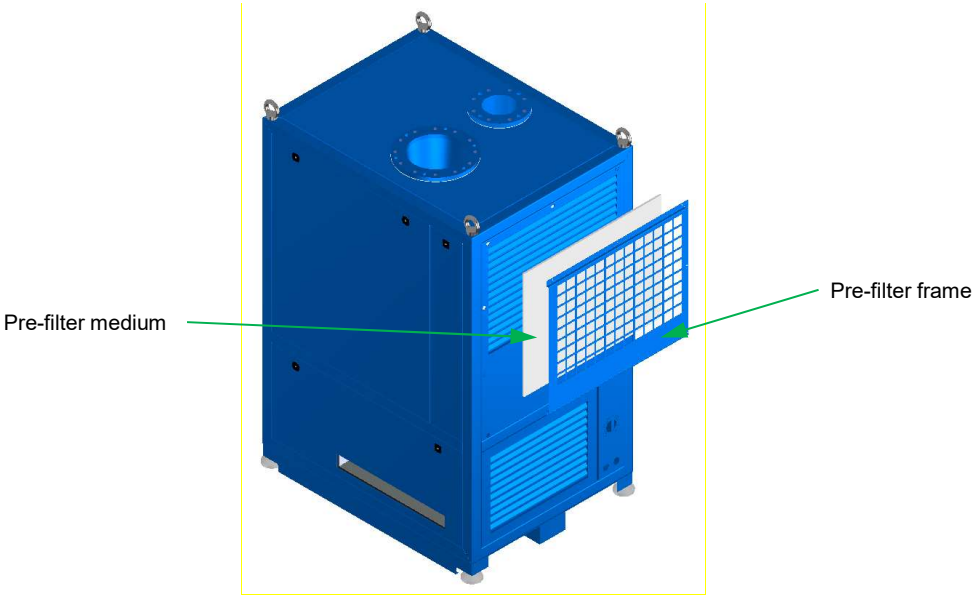

Fig. 6-2 Pre-filter replacement (optional)

6.6 Replacement parts

Some parts may deteriorate with age because their structures or physical characteristics, which leads to reduced performance or fault of the machine. For preventive maintenance, following parts must be replaced periodically based on environment conditions.

Table 6-2 Recommendations

Part Name	Replacement Cycle	Action
Medium Filter	6 months or when necessary	Replace the filter with new one
Cooling fans (of the inverter)	10 years or when necessary	Replace the fans with new ones
Pre-filter	2 months or when necessary	Replace the filter with new one

©2020 Aerzen Turbo Co., Ltd.

7 TROUBLESHOOTING

7.1 Safety instructions

7.1.1 Improper fault rectification

WARNING!

Risk of injury from improper operation fault rectification.

Improper fault rectification may lead to serious personal or material damage.

- Perform maintenance work when the machine has been taken out of commission
- Secure the machine against restarting
- Allow the machine to cool down to ambient temperature
- Before beginning work, ensure there is enough space for installation work
- Check tidiness and cleanliness of the work area
- Attempt to rectify faults with suitable tools
- Ensure removed components are re-installed correctly
- Re-install all fastening elements and observe the screw tightening torques

Before restarting, make sure followings;

- All safety and protective equipment is installed and functioning correctly
- There are no persons in the hazard area

7.1.2 Securing the machine against restarting

WARNING!

An unauthorized or unregulated restart can have fatal consequences.
An unauthorized or unregulated restart of the machine can lead to serious or fatal injuries.

There may be people located in the hazard area.

- Before beginning work, switch off the energy supply and secure it against restarting

7.1.3 Electric currents

DANGER!

Risk of fatal injury from electric current.

©2020 Aerzen Turbo Co., Ltd.

Coming into contact with live components poses an immediate and potentially fatal risk of electric shock! Even apparently harmless electrical components can carry high voltages. Electronic components in the incoming and control cabinet store electrical charges that are retained for some time even after deactivation of the power supply. The circuit breaker carries voltage even with the main circuit breaker set to off. Coming into contact with these components can lead to fatal injuries. Working on electrical system should only be carried out by qualified electrical personnel.

7.1.4 Requirements for personnel

The fault rectification work described here may only be performed by the designated personnel. The personnel entrusted with the respective fault rectification tasks are listed in the fault description table in addition to their designated tasks.

- For requirements in the event of faults and for preparations for fault rectification work: Authorized electricians / Service personnel / Authorized personnel
- For commissioning after maintenance work: Service personnel / Authorized personnel

7.1.5 Protective equipment

For fault rectification work following PPE may be necessary.

- Protective work clothing
- Safety shoes
- Hearing protection
- Protective gloves
- Industrial hard hat

7.1.6 Special tools

For fault rectification work following tools are necessary.

- General tools
- Tools for authorized electricians
- General measurement tools and equipment
- Locking key

Requirements for replacement of heavy items such as the motor assembly or the inverter assembly are;

- Lifting equipment
- Transport equipment

7.1.7 Behavior in the event of faults

DANGER!

Risk of injury during fault rectification.

©2020 Aerzen Turbo Co., Ltd.

DANGER!

Risk of fatal injury from electric current.

- In the event of a fault, activate the EMERGENCY STOP immediately
- Establish the cause of the fault
- Switch off the main circuit breaker and secure it against restarting
- Immediately inform the responsible staff on location about the fault
- Ensure there is no live current
- Earth the unit
- Cover or shut off adjacent live parts

7.2 Faults at ready status

Table 7-1 Fault list at ready

No.	Fault	Cause	Inspection/Maintenance	Authority
1	P1, P2 or P3 Pressure Sensor Check	ΔP at filter > 5kPa DP3 > 5kPa OP2 > 70kPa	Change sensor / controller	Service personnel
2	T1 or T2 Temperature Sensor Check	T1 > 100℃ or T2 > 150℃	Change sensor / controller	Service personnel

7.3 Warnings during running

Table 7-2 Warning list during running

No.	Warning	Cause	Inspection/Maintenance	C/P	Authority
101	Filter Blockage	ΔP at filter > CP value	Clean/change filter Check controller and CP value	28	Service personnel / Authorized personnel
102	High T2	T2 > CP value	Check temperature sensor, controller, operating condition	29	Service personnel
103	High T1	T1 > CP value	Check temperature sensor, controller, operating condition	30	Service personnel / Authorized personnel
104	High P2	OP2 > CP value * 0.98	Check operating condition	9	Service personnel / Authorized personnel
106	Surge	Flow < Surge flow + CP * 0.1	Check operating condition, CP value	18	Service personnel / Authorized personnel
126	High Motor Temperature	Motor temperature > 180°C	Check motor cooling		Service personnel
131	Communication Checksum Warning between MCU & IG5	Communication fail between MCU & IG5	Check communication cable, connection		Service personnel / Authorized personnel
140	Uninterrupted Power supply alarm	General alarm of UPS	Check Uninterrupted Power supply module		Service personnel / Authorized personnel

©2020 Aerzen Turbo Co., Ltd.

No.	Warning	Cause	Inspection/Maintenance	C/P	Authority
152	W02, Drive Digital input ‚Negative limit switch' active	Digital input 'Negative limit switch' active	Check Negative limit switch		Service personnel
156	W06, Power output temperature high	Power output temperature > Parameterized warning threshold W06	Check operation condition		Service personnel / Authorized personnel
157	W07, Motor temperature high	Motor temperature > Parameterized warning threshold W07	Check Motor, operation condition		Service personnel
164	W14, Ambient temperature high	Ambient temperature > parameterized warning threshold W14	Check Ambient temperature		Service personnel / Authorized personnel
166	W16, Safety circuit is active	Safety circuit is active	Check Safety circuit		Service personnel

©2020 Aerzen Turbo Co., Ltd.

7.4 Faults during running

Table 7-3 Faults list during running

No.	Fault	Cause	Inspection/Maintenance	C/P	Tripping Pattern	Authority
201	Filter Blocked	Δp at filter > CP value	Clean/change filter Check controller and CP value	8	Idling stop	Authorized personnel
202	Pressure High	OP2 > CP value	Check operating condition	9	Idling stop	Authorized personnel
211	Fan Inverter Fault	KEB cooling turbo inverter failure	Check job site, fan motion, operating condition, KEB cooling turbo inverter		Immediate stop	Service personnel
215	Starting Fail – 2	Below 10,000rpm after start	Check motor, main & fan VFD, CP value	1	Immediate stop	Service personnel
222	T1 High	T1 > CP value	Check job site, operating condition, controller, T1 sensor, and CP value (detected only at load condition)	10	Idling stop	Authorized personnel
223	BOV Fault	Not closed	Check job site and CP value	44, 45	Idling stop	Service personnel
224	Surge Fail #1	Surge	Check job site, operating condition, and CP value	64 ~67	Idling stop	Service personnel / Authorized personnel
225	Surge Fail #2	Real time surge	Check job site and CP value	44	Idling stop	Service personnel / Authorized personnel
236	Emergency Stop	Touch screen version only	Press emergency stop button		Immediate Stop	Service personnel
238	Motor Temperature High	Motor temp > 200℃	Checking cooling system		Idling stop	Service personnel
239	Power Off	Utility power interrupted	Check utility power		Immediate Stop	Authorized personnel / Authorized electrician
245	Fan Motor Temperature High	Fan Motor temp > 200℃	Checking fan motor cooling system		Idling Stop	Service personnel
251	Communication fail(CPU – HMI)	LAN cable or Ethernet switch fault	Check LAN cable connection Check Ethernet switch's Lamp			Service personnel
252	Communication fail(Subnet)	Serial cable or Communication converter fault	Check Communication Converter's LED Status Check Serial cable		Immediate Stop	Service personnel
257	Electric surge protector Defect	SPD(Electric surge protector) defected	Check SPD' indicator, In case of red indicator, replace SPD		Immediate Stop	Service personnel
258	Communication time out	Communication time out between CPU(J5) and IG5	Check communication cable, IG5 logic board			Service personnel
267	E11, Communication / Bus system error	Motor is stopped by parameter driven ramp and drive is disabled (Controlled standstill).	Monitoring of bus communication led to switch-off			
794	E26, Motor temperature too high	Motor is stopped by error ramp and current limitation	Wrong parameters entered for the motor or wrong dimensioning of the motor			
795	E27, Ambient temperature too high	Motor is stopped by error ramp and current limitation	Cooling of the device is not sufficient			
796	E28, Power output stage temperature too high	Motor is stopped by error ramp and current limitation	Cooling of power stage is not sufficient (heat sink)			
1322	E42, Overvoltage in DC link	Drive is immediately disabled, motor coasts to standstill	No ballast resistor is connected or ballast resistor is dimensioned too small			
1323	E43, Under voltage in DC link	Drive is immediately disabled, motor	DC link is not connected			

©2020 Aerzen Turbo Co., Ltd.

No.	Fault	Cause	Inspection/Maintenance	C/P	Tripping Pattern	Authority
		coasts to standstill				
1324	E44, Commutation lost	Only HSPWM: Drive is immediately disabled, motor coasts to standstill	Mechanical overload/wrong parameters			

8 REVISION HISTORY

No.	Revision Date	Document No.	Revised By	Summary of Revision	Remark
1	2018-10-01	OMTB-G5P-V000-EN	H. Park		First issued
2	2019-09-17	OMTB-G5P-V010-EN	C. Kim	Revised with G5^{plus} V02	
3	2020-05-12	OMTB-G5P-V020-EN	C. Kim	Revised the operation	
4	2020-07-01	OMTB-G5P-V030-EN	C. Kim	Revised the operation	

©2020 Aerzen Turbo Co., Ltd.

Aerzen Turbo Co., Ltd.
63 Geumhoseonmal-gil, Bugang-myeon
Sejong 30077, Korea
Tel.: +82 44 277 6500
Fax: +82 70 4170 4567
Email: service@aerzen-turbo.com
Web: www.aerzen-turbo.com
www.aerzen.com

AERZEN
EXPECT PERFORMANCE

SECTION 8

AERZEN

PERFORMANCE TEST POINTS

The following table lists the design conditions that will be evaluated during the performance test. Design points with guaranteed wire to air power are indicated along with the acceptable tolerance on power. The test will follow Aerzen USA's Turbo Blower Test Protocol 0263-T-6. Test points shall be selected to match the isentropic head and volumetric inlet flow (ICFM) at the test site conditions to the isentropic head and volumetric inlet flow (ICFM) at the design conditions shown in the table.

Design Conditions:

Design Pt	Blower SCFM (specified)	Inlet Pressure (psia)	Discharge Pressure (psig)	Inlet Temperature (F)	Relative Humidity %	Predicted Wire to Air Power (KW)	Blower ICFM (volume flow)	Isentropic Head (ft-lb/lb)	Density Inlet (lb/ft3)	Mass Flow (lb/min)	Predicted Wire to Air Efficiency %	Guaranteed Power (Y/N)	Power Tolerance
1	3552	14.42	9.60	104	20	158.60	3893	16607	0.0687	267.31	63.25%	N	N/A
2	2841	14.42	9.60	104	20	118.10	3113	16607	0.0687	213.81	67.94%	N	N/A
3	2131	14.42	9.60	104	20	85.90	2335	16607	0.0687	160.37	70.06%	N	N/A
4	1231	14.42	10.00	104	20	54.80	1349	17186	0.0687	92.64	65.65%	N	N/A

TURBO BLOWER TEST PROTOCOL

1.0 Scope

This protocol provides the specification and procedure for testing the total wire to air performance of an Aerzen Turbo blower. The purpose is to determine the tested or guaranteed performance as well within allowable tolerances. This protocol follows the methods of PTC 10 modified to suit the specifics of measuring wire to air blower performance and to add practicality.

2.0 Definitions and Abbreviations

2.1 Blower package- Defined as the limits of the blower including the

2.1.1 Inlet filter

2.1.2 All electrical components and power devices that are part of blower controls to operate the turbo blower including that of MSM motor turbo inverter and controls.

2.1.3 Compressor core- Direct connected impeller and shroll assembly

2.1.4 All cooling components including that of inverter cooling fans and motor cooling fans independently filtered all connected or direct driven by the blower motor.

2.1.5 The blower package does not include any form of filtering device silencer or other components not installed with the limits defined above.

2.2 package inlet- The cross-sectional plane of the package upstream of the process air package filters is referred to as the package inlet. All parameters relating to this inlet plane shall equal atmospheric conditions to be determined as point 1

2.3 Blower inlet- The cross-sectional plane of the process air at the inlet to the compressor core defined in 2.1.3 inside the motor cavity. All parameters relating to this inlet plane to be determined as point 1

2.4 package discharge- The cross-sectional plane of the package discharge plane is referred to as the discharge of the blower package. All parameters relating to this discharge plane to be determined as point 2

2.5 SCFM (Standard Cubic Feet per Minute- The volume of air in cubic feet per minute considering the gas state of 68ºF 14.696 psia and 36% relative humidity designated as SCFM where the S denotes this as a standard gas condition. The equivalent gas state in SI units is 20ºC 0.1034 bara and 36% relative humidity designated as cubic meters per minute.

2.6 ACFM (Actual Cubic Feet per Minute- is the actual volume flow rate $\dot{V}_{actual}$ in cubic feet per minute considering the local conditions at the location of the flow measurement. ACFM is determined by the delivered mass flow rate $\dot{m}$ divided by the total density at the flow measurement location. The SI designation is actual cubic meters per minute.

2.7 Isentropic Compressor Work- Isentropic Head-The ideal work required to compress a unit mass from inlet pressure and temperature to discharge pressure while at constant entropy for changes in the thermodynamic properties of the gas during the compression as an isentropic process

2.8 Blower package Total Wire to Air power- The blower package Total Wire to Air power P_{wire} is the electrical power measured at the input to the blower package. This shall include all power losses in electrical components of the compressor package as defined in 2.1.1

□.□ T□eoret□al □as □ower- T□e t□eoret□al □as □ower □s t□e □ass flow rate □ □lt□□l□ed □□t□e se□tro□□□ □ead □ased □□o□ □00□ e□□□e□□□.

3.0 □□ara□tees

3.□ □o□d□□o□s □or t□e □□ara□tee- □re□o□sl□ a□reed □□o□ □o□d□□o□ state□e□t □ro□ded d□r□□□ t□e sale □etwee□ Aer□e□ □SA □or□orat□□ a□d t□e □□sto□er. A□□ state□e□ts w□et□er □□ writ□□□ or oral □re□rese□tat□□ o□ data □or e□□□eer□□□ s□eets t□at □ar□ fro□ t□e □o□tra□t a□d □□r□ase a□ree□e□ts w□ll □ot □e □ s□o□str□ed as a □□ara□tee □or t□s test□□□.

3.□ Sta□dard Aer□e□ t□r□o □lower tolera□□e □s □ □□ o□ Total □□□□t □ower.

3.3 Aer□e□ □SA□s □□ara□tee □s □ased □□o□ □er□or□a□□e test□□□ □□ a □o□trolled e□□□ro□□e□t a□d does □ot □□l□de □eld test□□□.

4.0 Meas□re□e□t □ra□t□□e

4.□ T□e test sta□d w□ll □□□or□orate data □eas□re□e□t □et□ods as □de□t□□ed □□ □T□ □3. Flow w□ll □e □eas□red o□ t□e d□s□□ar□e s□de □s□□□ or□□□e □lates □ased o□ t□e □et□ods des□r□□ed □□ □T□ □□.□.

4.□ □le□tr□al □ower w□ll □e □eas□red at □□□o□ □□□ del□er□ to □lower □a□□a□e.

4.3 □□str□□e□tat□□ □sed s□all □e as re□o□ □e□ded □□ □T□ □3.

4.4 All □eas□re□e□ts □sed to deter□ □□e w□re to a□ □ower s□all □e re□orded fro□ □□str□□e□ts □□de□e□de□t o□ t□e □lower □a□□a□e a□d s□all □e re□orted w□t□o□t □orre□t□□ □or tolera□□es or □□□erta□□t□ □s□□□ t□e □eas□red □al□es.

4.□ □al□rat□□ □ert□□□at□□ □or ea□□ □□str□□e□t □s a□a□la□le o□ re□□est.

□.0 □ro□ed□re

□.□ Test □o□□ts s□all □e sele□ted to □at□□ se□tro□□□ □ead a□d □ol□□etr□ □□let flow □□□FM □at t□e test s□te □o□d□□o□s to t□e des□□□ o□erat□□□ □o□□ts. T□e se□tro□□□ □ead s□all □e □eld to w□t□□□ -0/□□□ o□ t□e des□□□ □o□□t se□tro□□□ □ead a□d □□FM s□all □e □eld to w□t□□□ □/-□□ o□ t□e des□□□ □o□□t □□FM. T□e rat□ o□ s□e□□□ □eats□□ s□all □e □al□□lated □ased □□o□ t□e s□e□□□ed a□d test a□ □□e□t □o□d□□o□s.

□.□ □□ so□e □ases□□art□□□larl□ w□t□ s□aller □□ T□r□o □a□□a□es□t □a□ □ot □e □oss□le to test w□t□□□ t□e a□o□e tolera□□es. □□ t□ese □ases t□e test □o□□t se□tro□□□ □ead s□all □e □eld to w□t□□□ □/-□□ o□ t□e des□□□ □o□□t se□tro□□□ □ead a□d □□FM s□all □e □ra□□eted a□o□e a□d □elow t□e des□□□ □o□□t □□FM w□t□□□ 3□ o□ t□e des□□□ □□let flow. T□e w□re to a□ □ower s□all □e □al□□lated □ased □□o□ t□e a□era□e □ower □etwee□ t□e two read□□□s.

□.3 □□ so□e □ases□□t □a□ □ot □e □oss□le to a□□□e□e a flow □□□□er t□a□ t□e des□□□ □o□□t □□FM d□e to a □□□□er □□let de□s□t□ at t□e test □o□d□□o□s t□a□ t□e des□□□ □o□d□□o□s. □□ t□s □ase□□ T□ □3 allows t□e s□eed to □e red□□ed □□ as □ □□□□ as 4□ . At t□s □o□d□□o□ a□d as □er t□e relat□□s□□□ de□□□ed □□ t□r□o □a□□□□er □a□□□□t□ laws t□e □orres□o□d□□□ □ol□□etr□ flow □a□□e 4□ less t□a□ s□e□□□ed a□d t□e □orres□o□d□□□ se□tro□□□ □ead □a□□e 8□ less t□a□ s□e□□□ed. At t□ese □o□d□□o□s t□e sta□e □s o□erat□□□ at t□e sa□e e□□□e□□□ as t□e s□e□□□ed des□□□ □o□□t. T□e □a□□□e s□all □e tested at t□e □□□□est flow a□d asso□ated se□tro□□□ □ead □oss□le at t□e test □o□d□□o□s a□d w□t□□□ t□e □er□or□a□□e l□□□ts o□ t□e □a□□□e. T□e w□re to a□ e□□□e□□□ a□d □al□□lated □ower s□all □e deter□□□ed as des□r□□ed □□ 6.□.

□.4 □ror to t□e □er□or□a□□e test□ea□□ □□t s□all □□der□o a □retest □□e□□ a□d □□□□t□o□al test. Be□ore test read□□□s are ta□e□□t□e t□r□o □lower s□all □e o□erated s□□□□e□t□l□lo□□ e□o□□□ to e□s□re sta□le □o□d□□o□s are rea□□ed. Fl□□t□at□□s o□a□□l□a□le □eas□re□ e□ts s□all □e □a□□ta□□ed w□t□□□ t□e l□□□ts esta□l□s□ed □□ □T□ □3.

□.□ T□ree read□□□s s□all □e re□orded at ea□□ test □o□□t at a□ □□ter□al o□□ □ □□□tes □etwee□ read□□□s. T□e res□lt at ea□□ test □o□□t w□ll □e t□e a□era□e o□t□e 3 read□□□s. All □str□□ e□t read□□□s s□all □e re□orded w□t□o□t □orre□t□□ □or tolera□□es or □□□erta□□t□.

6.0 Test Data A□al□s□s

6.□ T□e w□re to ar e□□□□e□□□ at ea□□ test □o□□t s□all □e □al□□lated □ased □□o□ t□e t□eoret□□al se□tro□□□ □ower d□□ded □□ t□e a□t□al □eas□red □ower. T□e □al□□lated w□re to ar □ower at t□e des□□□ □o□□ts s□all □e deter□ □ed □□ □ □lt□l□□□□ t□e □eas□red w□re to ar □ower □□ t□e rat□ o□ t□e des□□□ se□tro□□□ □ower to t□e test se□tro□□□ □ower.

6.□ A □o□ □ar□so□ o□ t□e e□□e□ted w□re to ar □ower to t□e □al□□lated w□re to ar □ower □or ea□□ des□□□ □o□□t s□all □e □rese□ted □□ a ta□le. T□e □er□e□t d□□ere□□e □etwee□ t□e res□lts s□all □e w□t□□□ t□e allowa□le test tolera□□e.

□.0 Test Re□ort: A □o□ □re□e□s□e re□ort s□all □e □ro□ded □□□l□d□□□ t□e □ollow□□□ □□□or□at□o□:

□.□ □e□eral □□□or□at□o□ re□ard□□□ t□e test as □er □T□ □3.

□.□ A ta□□lar s□□ □ar□ o□ t□e des□□□ □o□□ts□test □o□□ts □or ea□□ □□□t□a□d a □o□ □ar□so□ o□ des□□□ w□re to ar □ower □s. □al□□lated w□re to ar □ower □or ea□□ des□□□ □o□□t a□d ea□□ □□□t

□.3 A des□r□□t□o□ o□ t□e test set□□ a□d □et□od □□l□d□□□ □ro□ess a□d □str□□ e□tat□o□ d□a□ra□s a□d □□oto□ra□□s.

□.4 Res□lts □or ea□□ □□□t □□□l□d□□□ t□e □retest □□e□□l□st□□□□□t□o□al test□so□□d test a□d □□□rat□o□ test.

□.□ T□e raw data □olle□ted d□r□□□ t□e □er□or□ a□□e test as well as ta□□lated data o□ t□e a□era□e test read□□□s□□al□□lat□o□s□□er□or□ a□□e □□r□es a□d □□al res□lts □or ea□□ □a□□a□e a□d test □o□□t

8.0 Test Fa□□lt□: Aer□e□ □SA des□□□ed a□d □o□str□□ted a □□r□ose □□□lt test □a□□lt□ □or test□□□ □lower a□d □o□ □ressor □a□□a□es to t□e re□□re□ e□ts o□□T□ □3. T□s □a□□lt□ □eat□res □ □lt□□le test stat□□s□state o□ t□e art □str□□ e□tat□o□ a□d data a□□□s□t□o□□as well as □low □eas□re□ e□t □a□a□□lt□ o□er t□e ra□□e o□ Aer□e□s t□r□o □rod□□ts. T□s □a□□lt□ s lo□ated at:

Aer□e□ □SA

□08 □□de□e□de□□e Wa□

□oates□lle□□A □□3□0

□.0 Test □erso□□el: □a□□ test w□ll □e □o□d□□ted □□ a □□al□□ed T□r□o te□□□□□a□ a□d o□ersee□ □□ a □□al□□ed test e□□□eer. □□sto□er wit□essed tests are a□a□la□le □□o□re□□est.

A□□e□d□□A: □□□at□□s a□d □o□□ers□o□s

De□s□t□:

$$\rho = \frac{p}{R_{WET} \cdot T}$$

□deal □as □o□sta□t□□orre□ted to a□t□al □o□d□□o□s:

$$R_{WET} = 53.353 \times \left(\frac{1}{1 - (\frac{RH_a \times PV_a}{P_b}) \times .378} \right)$$

□ress□re Rat□o:

$$r_P = \frac{p_{DISCH.}}{p_{INLET}}$$

□se□tro□□□ □ead□□orre□ted to a□t□al □o□d□□o□s:

$$W_s = \left(\frac{k}{k-1}\right) \times R_{WET} \times T_1 \times Z \times \left(r_P^{\frac{k-1}{k}} - 1\right)$$

□ress□re Rat□o□□orre□ted to test □o□d□□o□s:

$$r_{P\_COR} = \left[\left(1 + \left(\frac{k-1}{k}\right)\left(\frac{W_S}{(R_{WET\_TEST})(T_{1\_TEST})}\right)\right)\right]^{\frac{k}{k-1}}$$

A□t□al Flow Rate □o□□erted □ro□ Sta□dard □o□d□□o□s to a□t□al □o□d□□o□s:

$$q_{ACFM} = q_{SCFM} \times \frac{T_a}{T_s} \times \frac{P_b}{P_a} \times \frac{P_s - (RH_s \times PV_s)}{P_b - (RH_a \times PV_a)}$$

Or□□□e □late Flow:

$$Q = C_0 A_0 Y \sqrt{\frac{2ZRT_1(P_1 - P_2)}{(MW)P_1(1 - \beta^4)}}$$

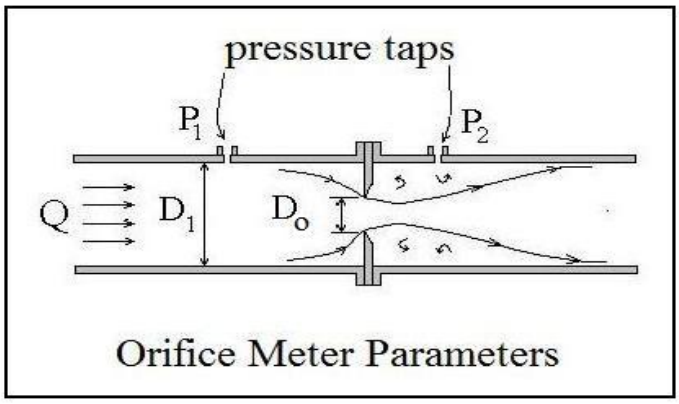

Mass Flow:

$$\dot{m} = q \cdot \rho$$

□se□tro□□□ □ower:

$$P_s = \dot{m} \cdot W_s$$

□red□□ted □ower:

$$P_{pr} = P_{test} \cdot \frac{P_{s,sp}}{P_{s,test}}$$

T□r□o□a□□□er□A□□□t□laws □or a □□e□ □a□□□e:

Flow: $$Q_2 = Q_1 . \frac{N_2}{N_1}$$

□se□tro□□□ □ead: $$W_2 = W_1 \cdot \left(\frac{N_2}{N_1}\right)^2$$

□ower: $$P_2 = P_1 \cdot \left(\frac{N_2}{N_1}\right)^3$$

NOTES:

1) ALL TEST BENCH INSTRUMENTS ARE LOCATED PER PTC 13.

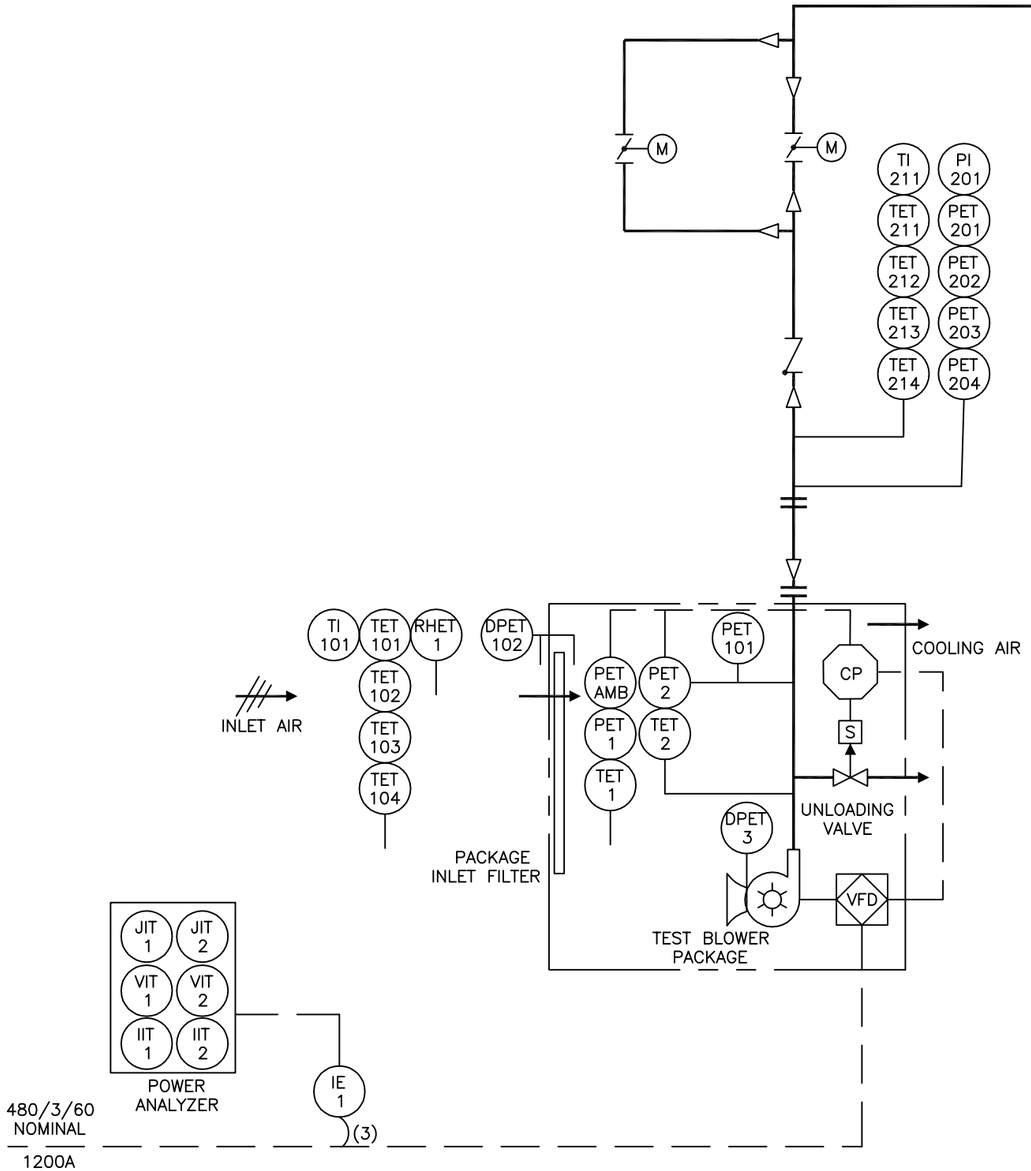

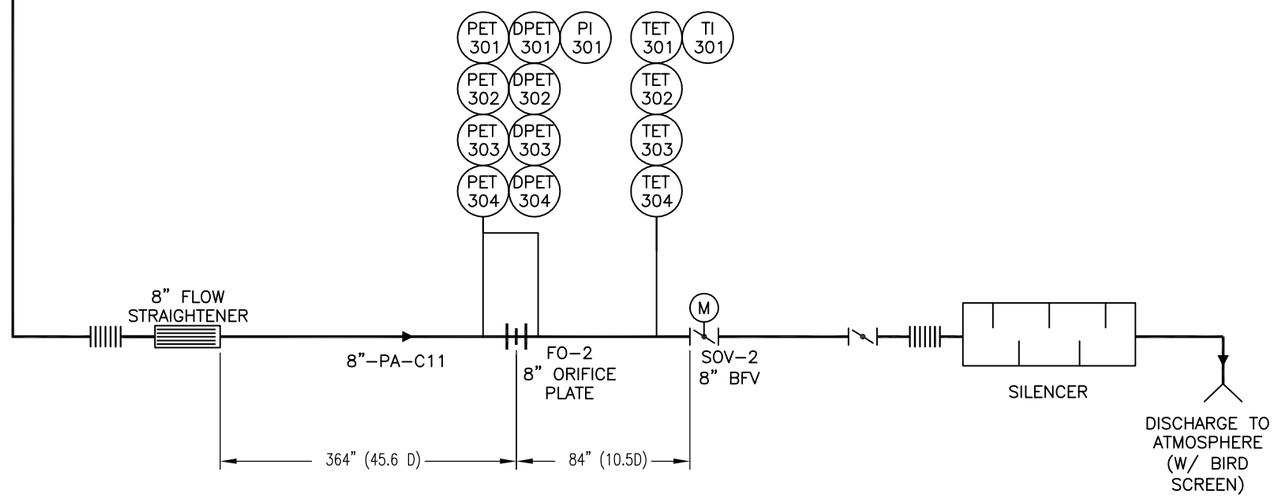

NOTICE:
THIS DRAWING AND ALL INFORMATION HEREIN IS THE PROPERTY OF AERZEN USA INC. AND ITS SUBSIDIARIES AND SHALL NOT BE REPRODUCED BY ANY MEANS IN WHOLE OR IN PART OR USED AS THE BASIS FOR MANUFACTURE WITHOUT WRITTEN PERMISSION.

CLASS: II

AERZEN USA CORP.
108 Independence Way, COATESVILLE PA 19320
(610) 380–0244 PH, (610) 380–0278 FX

TITLE PIPING AND INSTRUMENTATION DIAGRAM-8" ORIFICE
WEST TEST BENCH
S.O. 17-00525

DATE	DRAWN BY:	CHECKED BY:	P.M. APPROVAL:	SCALE:
7/31/18	MKA	JPS	MKA	MODEL SPACE 1 :1

DRAWING NO:	REVISION NO:	REVISION DATE:	SHEET:
WB-006773-08	0	7/31/18	1/2

PROCESS LINE TYPES

- SUPPLIED BY OTHERS
- * SUPPLIED BY OTHERS IF REQUIRED
- PRIMARY PROCESS FLOW
- SECONDARY PROCESS FLOW
- ELECTRICAL SIGNAL
- PNEUMATIC SIGNAL
- COMMUNICATION LINK
- REFERENCE EQUIPMENT

PROCESS LINE IDENTIFICATION

XX–YYY–ZZZZ
XX" = NOMINAL DIA. OF PIPE OR OD OF TUBING
YYY = FLUID DESIGNATION
ZZZ = MATERIAL SPECIFICATION
= NUMBER OF LINE SEGMENT

FLUID DESIGNATIONS

PA = PROCESS AIR

MATERIAL SPECIFICATIONS

C11 = CARBON STEEL, SCH 40
C12 = CARBON STEEL, SCH 80
P11 = PVC, SCH 40
P12 = PVC, SCH 80
S11 = 304 SS, SCH 10
S12 = 304 SS, SCH 40
S13 = 304 SS, SCH 80

ACTUATOR SYMBOLS

- CYLINDER / MOTOR (XX)
- E/P ELECTROPNEUMATIC
- MANUAL (SHOWN ONLY FOR CERTAIN HAND OPERATED VALVES)
- S SOLENOID (XX)
- DIAPHRAM (SPRING OPPOSED) (XX)
- DIAPHRAM (PRESSURE BALANCED) (XX)
- PRESSURE OR VACUUM RELIEF SPRING OR WEIGHT LOADED

NOTE: ON LOSS OF PRIMARY POWER (PNEUMATIC OR ELECTRICAL)

XX: FO = FAIL OPEN
FC = FAIL CLOSED
FI = FAIL TO INTERMEDIATE POSITION
BLANK = FAIL TO LAST POSITION

INSTRUMENT IDENTIFICATION TABLE

LETTER	FIRST LETTER		SUCCEEDING LETTERS		
	MEASURED OR INITIATING VARIABLE	MODIFIER	READOUT OR PASSIVE FUNCTION	OUTPUT FUNCTION	MODIFIER
A	ANALYSIS (2)		ALARM		
B	BURNER, COMBUSTION			CLOSE, STOP, DECREASE (1)	OFF (1)
C				CONTROL	
D		DIFFERENTIAL		OPEN, START, INCREASE (1)	
E	VOLTAGE		SENSOR (PRIMARY ELEMENT)		ENABLED (1)
F	FLOW RATE	RATIO (FRACTION)			FAIL (1)
G			GLASS, VIEWING DEVICE		
H	HAND				HIGH (OPENED)
I	CURRENT (ELECTRICAL)		INDICATE		
J	POWER	SCAN			
K	TIME, TIME SCHEDULE	THE RATE OF CHANGE		CONTROL STATION	
L	LEVEL		LIGHT		LOW (CLOSED)
M	MOTOR, MOTION (1)	MOMENTARY		MOTOR (1)	MIDDLE OR INTERMEDIATE
N					ON OR OPERATE (1)
O			ORIFICE, RESTRICTION		OVERLOAD (1)
P	PRESSURE, VACUUM		POINT (TEST) CONNECTION	PUMP (1)	
Q	QUANTITY (2)	INTEGRATE, TOTALIZE			
R	RADIATION		RECORD		
S	SPEED, FREQUENCY	SAFETY OR SOLENOID		SWITCH	
T	TEMPERATURE			TRANSMIT	
U	MULTIVARIABLE (2)		MULTIFUNCTION (2)	MULTIFUNCTION (2)	MULTIFUNCTION (2)
V	VIBRATION, MECHANICAL ANALYSIS			VALVE, DAMPER, LOUVER	
W	WEIGHT, FORCE		WELL		
X	UNCLASSIFIED (2)		UNCLASSIFIED (2)	UNCLASSIFIED (2)	UNCLASSIFIED (2)
Y	EVENT, STATE, PRESENCE			RELAY, COMPUTE, CONVERT	
Z	POSITION, DIMENSION			DRIVER, ACTUATOR UNCLASSIFIED FINAL CONTROL ELEMENT	

(1) USER'S CHOICE

INSTRUMENT/FUNCTION & LOCATION SYMBOLS

	FIELD (LOCAL) MOUNTED	PANEL MOUNTED		MOTOR CONTROL CENTER MOUNTED	
		ACCESSIBLE OR EXTERIOR	INACCESSIBLE OR INTERIOR	ACCESSIBLE OR EXTERIOR	INACCESSIBLE OR INTERIOR
DISCRETE INSTRUMENT	○	○	○	○	○
SHARED DISPLAY/CONTROL	▢	▢	▢	▢	▢
COMPUTER FUNCTION	⬡	⬡	⬡	⬡	⬡
PROGRAMMABLE LOGIC CONTROL	◇	◇	◇	◇	◇
PILOT LIGHT	○	○	○	○	○
HAND SWITCH MAINTAINED CONTACTS	HS	HS	HS	HS	HS
HAND SWITCH MOMENTARY CONTACTS	HMS	HMS	HMS	HMS	HMS
COMPOUND INSTRUMENTS (SHARE COMMON HOUSING)	○○	○○	○○	○○	○○

ANALYTICAL INSTRUMENTS

- XXX / XXX XX — EXPOSED PROBE OR GAS DETECTOR
- XXX / XXX XX — TAPPED OR SAMPLED
- XXX / XXX XX — IN–LINE

CGL = CHLORINE GAS
CLR = CHLORINE RESIDUAL
PH = PH
T = TURBIDITY
FLR = FLUORIDE
SCD = STREAMING CURRENT

VALVE & GATE SYMBOLS

- BUTTERFLY VALVE
- CHECK VALVE
- GLOBE, GATE, PINCH OR OTHER IN – LINE VALVE
- SAFETY RELIEF VALVE
- PLUG VALVE
- THREE WAY VALVE (ARROW IF SHOWN INDICATES FAIL OPEN PATH)

EQUIPMENT SYMBOLS

- XX CENTRIFUGAL PUMP
- TURBO BLOWER
- METERING PUMP – CHEMICAL
- XX CENTRIFUGAL COMPRESSOR OR BLOWER
- XX RECIPROCATING COMPRESSOR (PD)
- XX ROTARY COMPRESSOR (PD) OR BLOWER
- FAN

PRIMARY ELEMENT SYMBOLS

FLOW

- M ELECTROMAGNETIC
- CORIOLIS
- THERMAL DISPERSION
- ULTRASONIC TRANSIT – TIME OR DOPPLER
- VENTURI TUBE
- ORIFICE PLATE
- PROPELLER OR TURBINE
- VORTEX
- F1 ROTAMETER

MISCELLANEOUS SYMBOLS

- (REGULATED SIDE) PRESSURE REGULATOR
- VENT TO ATMOSPHERE
- TWO WAY VALVE FAIL OPEN
- TWO WAY VALVE FAIL CLOSE
- S PORT CLOSED (DE–ENERGIZED)
- PORT NEXT TO CLOSE WHEN ENERGIZED
- PORT ALWAYS OPEN

ELECTRIC SOLENOID VALVE SHOWN DE–ENERGIZED, ALL SOLENOID VALVES SHOWN IN FAILED POSITION (ELEC. OR PNEUMATIC THREE WAY SWITCH)

- FLOW STRAIGHTENER
- X EQUIPMENT CONNECTION WITH ELECTRICAL INTERLOCK
- SILENCER
- REDUCER/EXPANSION
- EXPANSION JOINT

NOTICE:
THIS DRAWING AND ALL INFORMATION HEREIN IS THE PROPERTY OF AERZEN USA INC. AND ITS SUBSIDIARIES AND SHALL NOT BE REPRODUCED BY ANY MEANS IN WHOLE OR IN PART OR USED AS THE BASIS FOR MANUFACTURE WITHOUT WRITTEN PERMISSION.

CLASS: II

AERZEN USA CORP.
108 Independence Way, COATESVILLE PA 19320
(610) 380–0244 PH, (610) 380–0278 FX

TITLE: PIPING AND INSTRUMENTATION DIAGRAM LEGEND
WEST TEST BENCH
S.O. 17-00525

DATE	DRAWN BY:	CHECKED BY:	P.M. APPROVAL:	SCALE:
11/3/17	MKA	JPS	MKA	MODEL SPACE 1 :1

DRAWING NO:	REVISION NO:	REVISION DATE:	SHEET:
WB-006773-02	1	11/7/17	2/2

TURBO BLOWER FUNCTIONAL TEST PROTOCOL

1.0 Summary

This protocol describes the procedure for functional testing of Aerzen multi-speed Turbo blower package. The purpose of this testing is to determine if the blower package meets the design functional requirements regarding operating noise levels and vibration levels. Reference 0063-T-6 for Aerzen USA's standard wire to air performance test protocol for Turbo blowers.

2.0 Definitions and Abbreviations

2.1 Blower package- Defined as the limits of the blower mounted on the base.
- 2.1.1 Package inlet filter does not include remote inlet filters.
- 2.1.2 All electrical components and devices that are part of blower assembly to operate the turbo blower mounted that of MSM motor turbo inverter and controls.
- 2.1.3 Blower core- Direct connected impeller and scroll assembly.
- 2.1.4 All cooling components mounted that of inverter cooling fans and motor cooling fans inside enclosed metal filter all connected or direct driven by main blower motor.
- 2.1.5 The blower package does not include any carbon filter silencers or other components not installed within the limits defined above.

2.2 Control parameter [XXX]: Software parameter that defines set point and range settings and alarm set points. Some values are user adjustable. Others range are set only allowed assembly or service technicians.

2.3 Functional test: Tests to determine if the blower package meets the design functional requirements regarding operating noise levels and vibration levels. Performance range test mounted on wire to air performance is considered separately from functional test and is not covered in this test protocol.

2.4 Free field: A reflection less space where sound pressure waves propagate free without reflection from any structure.

2.5 Local Control Panel [LCP]: Control panel and user interface mounted on the blower package and used to control and monitor the package operation.

2.6 Master Control Panel [MCP]: Control panel and user interface mounted external to the blower package and used to control and monitor the operation of multiple blower packages. Factory acceptance test [FAT] of the MCP is required is not covered in this test protocol.

2.7 Operating velocity: The rate of change displacement per unit time of a vibration object.

3.0 Guarantees

3.1 Conditions for the Guarantee- Agreed upon conditions stated at the provided for or during the sale between Aerzen USA Corporation and the customer. All statements whether in written or oral representation of data or engineering sheets that are part of the contract and purchase agreements will not be considered as a guarantee for this test.

3.2 Aerzen USA does not guarantee sound or noise levels of blower packages as installed at the job site due to variables and uncontrollable factors beyond our reasonable control. Noise levels are reported in free field conditions.

4.0 Measre e t ratie

4. All easre e ts sed to deter e e so d a d ratio le els s all e re orded ro str e ts de e de t o te lower a a e. al ratio ert ati o or ea str e t s a a la le o re est.

.0 F to al e e ro ed re

. Te a a e s s all ts e ted to e s re all ardware a d o e to s are se re a d ro erl stalled.

. Te ele tr al w r s ts e ted to e s re all o e to s are se re a d ro erl stalled.

.3 Te so tware ers o s o r ed.

.4 All a d alar sett s are e ed.

. Te a a e s all e r t r re-ar e start sto dle ode a d des o t o erato s.

. . O erato se e es are e ed.
. . O oard str e t al ratio s are e ed.
. .3 Alar s are e ed or ro er t to al t.

.6 . Re ere e sa le re ord s eet t te a e d.

6.0 D ratio Test:

6. a a e will e tested at a ar et o o erat o d tio s a d ar d ratio d r t e to al a d er or a e test . Total r t e s t all t e ra e o 3-4 o rs.

6. a a e s o tored or a alar o d tio s a d a or al o ses or e a or.

.0 ratio Meas re e t ro ed re:

. Te ratio eter sed or eas re e ts s a a o a odel 4 00. A elero eters se a et o ts.

. Meas re e t lo atio s are at te a s at to o otor a d a s at te otor s de as s ow t e res elow.

.3 Te a era e ratio elo t t te ra e o 0- s re orded / se RMS or ea eas re e t lo atio a d o erat o ts. ratio eas re e ts are re orded d r er or a e test at ea o te ro e t o erat o ts a d te odel des o t.

.4 Re ere e sa le re ord s eet t te a e d.

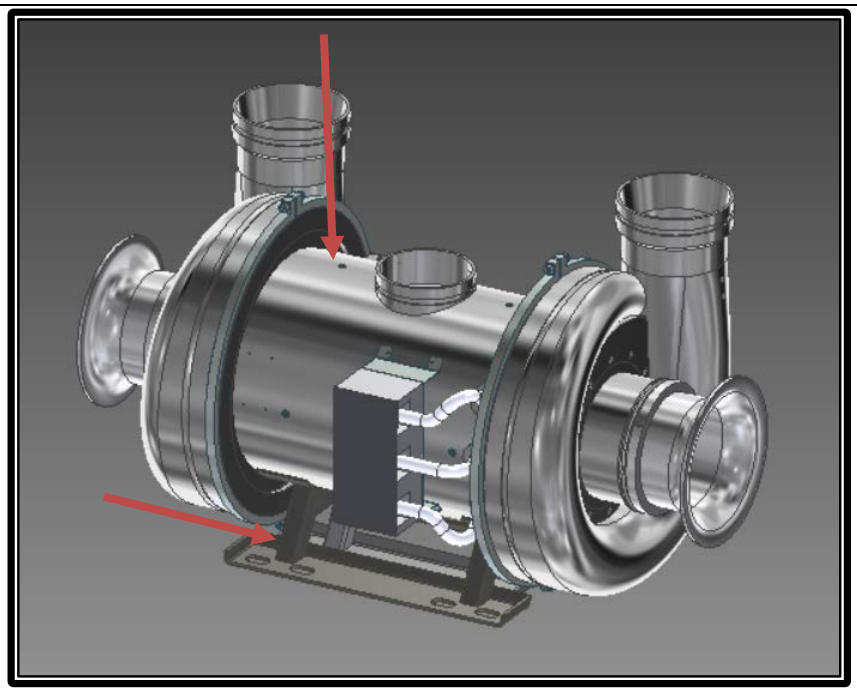

F□□re □.□: □□rat□o□ Meas□re□e□t Lo□at□o□s-Tw□ T□r□o Sta□e

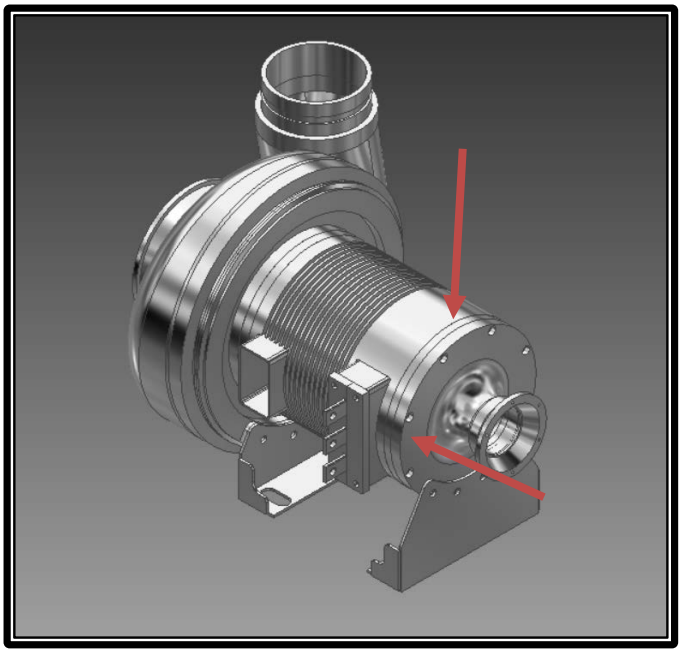

F□□re □.□: □□rat□o□ Meas□re□ e□t Lo□at□o□s-S□□le T□r□o Sta□e

8.0 So□□d Meas□re□e□t □ro□ed□re:

8.□ T□e so□□d □eter □sed □or □eas□re□e□ts is a R□o□ □odel □□-□□.

8.□ Meas□re□e□t lo□ato□s are 3 □t. □ro□ t□e □oor a□d 3 □t. awa□ o□ all □o□r s□des o□ t□e □a□□a□e a□d 3 □t. □ro□ t□e d□s□□ar□e □o□□e□to□ o□ t□e to□ o□ t□e □a□□a□e as s□ow□ □□ t□e □□□re □elow.

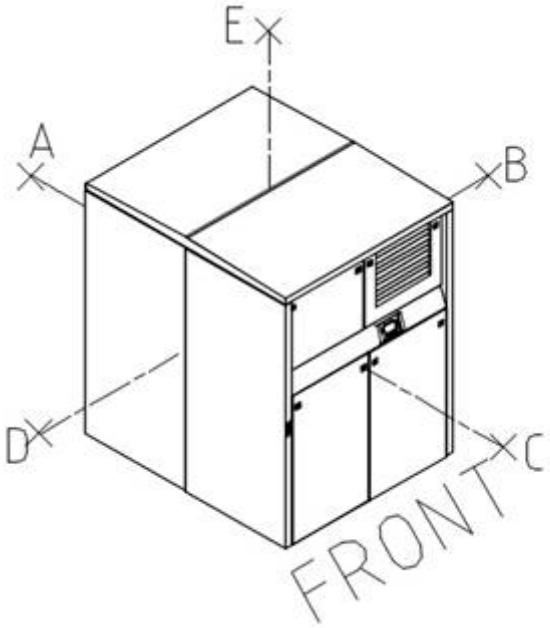

F□□re 8.□ So□□d Meas□re□e□t Lo□ato□s

8.3 T□e a□era□e so□□d □ress□re le□el is re□orded □ dBA □or ea□□ □eas□re□e□t lo□ato□ a□d o□erat□□□ □o□□t. So□□d □eas□re□e□ts are re□orded d□r□□□ □er□or□ a□□e test□□□ at ea□□ o□ t□e □ro□e□t o□erat□□□ □o□□ts a□d t□e □odel des□□□ □o□□t.

8.4 T□e lo□ar□t□□ □□ a□era□e is □al□□lated □or ea□□ set o□ read□□□s. T□e □□□□est o□ t□ese a□era□es is □sed to □o□□ert t□e so□□d □eas□re□e□t to e□□□□ale□t □ree □eld □o□d□t□o□s a□□o□□t□□□ □or t□e test roo□ d□□e□s□o□s a□d so□□d a□sor□t□o□ □ro□ert□es a□d t□e □a□□a□e e□□los□re d□□e□s□o□s.

8.□ Re□ere□□e sa□ □le re□ord□□□ s□eet □□ t□e a□□e□d□□.

□.0 Test □erso□□el: □a□□ test wi□ □e □o□d□□ted □□ a □□al□□ed test te□□□□□a□ a□d o□erseer □□ a □□al□□ed test e□□□□eer. □□sto□er wit□essed tests are a□a□la□le.

A□□e□d□:

A.□: Sa□ □le Re□ord□□□ s□eet □or □□□□t□o□al □□e□□s.

	Aerzen USA Corporation □08 □□de□e□de□□e Wa□ □ □oates□□lle□□A □□3□0 Tel: □6□0□380-0□44 Fa□: □6□0□380-0□□8 Ser□□□e □otl□□e □800□444-□6□□ e-□a□:Aer□e□□ Aer□e□□SA.□o□ we□s□te www.aer□e□□sa.□o□	TURBO Functional Test	
		DATE	Document #
AERZEN		03/05/2018	T-6-0315rev-I

Aerzen Job #	
Customer	
Aerzen Model #	**TB 075 - 0.6S**
Blower Serial #	

Item				Checked By
Description	**Code**			
□□ta□e Fi□ter □lo□ □D□□□	War□□□□□□0□□	Fa□lt□□0□□		**MP**
D□s□□ar□e Te□ □erat□re □T□□	War□□□□□□0□□	□.A.		**MP**
□□ta□e Te□ □erat□re □T□□	War□□□□□□03□	Fa□lt□□□□□		**MP**
D□s□□ar□e □□□□ □ress□re □□	War□□□□□□04□	Fa□lt□□0□□		**MP**
Motor O□er S□eed	War□□□□□□0□□	Fa□lt□□0□□		**MP**
S□r□e L□□e War□□□□/□a□lt	War□□□□□□06□	Fa□lt□□□4□		**MP**
O□er□eat L□□e T□r□dow□	□.A.	□.A.		**MP**
Motor Te□ □ □□□□	War□□□□□□□6□	Fa□lt□□38□		**MP**
Fa□ Motor Te□ □ □□□□	War□□□□□□□□□	Fa□lt□□4□□		**MP**
□□er□e□□□ Sto□	Fa□lt□□36□			**MP**

Final Remarks

Aerzen USA Test Technician Name

A.□: Sa□ □le Re□ord□□□ s□eet □or □□□rat□o□ □eas□re□ e□ts.

AERZEN	Aerzen USA Corporation 108 Independence Way – Coatesville, PA 19320 Tel: (610) 380-0244 Fax: (610) 380-0278 Service Hotline (800) 444-1692 e-mail:Aerzen@AerzenUSA.com website www.aerzenusa.com	Turbo Vibration Test	
		DATE	Document #
		03/05/2018	T-6-0315rev-I

Aerzen Job #	
Customer	
Aerzen Model #	TB 075 - 0.6S
Blower Serial #	

All measurements are in mm/sec RMS			Y-axis top motor		Z-axis right motor side	
Design Point		mm / sec		mm / sec		mm / sec
Test Point # 1		mm / sec	0.28	mm / sec	0.49	mm / sec
Test Point # 2		mm / sec	0.29	mm / sec	0.56	mm / sec
Test Point # 3		mm / sec	0.25	mm / sec	0.88	mm / sec
Test Point # 4		mm / sec	0.38	mm / sec	1.11	mm / sec

Aerzen USA Inspector Name _____

A.3: Sa□ □le Re□ord□□□ s□eet □or so□□d □ress□re le□el □eas□re□ e□ts.

AERZEN	**Aerzen USA Corporation** □08 □□de□e□de□□e Wa□ □ □oates□□lle□□A □□3□0 Tel: □6□0□380-0□44 Fa□ □6□0□380-0□□8 Ser□□□e □otl□□e □800□444-□6□□ e-□a1□Aer□e□□ Aer□e□□SA.□o□ we□s□te www.aer□e□□sa.□o□	**TURBO Sound Level Test** **DATE** / **Document #** **03/05/2018** / **T-6-0315rev-I**

Aerzen Job #	
Customer	
Aerzen Model #	**TB 075 - 0.6S**
Blower Serial #	

	A		B		□		D		□	
□re-r□□ □a□□□ro□□d □o□se	0.0	dBA	0.0	dBA	0.0	dBA	0.0	dBA	0.0	dBA
R□□□□□□ □o□se le□el □dBA□T.□. □□	8□.□	dBA	80.8	dBA	84.0	dBA	8□.0	dBA	86.4	dBA
R□□□□□□ □o□se le□el □dBA□T.□. □□	83.6	dBA	84.□	dBA	8□.8	dBA	83.□	dBA	86.□	dBA
R□□□□□□ □o□se le□el □dBA□T.□. □3	84.8	dBA	8□.3	dBA	86.8	dBA	86.4	dBA	8□.□	dBA
R□□□□□□ □o□se le□el □dBA□T.□. □4	86.8	dBA	8□.□	dBA	88.6	dBA	86.□	dBA	□□.□	dBA
□ost-r□□ □a□□□ro□□d □o□se	0.0	dBA	0.0	dBA	0.0	dBA	0.0	dBA	0.0	dBA

□al□□lated □ee □eld □al□e □ased o□ □□□□est re□orded □al□e dBA□d□r□□□ test□□□	□□.48
□ □ara□teed □ee□eld □a□□□er□ □o□se le□el to □□sto□er □/-□dB	

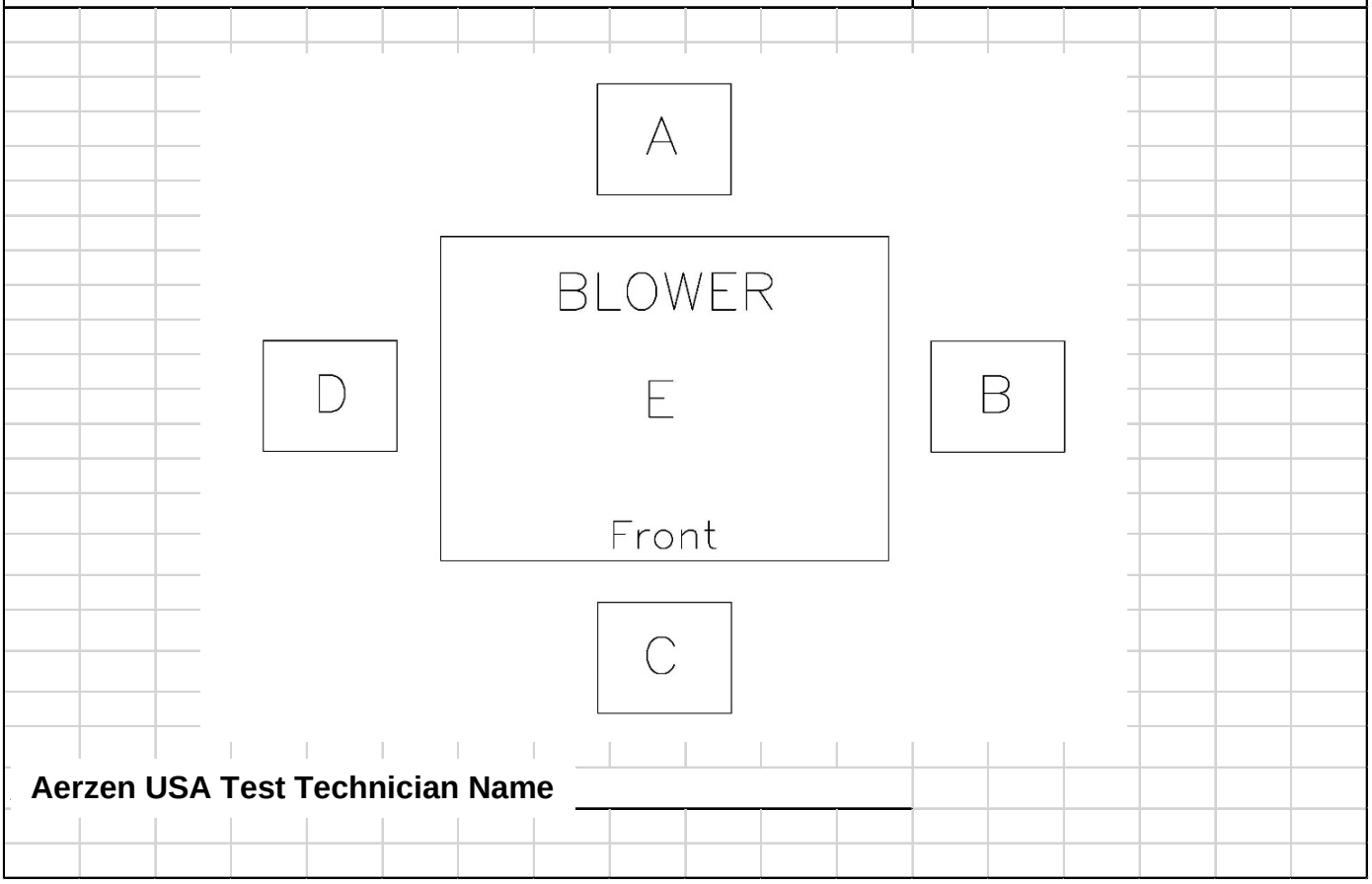

Aerzen USA Test Technician Name _____

SECTION 9

	Aerzen USA Corporation 108 Independence Way – Coatesville, PA 19320 Tel: (610) 380-0244 Fax: (610) 380-0278 Service Hotline (800) 444-1692	Pre-Commissioning Checklist	
		DATE	Document #
			T-7-268 rev F

The purpose of this sheet is to assure that both the end user and Aerzen USA are completely ready to comission a new project. Prior to commissioning, the customer is responsible for having all equipment wired, pipework connected, and customer electrical requirements completed. Upon confirmation that all on-site preparations have been made, Aerzen USA will release a service technician for comissioning.

Below is a checklist of items requiring attention prior to our arrival. Please check the boxes corresponding each requirement. Once all tasks have been completed, please send this checklist to your Aerzen Service Coordinator.

		Answer
1) Machine installed in permanent position and leveled		
2) Customer process pipework connected to Turbo Blower and permanently properly supported with shipping bolts removed.		
3) Unit(s) must be piped into system water or process comparable to operating conditions		
a) If a diffuser test is required, this would be done prior to actual startup on separate trip using pre-paid funds		
b) If a diffuser test is required, testing personell must be present the same day as the Aerzen Representive		
4) All Customer electrical connections made, power as well as control:	Power Available?	
a) Aerzen Turbo Technician will power machine upon start-up		
b) Power is a 480VAC **wye** connection to the supplied breaker on the turbo		
5) Any required personel scheduled to attend startup (electrician,integration, etc)		
6) Proper paperwork completed to allow Aerzen technician on the site		
7) If using ducted inlet, all piping is secured and free standing with gaskets in place.		
a) When ducted inlet is used piping is properly sized with filtration for 5 microns at 98%		
See manual for machine requirements (varies machine to machine)		
8) Filter housing is safely mounted and unaffected by elements/ weather conditions		
9) If I-air Remote is installed on package confirm type of network connection(Lan or Cell phone)		
a) If Lan connection to the I-air is used will Aerzen be allowed remote access at all times?	Yes/No?	
b) If Lan connection to the I-air remote is used what are access requirements(i.e. password,sign-in)?		

10) if Blower will connect to SCADA Network via Lan(cat 5/6 cables) supply the following

Blower IP 1 address		Blower 2 IP address		Blower IP 4 address	
I-air Remote IP(if applicable)		I-air Remote IP(if applicable)		I-air Remote IP(if applicable)	
Subnet address		Blower IP 3 address		Blower IP 5 address	
Default gateway(if applicable)		I-air Remote IP(if applicable)		I-air Remote IP(if applicable)	
Peer IP(modbus only)				Attach additional sheets if necessary	

11) Keep all access tags intact and do not try to access motor compartments

12) If required, special training requirements (safety) for Aerzen scheduled in advance
(Customer to advise type , length and place of training required.)

Company: _____

Project number: _____

Machine type/ serial number: _____

Date requested for startup: _____

I certify that I understand the information present on this document and is complete to the best of my knowledge. Please contact Aerzen USA if anything is unclear, prior to completion of this document. Should preparations not have been made upon arrival, Aerzen USA reserves the right to charge any and all responsible parties for additional time required on site prior to comissioning.

Company Representative name(print): _____

Company Representative Signature: _____ **Date:** _____

Aerzen USA Corporation
108 Independence Way
Coatesville, PA 19320
Phone: (610) 380-0244
Fax: (610) 380-0278
WWW.AERZENUSA.COM

Aerzen USA-Turbo Startup Report

1.0 Machine data

Date:	
Customer:	
Service Technician:	
Order # / SEO #:	
Serial #:	
Model:	
Turbo Blower ID:	
Operating hours total-Start [h]	
Operating hours total-End [h]	

1.0 Inspections

	OK	Not OK*		OK	Not OK*
Sound Enclosure Aesthetics			Input breaker type and capacity correct		
Unit has adaquate distance from walls and other machines			Control power transformer properly sized and rated		
Package is level and placed on level surface			I/O and CPU status		
Turbo room ventilation adequate			Control and drive board status		
Motor is level, has axial and radial play			E-stop operational/shut trip		
Verify alignment of motor and seals			Controller status		
Expansion joints/flex connectors			BOV and Motor cooling secure		
Verify package is grounded			Motor rotates in proper direction		
All fasteners are secure			Control wiring and relays secure		
Verify gap on flex restraining bolts			Discharge air line in process or vented		
Exhaust air line is flexible and properly sized(if equipped)			Check entire process piping path to the termination point, ensuring unit will not dead head		
Inlet air filter in place, clean, and housing tightened			Flex, check valve, and gate/butterfly valve are present and in order		
AC Input voltage is clockwise and within spec			Recheck and tighten connections on harmonic filters		
Verify all Clamps and fittings secure			Validate any customer added safety devices		
Process piping is properly supported					

*NOT OK, reason why. Correction needed:

2.0 Start-up

Set Altitude meters

2.1 Unloaded

AC input Voltage **L1** VAC **L2** VAC **L3** VAC

Item	Data	Item	Data	Notes:
Delta Pfilter	psi	T1	F	
P	psig	T2	F	
Q	cfm	n	rpm	
Runtime	hrs	Power	kW	
DCLink	V			

Aerzen USA Corporation
108 Independence Way
Coatesville, PA 19320
Phone: (610) 380-0244
Fax: (610) 380-0278
WWW.AERZENUSA.COM

Aerzen USA-Turbo Startup Report

2.2 BOV Operation

	Switch Point	BOV/Shutdown Triggered Y/N?	Notes:
Discharge Pressure High (psi)			
Discharge Pressure Low (psi)			
Discharge Pressure (psi)			
Time till close BOV (psi)			
Discharge Temperature (°F)			
Intake Temperature (°F)			

2.3 Loaded Operation

SV(%)

Item	Data		Item	Data		Notes:
Delta Pfilter		psi	T1		F	
P		psig	T2		F	
Q		cfm	n		rpm	
Runtime		hrs	Power		kW	
DCLink		V				

SV(%)

Item	Data		Item	Data		Notes:
Delta Pfilter		psi	T1		F	
P		psig	T2		F	
Q		cfm	n		rpm	
Runtime		hrs	Power		kW	
DCLink		V				

SV(%)

Item	Data		Item	Data		Notes:
Delta Pfilter		psi	T1		F	
P		psig	T2		F	
Q		cfm	n		rpm	
Runtime		hrs	Power		kW	
DCLink		V				

SV(%)

Item	Data		Item	Data		Notes:
Delta Pfilter		psi	T1		F	
P		psig	T2		F	
Q		cfm	n		rpm	
Runtime		hrs	Power		kW	
DCLink		V				

3.0 Functional Testing

	OK	Not OK	Notes:
Abnormal noise or smell?			
Room Temperature maintained below 104F(40C)			
Recheck Inlet Voltage at MCB			
Transformer Temperature			
LCD Status			
E-Stop and shunt trip operational			
Smooth running			
Motor cooling			
Inverter Cooling			

Aerzen USA Corporation
108 Independence Way
Coatesville, PA 19320
Phone: (610) 380-0244
Fax: (610) 380-0278
WWW.AERZENUSA.COM

Aerzen USA-Turbo Startup Report

4.0 Technical data

Elapsed Run Time (hours):	0:15	1:00	2:00	3:00	4:00	**Notes:**
Delta Pfilter						
Discharge Pressure						
Q						
DCLink						
Ambient Temperature						
Discharge Temperature						
N(rpm)						
Power						
SV(%)						

5.0 Data Sheet

Discharge Pressure		Impeller type	Back Swept
Motor Type	PM Motor	Operation Mode	
Rated Shaft Power (kW)		LCD Type	
Rated voltage and Current		LCD S/W version	
Rated Output		Controller S/W version	
Motor Driver	VFD (VSD)	I/0 Communication type	
Motor Access Tag #		Max RPM	
Inverter Access Tag #		Input voltage protection	

6.0 Notes/Summary

7.0 Photographs

SECTION 10

SECTION 43 11 20
AIR FOIL BEARING TURBO BLOWERS

DIVISION 43 00 00 – PROCESS GAS AND LIQUID HANDLING EQUIPMENT

PART 1 GENERAL

1.01 WORK INCLUDED

A. This section covers the work necessary to furnish and install, complete, the air foil bearing turbo blower and accessories specified herein. It is the intent of this specification that a complete system be furnished, installed, and coordinated with relocation/installation of two identical existing turbo blowers.

1.02 EQUIPMENT NUMBER

A. B-1-3

1.03 GENERAL

A. The manufacturer shall have the sole responsibility for the proper functioning and coordination of the equipment as furnished.

B. See the GENERAL CONDITIONS and Division 01 00 00, GENERAL REQUIREMENTS, which contain information and requirements that apply to the work specified herein and are mandatory for this project.

1.04 MANUFACTURER’S SERVICES

A. See Section 01 66 40, MANUFACTURER'S SERVICES in Division 01 00 00, GENERAL REQUIREMENTS.

B. The blower manufacturer shall provide the services of a qualified representative at the jobsite for equipment installation assistance, inspection and certification of the installation, equipment testing, startup assistance, and training of Owner’s personnel.

C. The manufacturer’s representative for the equipment specified herein shall be present at the jobsite and/or classroom designated by the Owner for the minimum person-days listed for the services hereinunder, travel time excluded:

1. Two person-days for installation assistance, inspection, certification of the installation, functional testing, performance testing, pre-startup classroom or jobsite training, and startup assistance.

D. Startup services and training of Owner’s personnel shall be at such times as requested by the Owner.

E. At completion of the blower installation, the manufacturer's representative shall issue certificates showing:

1. Condition of blower upon unpacking at jobsite.

2. That the handling of blower equipment was satisfactory to the manufacturer.

3. The installation is as specified and is acceptable to the manufacturer.

F. A qualified manufacturer's representative shall be one who has had at least two years' experience in the installation of the types of blowers specified.

1.05 SUBMITTALS

A. Submittals shall be made as required in Section 01 33 00, SUBMITTALS in Division 01 00 00, GENERAL REQUIREMENTS. In addition, the information summarized below shall be provided.

B. Shop Drawings shall include performance data curves showing pressure, capacity, horsepower demand, and blower efficiency over the entire operating range of the blower, from shutoff to maximum capacity. The equipment manufacturer shall indicate separately the pressure, capacity, horsepower demand, and overall efficiency at the guarantee point.

C. Complete specifications, descriptive literature, dimensional drawings, assembly cuts, mounting details, and materials of construction for all equipment and devices to be furnished under this specification section.

D. Make, model, and weights for all blowers, mounting base plates, sound attenuating enclosures, drives, motors, and appurtenances.

E. Motor manufacturers' guaranteed power factor and minimum efficiencies at 1/4, ½, 3/4, and full load.

F. Complete connection and instrumentation diagrams.

G. Anchor bolt sizes and lengths.

H. Proposed factory and field test descriptions in sufficient detail to fully describe the specific tests to be conducted and quantities to be measured to demonstrate full conformance with these Specifications.

I. A complete set of manufacturer's instructions covering storage, installation, operation, lubrication, and maintenance shall be available at the jobsite no later than the date the blowers are received. This requirement is in addition

to operation and maintenance manuals as specified in Section 01 77 00, CONTRACT CLOSEOUT.

J. Certified copy of test report for identical motor tested in accordance with NEMA MG 1-12.53a and IEEE Standard 112, Test Method B, showing full load efficiency not less than specified value; motors not as specified will be rejected.

K. Motor Tests and Test Reports:

1. Short commercial tests shall be made, including no-load current at rated voltage, high potential, and locked rotor current.

2. Copies of test reports for actual motor being provided.

L. Motor Data Sheets:

1. Complete motor rating and list of special motor features being provided.

1.06 ELECTRICAL AND CONTROLS

A. Electrical power will be provided under Division 26 00 00, ELECTRICAL.

B. Controls will be provided under the applicable instrumentation and control sections in Division 40 00 00, PROCESS INTERCONNECTIONS.

1.07 OPERATION AND MAINTENANCE MANUALS

A. Operation and Maintenance (O&M) Manuals and Equipment Maintenance Summary Sheets for the equipment specified herein shall be furnished as specified in Section 01 77 00, CONTRACT CLOSEOUT. Submit information from the blower manufacturer and the motor manufacturer.

B. The O&M manuals shall contain, at a minimum, full descriptions of all equipment specified herein, motor data, spare parts lists, and detailed instructions for all operation and maintenance tasks to be performed by the operator.

C. A spare manual shall be shipped with the equipment in order to allow for proper installation and operation of the equipment prior to the release of all final installation, operation, and maintenance manuals.

1.08 WARRANTY

A. The blower system manufacturer shall warrant to the Owner that the bare blowers furnished will be free from defects in materials and workmanship for a period of (30) thirty months from the date of shipment or (24) twenty four months from the start-up. All other package components shall be warranted for a period of a minimum of (18) eighteen months from shipment or (12) twelve months from start-up, whichever occurs first. In the event of material or workmanship failure, the manufacturer shall either repair or replace the damaged or defective components or services or refund payments to Owner for the components or services found to be defective.

B. This warranty shall not be encumbered nor limited by the number of hours of equipment operation time. Warranties that restrict coverage to operating conditions or limitations on hours of operation time are not acceptable.

PART 2 PRODUCTS

2.01 GENERAL

A. The Contractor shall supply one Aerzen turbo blower of the same model and size as the two existing turbo blowers. Information on the existing blowers is attached to Section 43 05 50, RELOCATION OF EXISTING BLOWERS.

B. Electrical and controls materials and workmanship required to complete the work under this section shall also conform to the applicable requirements of Division 26 00 00, ELECTRICAL.

2.02 BLOWER MANUFACTURER AND MODEL

A. Aerzen Turbo Blower Model AT200-1.0S G5plus

2.03 APPURTENANCES AND ACCESSORIES

A. Appurtenances and accessories including but not limited to motor, enclosure, filter, valves, connectors, silencers, drive and control panel, shall match the scope of supply shown in the appendix to Section 43 05 50, RELOCATION OF EXISTING BLOWERS as applicable for one blower.

B. A remote filter unit will not be required.

2.04 SPARE PARTS

A. Provide manufacturer-recommended spare parts.

B. Spare parts shall be suitably marked for identification and packed in a single hinge covered box.

PART 3 EXECUTION

3.01 PREPARATION FOR SHIPMENT, SHIPMENT, AND PROTECTION

A. Equipment shall be prepared and protected for shipment and shipped in accordance with the requirements of Section 01 66 00, PRODUCT SHIPMENT, HANDLING, STORAGE, AND PROTECTION of Division 01 00 00, GENERAL REQUIREMENTS. In addition, the following shall be done:

1. After testing and before dismantling for shipment, all wiring and mechanical connections shall be matchmarked or tagged to ensure proper field assembly.

2. The Contractor shall make arrangements for extra protection until final installation if units are to be stored outside.

B. Insofar as is practical, the equipment specified herein shall be factory assembled. The parts and assemblies that are of necessity shipped unassembled shall be packaged and tagged in a manner that will protect the equipment from damage and facilitate the final assembly in the field.

3.02 GENERAL

A. Care during storage and procedures for installation and startup of the blowers and motors shall be in strict conformance with the manufacturer's instructions.

3.03 BLOWER INSTALLATION

A. Install the blowers and accessories in accordance with the blower manufacturer's directions, the Drawings, and these Specifications. The installation shall be supervised by a manufacturer's representative and shall be approved by this representative prior to operating the blowers.

B. Handle carefully and protect the blowers and appurtenances to avoid damaging the equipment. Bases shall be installed true and level on the concrete pads provided in accordance with the details shown on the Drawings. Level bases by means of shims or levelling nuts, and then grout in place with a pourable or tamped-in grout as specified in Section 03 30 00, CONCRETE.

C. Install the blowers so that connection may be made to the discharge headers without any springing or otherwise forcing either the blower or the header. Adjust blower assemblies such that the units are properly aligned, plumb, and level. Carefully fit and coat all bolt threads with lubricant to facilitate future removal.

D. All strain from attached piping shall be eliminated from the blowers. Any evidence of blower misalignment, unusually noisy operation, or other signs of improper setting shall be corrected by the Contractor.

E. The equipment shall be provided with all necessary factory lubrication. Before initial startup at final installation, lubrication for all bearings, etc. shall be checked in accordance with the blower and/or motor manufacturer's recommendations.

F. All final electrical connections shall be made by the Electrical Sub-contractor.

3.04 FACTORY TESTS

A. Blowers: A factory test certified by the blower manufacturer shall be performed on the blower actually furnished, and written notice of the same shall be furnished to the Engineer. Test data shall be furnished to show conformance to the specified performance.

B. Motor Tests and Test Reports:

1. Short commercial tests shall be made, including no-load current at rated voltage, high potential, and locked rotor current.

2. Certified copies of test reports for the motor shall be provided Engineer for review.

3.05 FIELD TESTS

A. Functional Testing: Prior to plant or blower system startup, all equipment described herein shall be inspected for proper alignment, proper operation, proper connection, proper power draw, and satisfactory performance by means of a functional test.

B. Performance Testing:

1. The Contractor, with the assistance of the blower manufacturer's representative, shall perform field performance tests on all of the blower assemblies to demonstrate their conformance to the Specifications to the satisfaction of the Engineer. A test log shall be

presented to the Engineer upon the completion of each test that records the following:

2. The Manufacturer shall perform a physical check of the blower installation, perform safety checks, power up the equipment and perform functional testing.

3. The functional test shall consist of 4 hours of operation of the blower with vibration, temperature, and pressure readings as well as motor amp readings taken and recorded at 60-minute intervals. In addition, the following shall be logged:

    a. Air flow, as measured by plant instrumentation and/or manufacturer provided instruments for at least three different blower speeds.
    b. Blower discharge pressures as measured by calibrated gauges provided with the units for at least three different blower speeds.
    c. Blower discharge temperatures as measured by calibrated gauges provided with the units for at least three different blower speeds.
    d. Driving motor voltage and amperage measured for each phase for at least three different blower speeds.

4. Units failing to meet the Specifications to the satisfaction of the Engineer must be replaced or more accurately tested. If the blower fails the second test, the unit will be rejected, and the Contractor shall furnish a unit that will perform as specified. Testing and blower replacement shall be accomplished at no additional cost to the Owner.

3.06 MANUFACTURER'S CERTIFICATE(S)

A. Provide manufacturer's certificate(s) in accordance with Section 01 66 40, MANUFACTURERS' SERVICES of Division 01 00 00, GENERAL REQUIREMENTS.

B. Submit the following items:

1. Manufacturers' Certification of Proper Installation certifying that the equipment; (1) has been properly installed and lubricated; (2) is in accurate alignment; (3) is free from any undue stress imposed by connecting piping or anchor bolts; and (4) is in compliance with any conditions listed herein.

2. Functional Test Certification.

3. Performance Test Reports.

END OF SECTION 43 20 10

SECTION 43 11 33
ROTARY LOBE BLOWERS

DIVISION 43 00 00 – PROCESS GAS AND LIQUID HANDLING EQUIPMENT

PART 1 GENERAL

1.01 WORK INCLUDED

A. This section covers the work necessary to furnish and install, complete, the package rotary lobe blowers and accessories specified herein. It is the intent of this specification that a complete system be furnished and installed. The blower manufacturer or supplier shall provide all blowers and other accessories, complete.

1.02 EQUIPMENT NUMBERS

A. B-2-1, B-2-4, B-2-5

1.03 GENERAL

A. Like items of equipment provided hereunder shall be the end product of the same manufacturer in order to achieve standardization of operation, maintenance, spare parts and manufacturer's services; and shall include all necessary appurtenances for a complete and working system. The equipment shall be the product of a manufacturer regularly engaged in the production of equipment for the specified use. The manufacturer shall have the sole responsibility for the proper functioning and coordination of the equipment as furnished.

B. See the GENERAL CONDITIONS and Division 01 00 00, GENERAL REQUIREMENTS, which contain information and requirements that apply to the work specified herein and are mandatory for this project.

1.04 MANUFACTURER’S SERVICES

A. See Section 01 66 40, MANUFACTURER'S SERVICES in Division 01 00 00, GENERAL REQUIREMENTS and the following:

B. The blower manufacturer shall provide the services of a qualified representative for the equipment specified at the jobsite for installation assistance, inspection and certification of the installation, equipment testing, startup assistance, and training of Owner’s personnel.

C. The manufacturer’s representative for the equipment specified herein shall be present at the jobsite and/or classroom designated by the Owner for the minimum person-days listed for the services hereinunder, travel time excluded:

1. Three person-days for installation assistance, inspection, certification of the installation, functional testing, performance testing, and startup assistance.

2. One person-day for pre-startup classroom and jobsite training.

D. Startup services and training of Owner's personnel shall be at such times as requested by the Owner.

E. At completion of the blower installation, the manufacturer's representative shall issue certificates showing:

1. Condition of blowers upon unpacking at jobsite.

2. That the handling of blower equipment was satisfactory to the manufacturer.

3. The installation is as specified and is acceptable to the manufacturer.

F. A qualified manufacturer's representative shall be one who has had at least two years' experience in the installation of the types of blowers specified.

1.05 SUBMITTALS

A. Submittals shall be made as required in Section 01 33 00, SUBMITTALS in Division 01 00 00, GENERAL REQUIREMENTS. In addition, the information summarized below shall be provided **for each blower model**.

B. Shop Drawings shall include performance data curves showing pressure, capacity, horsepower demand, and blower efficiency over the entire operating range of the blower, from shutoff to maximum capacity. The equipment manufacturer shall indicate separately the pressure, capacity, horsepower demand, and overall efficiency at the guarantee point.

C. Complete specifications, descriptive literature, dimensional drawings, assembly cuts, mounting details, and materials of construction for all equipment and devices to be furnished under this specification section.

D. Make, model, and weights for all blowers, mounting base plates, sound attenuating enclosures, drives, motors, and appurtenances.

E. Motor manufacturers' guaranteed power factor and minimum efficiencies at ¼, ½, ¾, and full load.

F. Complete connection and instrumentation diagrams.

G. Anchor bolt sizes and lengths.

H. Proposed factory and field test descriptions in sufficient detail to fully describe the specific tests to be conducted and quantities to be measured to demonstrate full conformance with these Specifications.

I. A complete set of manufacturer's instructions covering storage, installation, operation, and lubrication shall be available at the jobsite no later than the date the blowers are received. This requirement is in addition to operation and maintenance manuals as specified in Section 01 77 00, CONTRACT CLOSEOUT.

J. Certified copy of test report for identical motor tested in accordance with NEMA MG 1-12.53a and IEEE Standard 112, Test Method B, showing full load efficiency not less than specified value; motors not as specified will be rejected.

K. Motor Tests and Test Reports:

1. Short commercial tests shall be made, including no-load current at rated voltage, high potential, and locked rotor current.

2. Copies of test reports for actual motor being provided.

L. Motor Data Sheets:

1. Complete motor rating and list of special motor features being provided.

1.06 ELECTRICAL AND CONTROLS

A. Electrical power will be provided under Division 26 00 00, ELECTRICAL.

B. Controls will be provided as a combination of manufacturer-supplied local control panels and under the applicable instrumentation and control sections in Division 40 00 00, PROCESS INTERCONNECTIONS.

1.07 OPERATION AND MAINTENANCE MANUALS

A. Operation and Maintenance (O&M) Manuals and Equipment Maintenance Summary Sheets for the equipment specified herein shall be furnished as specified in Section 01 77 00, CONTRACT CLOSEOUT. Submit information from the blower manufacturer and the motor manufacturer.

B. The O&M manuals shall contain, at a minimum, full descriptions of all equipment specified herein, motor data, spare parts lists, and detailed

instructions for all operation and maintenance tasks to be performed by the operator.

C. A spare manual shall be shipped with the equipment in order to allow for proper installation and operation of the equipment prior to the release of all final installation, operation, and maintenance manuals.

1.08 WARRANTY

A. The blower system manufacturer shall warrant to the Owner that the bare blowers furnished will be free from defects in materials and workmanship for a period of (30) thirty months from the date of shipment or (24) twenty four months from the start-up.

B. All other package components shall be warranted for a period of a minimum of (18) eighteen months from shipment or (12) twelve months from start-up, whichever occurs first. In the event of material or workmanship failure, the manufacturer shall either repair or replace the damaged or defective components or services or refund payments to Owner for the components or services found to be defective.

C. This warranty shall not be encumbered nor limited by the number of hours of equipment operation time. Warranties that restrict coverage to operating conditions or limitations on hours of operation time are not acceptable.

PART 2 PRODUCTS

2.01 GENERAL

A. The named blower manufacturer and models were selected during design and no equal shall be allowed.

B. Electrical and controls materials and workmanship required to complete the work under this section shall also conform to the applicable requirements of Division 26 00 00, ELECTRICAL.

C. The blowers shall be electric motor driven rotary lobe type with accessories as described herein, arranged as generally shown on the Drawings. Each blower package shall be mounted on a common skid base complete with blower, intake filter, intake silencer, intake filter differential pressure gauge, motor, V-belt drive, flexible inlet and outlet connectors, inlet pressure gauge, discharge pressure gauge, discharge temperature gauge, discharge high temperature switch/transmitter, high oil temperature switch/transmitter, pressure relief valve, discharge silencer, and discharge check valve. The blower, motor, drive, and silencers shall be mounted on a common base and shall be enclosed in an acoustic enclosure.

2.02 BLOWER MANUFACTURER AND MODELS

A. Furnish two (2) Aerzen Delta Hybrid Model TBD.

B. Furnish one (1) Aerzen Delta Hybrid Model TBD.

2.03 SERVICE CONDITIONS

A. Blowers shall be designed for the following operating conditions:

1. Elevation: 500 ft
2. Ambient Pressure: 14.5 psi
3. Ambient (Room) Temperature Range: 60°F to 100°F
4. Intake Temperature Range: 28°F to 125°F
5. Relative Humidity: 90% @ 100°F; 70% @ 125°F

2.04 PERFORMANCE REQUIREMENTS

A. Blower packages shall have a maximum noise level rating 3 feet from the blower of 80 dBA at any frequency between 100 and 8,000 Hz.

B. Design Points:

1. Blower 1 (serving smaller digester basin)

a. Discharge Pressure: 5.5 psi – 6.75 psi
b. Airflow: 675 scfm – 1,125 scfm

2. Blowers 3 and 4 (serving the larger digester)

a. Discharge Pressure: 5.5 psi – 8.0 psi
b. Airflow: 1,100 scfm – 1,940 scfm
c. One of these blowers will also serve as a redundant unit to the smaller blowers.

2.05 BLOWER CONSTRUCTION DETAILS

A. Blower Casing:

1. The casing shall be of one-piece con¬struction, with separate sideplates that are bolted and pinned to the housing.

2. Casing materials shall be close-grained cast iron ASTM A48 suitably ribbed to prevent distortion under the specified operating conditions.

3. Inlet and outlet shall be flanged connections, not threaded.

4. Airflow shall be vertical top to bottom with inlet and outlet connections offset so that the flow travel horizontally across the blower stage. Casings that do not utilize a horizontal internal flow shall not be allowed.

5. The vibration level as measured at the casing, in the X/Y planes of the bearings, shall not exceed 0.3 “/ sec RMS when operating at the specified operating pressure and speed. The vibration level shall be checked at start-up and documented in the field start up report.

B. Rotors:

1. Each rotor (male and female) shall be of the “stiff” design with first lateral critical speed at least 120% of the maximum allowable operating speed.

2. The rotors shall operate without rubbing nor shall they require lubrication.

3. Rotors shall be drop forged in one single piece of AISI 1043 or equivalent, machined to final tolerance. Minimum material tensile strength shall be 620Mpa. Lesser precision cast iron rotors with surface coatings shall NOT be accepted.

4. Open rotors shall not be acceptable.

5. For maximum strength and reliability, the female rotor shall be driven by the drive motor and the male rotor shall be driven by the timing gear set. Stages that utilize a male driven rotor shall not be accepted.

6. A male and female rotor configuration with internal compression ratio and axial flow entry must be used to increase the adiabatic efficiency of the blower stage. Twisted rotor profiles applied for pulsation cancelation only shall not be allowed. Radial flow entry type rotors shall not be allowed

7. Only precision-machined rotors with sealing strips to optimize clearance and performance shall be accepted. Manufacturers using coated rotors are required to include the following additional services in their proposal, with a broken-out adder to their proposed cost:

a. For the first 5 years of service, the manufacturer (not the packager) will visit the site. Each machine will be shut down and visually inspected for evidence of degradation. Inspection will include clearance measurement with feeler gauges. An annual report will be submitted, including photographs, for each machine.
b. An annual performance test will be performed on site, including flow and power measurement, for each machine. The results will be compared to the original ISO-1217 test results for each machine, and a report submitted to the owner and the engineer.
c. Any sign of performance loss or coating degradation will be monitored. If the engineer or owner determine that the results pose a threat to the reliability of the aeration system over the first five years, the manufacturer will, at their own expense (including parts and labor) replace the designated compressor stage, or overhaul and recoat the existing stage, depending on the number of units affected by the degradation.

8. Rotors shall be statically and dynamically balanced per ISO1940/ANSI S2.19 G2.5.

C. Bearings:

1. Each rotor/shaft shall be supported by anti-friction bearings and fixed to control the axial location of the rotor/shaft in the unit.

2. Regardless of theoretical bearing life calculations, the bearings shall be sized for a minimum expected life of 5 years between overhauls.

3. The applied design conditions shall yield a bearing load and minimal L-10 bearing life calculation of 296,000 hrs. Calculated bearing life shall be submitted, based on specified operating conditions.

D. Timing Gears:

1. The rotors shall be timed by a pair of single helical gears with quality equivalent to AGMA 12. Spur cut gears shall not be acceptable.

2. Gears shall have hardened and ground teeth and a minimum AGMA service factor of 1.70.

3. Gears shall be mounted via hydraulic expansion onto the shafts with a tapered interference fit and secured by a locknut. Pinned gears shall not be acceptable.

E. Seals:

1. Seals shall be designed to prevent lubricant from leaking into the air stream as well as to prevent oil from leaking out of the machine.

2. The seal shall be a cartridge type consist of two rotary slip rings mounted in a retainer on the air end, an atmospheric air gap in the center with top and bottom ventilation and a noncontact labyrinth seal with no wearing parts on the oil end. Internal lip seals shall not be permitted.

3. The rotor input shaft shall have a noncontact labyrinth seal with no wearing parts.

F. Lubrication:

1. The timing gears and the bearings shall be oil lubri¬cated. Grease lubrication shall be not acceptable.

G. Oil Sight Glass:

1. An oil sight glass shall be provided on the exterior of the noise enclosure so the operator can easily view the oil level.

2. Sight glasses inside the enclosure or that cannot be easily viewed by the operator shall not be acceptable.

H. Painting:

1. Painting shall be per supplier's standard meeting the following criteria:

   a. Except for machined sealing and machined mounting surfaces, the package shall be painted dark blue.
   b. Aluminum, stainless steel, and brass shall not be painted.
   c. The supplied motor shall not be over sprayed and will be supplied with the motor manufacturer's standard protection and paint color.
   d. Painted Cast Iron and Carbon Steel shall be Alkyd Resin Primer and Final coat with a total dry film thickness of 70□m. Surface preparation SSPC10 or better.
   e. Sound enclosure shall be powder-coated polyester base total dry film thickness 80□m.
   f. Galvanized components shall only be painted with appropriate surface preparation

2.06 BLOWER ACCESSORIES

A. Inlet Filter / Silencer:

1. Each package shall be supplied with one combination inlet filter and silencer.

2. The inlet filter silencer shall be mounted directly to the inlet flange of the blower.

3. The filter media efficiency shall meet the requirements of ASHRAE 52.2 MERV7 50-70% @3-10 microns corresponding to EN779 G4.

4. The silencer portion shall be located upstream of the inlet filter.

5. The filter element shall be designed to trap dirt on the inside so that upon changing, dirt does not fall into the machinery. Filters where dirt accumulates on the external surface of the filter shall not be permitted.

6. Filter and silencer performance losses (clean element) shall be included in the entire package performance calculation.

B. Base Frame / Discharge Silencer:

1. Each package shall be supplied with one combination base frame / discharge silencer.

2. The silencer shall be a chamber type design for maximum sound attenuation and shall not use internally any absorption materials of any kind (fibrous or otherwise). Internal absorption material has been shown to degrade, reduce the attenuation quality of the silencer, and internally foul diffusers. Silencers that utilize internal absorption material shall not be permitted.

3. The silencer shall be fabricated of a single shell of pressure vessel quality steel with continuous welds.

4. The silencer must be subject to a pressure test for tightness and strength at a minimum of 1.65 times the maximum design pressure.

5. The silencer shall have a machined flanged inlet connection and bolt directly to the discharge flange of the rotary lobe compressor, with no intermediary or interconnecting pieces. Threaded connection between the compressor stage and the discharge silencer is subject to leakage and misalignment and shall not be permitted.

6. Discharge silencer performance losses shall be included in the entire package pressure calculation. Blower accessories shall be supplied by the manufacturer of the blower stage.

7. The base frame shall be constructed from welded carbon steel that shall be designed to maintain alignment of the blower internal components and the drive during operation.

8. The base frame shall be designed to resist distortion while being installed on vibration isolating mounts.

9. The manufacturer shall supply a stainless-steel grounding lug fully welded to the base.

C. Flexible Connectors:

1. Each package shall be provided with a flexible ANSI style discharge connector and upstream of the inlet silencer.

2. Flexible connectors shall prevent the transmission of noise and vibrations from the blower package into the piping.

3. Flexible discharge connectors shall be Proco Style 240, Type EE, EPDM, with a standard ANSI flange discharge connection, rated for 300 °F at 20 psig. Soft face range with galvanized split ring reinforcement.

4. Flexible inlet connectors shall be a reinforced silicone sleeve secured by four (4) stainless steel clamps and terminating with a standard epoxy coated steel ANSI flange connection.

D. Electric Motor:

1. Each package shall be supplied with a WEG manufactured TEFC NEMA Premium Efficiency motor that shall operate on 460 Volts, 3 Phase, 60 Hertz current, 3600 RPM. Operation of motors above 60 Hertz shall not be allowed under any circumstance.

2. Motors shall be horizontal, foot mounted, rigid base, Torque NEMA B, Temperature rise Class B, TEFC IP55, watertight and dust tight enclosure.

3. Class F, inverter rated insulation, Class H applied varnish, 3:1 constant torque VFD-duty.

4. Regreasable bearings, positive pressure lubrication system with automatic drawn plugs – pressure compensated (frame sizes 254T and larger).

5. All frame sizes shall be domestic NEMA standard frame sizes, suitable for overhung belt drive and with the conduit box on top of the motor. IEC frame motors shall not be allowed.

6. The motor will be mounted on a pivoting base to provide automatic tensioning of the belts. The motor nominal rating after any corrections for ambient conditions shall be 10% above the maximum operating horsepower.

7. The motor shall have a 1.25 service factor for sizes up to 100 HP and a 1.15 service factor for sizes above 100 HP.

8. Motor windings shall be supplied with a normally closed thermostat, one per phase, wired in series to form a fail-safe motor protection circuit for the external fault circuit of the motor controller on all frame sizes at or above 324T. Thermostat shall be a Klixon Precision Thermostat by Sensata Technologies.

9. Motors shall be equipped with an Aegis ring.

10. Blower manufacturer shall be responsible for coordinating the starting torque requirement of the blower and the motor.

11. The use of the TEFC motor to cool the blower system or circulate the enclosure air shall not be allowed.

12. Regardless of VFD supply, the manufacturer shall publish the VFD program settings in the submittal documentation to verify operation is within the intended RPM range of the motor.

13. Under no circumstances shall operation above 60Hz be permitted to achieve the required flow rate. Motor operation shall be limited to a maximum of 60Hz by the motor controller.

E. V-Belt Drive:

1. Each package shall be supplied with a V-belt drive that shall be of the high-capacity type, oil, and heat resistant.

2. Drive shall be designed for a minimum service factor of 1.4 times operating power (bHp), or 1.1 times the motor nameplate Hp,

whichever is larger to allow a minimum of 1.4-service factor based on the maximum blower bHp.

3. Belt tensioning shall be automatic without the use of any spring devices or interaction on the part of the operator. Slide rails or spring tensioners shall not be used as a tensioning device.

4. Sheaves shall be dynamically balanced regardless of the operating speed and hydraulically mounted on the compressor drive shaft.

5. The automatic tensioning system shall yield a v-belt life of 16,000 hrs of operation.

F. Belt Guard:

1. The belt drive shall be guarded in compliance with OSHA regulations.

2. Portions of the guard shall be easily removable allowing for belt inspection and replacement.

3. Guard material shall be perforated galvanized carbon steel.

G. Vibration Isolators:

1. Each package shall be supplied with vibration isolating feet with a minimum efficiency of 80%.

2. The manufacturer shall be responsible for attenuating noise and vibration in the package such that no special installation base shall be required, nor shall any additional measures be required to reduce vibrations from the package being transmitted to the base or the piping.

H. Pressure Safety Valve:

1. Each package shall be supplied with a single pressure safety valve on the discharge side of the blower mounted downstream of the discharge silencer and upstream of the check valve.

2. The safety valve shall be set to protect the machine from exceeding its maximum pressure rating and shall be sized to pass 100% of the design flow.

3. The valve shall be field adjustable, spring loaded, and have a certificate of conformity to PED if operating above 15 psig.

4. The pressure safety valve shall be housed inside and attenuated by the sound enclosure. The safety valve shall relieve hot air into a segmented and sealed section of the sound enclosure so that the hot air cannot reenter the inlet of the machine. Weighted relief valves inside the enclosure shall not be permitted. Diaphragm electronically actuated relief valves shall not be permitted.

5. The valve shall be manufactured by Aerzen.

I. Check Valve:

1. Each package shall be supplied with one check valve that shall be installed on the discharge line.

2. The check valve shall be of the full-bore low pressure-drop, flapper type design with a steel body, and steel flap embedded in EPDM with full-contact seal. Applications with a continuous discharge temperature of greater than 285°F will require the steel flap embedded in Silicone with a full-contract seal.

3. The valve shall be easily removable without disturbing the piping. Check valves requiring installation in the discharge piping shall not be considered unless installation cost of the external valve is included in supplier's proposal.

4. Pressure losses produced by the check valve shall be included in the entire package performance calculation.

5. The check valve shall be manufactured by Aerzen.

J. Anchor Bolts: Provide Type 316 stainless steel anchor bolts as recommended by blower manufacturer for mounting blower baseplates.

K. Lifting lugs shall be provided for blower and any other equipment or items weighing over 100 pounds.

2.07 INSTRUMENTATION

A. Monitoring Sensors for each blower:

1. Inlet Pressure Transducer

2. Discharge Pressure Transducer

3. PT 1,000 Discharge Temperature RTD

4. PT 1,000 Oil Temperature RTD

2.08 ACOUSTICAL ENCLOSURES

A. Each package shall be supplied with a sound enclosure covering the entire blower package.

B. The enclosure shall provide suitable protection for outdoor installation under wind loads of 50mph and snow loads of 25lbs/ft2.

C. The enclosure shall be designed so as to be able to install them side-by-side with all maintenance done from the front or back of the package.

D. Details shall be as follows:

1. Enclosure Panels shall be made of galvanized steel sheet, powder coated in a light reflecting, blue color per RAL 5001. The skid shall be of the same color.

2. The enclosure and the blower package shall both be mounted on a skid / oil-drip pan designed for meeting environment protection standards and for easy transportation and installation.

3. A grounding strap shall be installed between the blower base and the package skid to bypass any vibration isolating mounts for grounding continuity.

4. Quick release panels, each less than 50 lb (as mandated by MSHA) must provide easy and quick access for routine maintenance of the blower and the package components.

5. Enclosure Cooling / Ventilation Fan:

a. Ventilation fan shall be provided for cooling the sound enclosure.
b. The fan shall be sized for sufficient heat removal from the sound enclosure, even when the blower is operated with a VFD.
c. The cooling fan shall be driven separately by a 460V, 3Ph, 60Hz electric motor powered by the same 460 VAC electric feed as the local control panel. A 120V single phase motor for this application will not be acceptable as the current draw and motor operating temperature are too high.
d. The enclosure cooling fan shall be a dedicated device. The use of the TEFC drive motor to cool the blower or circulate the sound enclosure shall not be allowed.

6. To prevent possible operator damage, electrical components, instrumentation, and instrument connections shall not be mounted or interface with moving panels of the sound enclosure.

7. Both blower oil sumps shall be piped to a common fill and drain, located at the front of the package for easy maintenance. An oil level indicator shall be mounted on the outside of the enclosure, which gives an accurate oil level indication while the blower is in operation. All oil lines shall be industrial-quality hydraulic hose and fittings.

2.09 SPARE PARTS

A. Complete set gaskets and O-ring seals and complete set of dowels, keys, pins, etc. for each blower. Also provide a complete set of any special tools required to dismantle the blowers.

1. V-belts: One complete set of belts for each blower.

2. Filter Elements: Two for each blower.

3. One volume of oil for each blower for the first service interval.

B. Spare parts shall be suitably marked for identification and packed in a single hinge covered box.

2.10 LOCAL CONTROL PANEL

A. Each blower shall have a local control panel with a human machine interface (HMI). Display shall be a color touch screen.

B. Each control panel shall provide the following control functions and features:

1. Intuitive TFT color touch screen display

2. Display, monitoring, alarm, and shutdown of inlet pressure, discharge pressure, discharge temperature, enclosure cooling fan thermal overload, main drive motor thermal overload, oil temperature and oil pressure, run hours.

3. Log errors and first out indication

4. Track and log maintenance

5. E-Stop button mounted on front of blower enclosure

6. Operation of enclosure cooling fan motor starter and oil demister

7. Ability to transfer measured values, fault and status messages, as well as remaining times of the service intervals to the customer control system via Modbus RTU or Ethernet IP.

8. Permissive control function of customer start and stop signals to a motor controller

9. Digital potentiometer

    a. LOCAL Operation: speed control of the VFD via the HMI screen.
    b. REMOTE Operation: transfer of VFD speed command from external controller to the VFD
    c. These signals can be communicated using either hard wire connection or the communication protocol

10. Control Enclosure

    a. IP54 suitable for indoor/outdoor installation
    b. Factory installed, integral to sound enclosure

11. Control Supply Power

    a. 460 VAC, 10 Amp feed with 24 VDC transformer

C. Local control panel shall be Aerzeb AERtronic Digital Controller.

PART 3 EXECUTION

3.01 PREPARATION FOR SHIPMENT, SHIPMENT, AND PROTECTION

A. Equipment shall be prepared and protected for shipment and shipped in accordance with the requirements of Section 01 66 00, PRODUCT SHIPMENT, HANDLING, STORAGE, AND PROTECTION of Division 01 00 00, GENERAL REQUIREMENTS. In addition, the following shall be done:

1. After testing and before dismantling for shipment, all wiring and mechanical connections shall be matchmarked or tagged to ensure proper field assembly.

2. The Contractor shall make arrangements for extra protection until final installation if units are to be stored outside.

B. Insofar as is practical, the equipment specified herein shall be factory assembled. The intake filter, inlet silencer, blower, motor, drive, drive guard,

discharge silencer, valves, interconnecting piping, supports and all other accessories shall be shipped assembled on the base to the extent allowable by trucking. The parts and assemblies that are of necessity shipped unassembled shall be packaged and tagged in a manner that will protect the equipment from damage and facilitate the final assembly in the field.

C. Each blower shall receive its initial oil filling at the factory. Oil shall be fully synthetic and rated for 16,000 hours of operation between change intervals.

3.02 GENERAL

A. Care during storage and procedures for installation, lubrication and startup of the blowers and motors shall be in strict conformance with the manufacturer's instructions.

3.03 BLOWER INSTALLATION

A. Install the blowers and accessories in accordance with the blower manufacturer's directions, the Drawings, and these Specifications. The installation shall be supervised by a manufacturer's representative and shall be approved by this representative prior to operating the blowers.

B. Handle carefully and protect the blowers and appurtenances to avoid damaging the equipment. Bases shall be installed true and level on the concrete pads provided in accordance with the details shown on the Drawings. Level bases by means of shims or levelling nuts, and then grout in place with a pourable or tamped-in grout as specified in Section 03 30 00, CONCRETE.

C. Install the blowers so that connection may be made to the discharge headers without any springing or otherwise forcing either the blower or the header. Adjust blower assemblies such that the units are properly aligned, plumb, and level. Carefully fit and coat all bolt threads with lubricant to facilitate future removal.

D. All strain from attached piping shall be eliminated from the blowers. Any evidence of blower misalignment, unusually noisy operation, or other signs of improper setting shall be corrected by the Contractor.

E. The equipment shall be provided with all necessary factory lubrication. Before initial startup at final installation, lubrication for all bearings, etc. shall be checked in accordance with the blower and/or motor manufacturer’s recommendations.

F. All final electrical connections shall be made by the Electrical Sub-contractor.

3.04 FACTORY TESTS

A. Blowers: A factory test certified by the blower manufacturer shall be performed on each of the blowers actually furnished, and written notice of the same shall be furnished to the Engineer. Test data shall be furnished to show conformance to the specified performance.

B. Motor Tests and Test Reports:

1. Short commercial tests shall be made, including no-load current at rated voltage, high potential, and locked rotor current.

2. Certified copies of test reports for one motor in the group being furnished shall be provided Engineer for review.

C. Balance of Vibration: The rotating parts of each blower and its driving unit shall be dynamically balanced before final assembly. The driving unit alone shall operate without vibration in excess of the limits stated in the latest revision of NEMA MG 1.

3.05 FIELD TESTS

A. Functional Test: Prior to plant or blower system startup, all equipment described herein shall be inspected for proper alignment, proper operation, proper connection, proper power draw, and satisfactory performance by means of a functional test.

B. Functional and Performance Testing:

1. The Contractor, with the assistance of the blower manufacturer's representative, shall perform field performance tests on all of the blower assemblies to demonstrate their conformance to the Specifications to the satisfaction of the Engineer. A test log shall be presented to the Engineer upon the completion of each test that records the following:

2. The Manufacturer shall perform a physical check of the blower installation, perform safety checks, power up the equipment and perform functional testing.

3. The functional test shall consist of 4 hours of operation of each blower with vibration, temperature, and pressure readings as well as motor amp readings taken and recorded at 60-minute intervals. In addition, the following shall be logged:

a. Air flow, as measured by plant instrumentation and/or manufacturer provided instruments for at least three different blower speeds.
b. Blower discharge pressures as measured by calibrated gauges provided with the units for at least three different blower speeds.
c. Blower discharge temperatures as measured by calibrated gauges provided with the units for at least three different blower speeds.
d. Driving motor voltage and amperage measured for each phase for at least three different blower speeds.

4. Installed noise measurements shall be taken to compare the installed noise values with the factory free field ISO 2151 measurements.

5. Units failing to meet the Specifications to the satisfaction of the Engineer must be replaced or more accurately tested. If the blower fails the second test, the unit will be rejected, and the Contractor shall furnish a unit that will perform as specified. Testing and blower replacement shall be accomplished at no additional cost to the Owner.

3.06 MANUFACTURER'S CERTIFICATE(S)

A. Provide manufacturer's certificate(s) in accordance with Section 01 66 40, MANUFACTURERS' SERVICES of Division 01 00 00, GENERAL REQUIREMENTS.

B. Submit the following items:

1. Manufacturers' Certification of Proper Installation certifying that the equipment; (1) has been properly installed and lubricated; (2) is in accurate alignment; (3) is free from any undue stress imposed by connecting piping or anchor bolts; and (4) is in compliance with any conditions listed herein.

2. Functional and Performance Test Certification.

END OF SECTION 43 20 10

(This page intentionally left blank)